Fuji Electric

Innovating Energy Technology

High-Performance, Multi-Function Inverter

FRENIC-MEGA (G2) Series

User's Manual

⚠CAUTION

Thank you for purchasing our FRENIC-MEGA series of high-performance, multi-function inverters.

- This product is designed to drive a three-phase motor under variable speed control. Read through this user's manual and become familiar with the handling procedure for correct use.
- Incorrect handling may hinder normal operation, or result in a shortening of the product life or failure.
- Deliver this manual to the end user of this product.
- Keep this manual in a safe place until this product is discarded.
- For how to use an optional device, refer to the instruction and installation manuals for that optional device.

The English version of this document can be downloaded from the following site.

https://www.fujielectric.com/products/drive-download/

The Chinese version of this document can be downloaded from the following site.

https://www.fujielectric.com.cn/download_list.php

24A7-E-0162b

Copyright © 2022-2024 Fuji Electric Co., Ltd.

All rights reserved.

The copyright for this User's Manual lies with Fuji Electric Co., Ltd.

The unauthorized reproduction or reprinting of this instruction manual, in part or in full, is prohibited.

The names of companies and products mentioned in this manual are generally trademarks or registered trademarks of the relevant companies.

The information contained herein is subject to change without prior notice for improvement.

Every effort has been made to ensure the accuracy of the content of this manual, however, please contact your dealer or relevant Fuji Electric sales office at the end of this manual if there is anything that is unclear, or if any errors and so on are found.

Preface

Thank you for purchasing our “FRENIC-MEGA” series of high-performance, multi-function inverters. This product is designed to drive a three-phase motor under variable speed control.

This manual provides all the information on the FRENIC-MEGA series of inverters including its operating procedure and selection of peripheral equipment. Read this User's Manual carefully beforehand to ensure correct use. Incorrect handling may hinder normal operation, or result in a shortening of the product life or failure.

FRENIC-MEGA related documents are listed in the following table. Please refer to these documents based on the purpose.

Name	Document No.	Description
Catalog	24A1-E-0166□	Product overview, features, specifications, outline drawings, options, etc.
Instruction Manual	INR-SI47-2392□-E	Instruction manual packaged with the product
	INR-SI47-2442□-E	Instruction Manual for Multi-function Keypad (TP-A2SW)
RS-485 Communication User's Manual	24A7-E-0082□	Overview of functions implemented by using FRENIC-Series RS-485 communications facility, its communications specifications, Modbus RTU/Fuji general-purpose inverter protocol, function codes and related data formats

Revisions are made to the above documents whenever required, and therefore the latest version should be obtained before use.

How this manual is organized

This manual is configured as follows.

Chapter 1 BEFORE USE

This chapter describes the items to checked before the use of the inverter.

Chapter 2 INSTALLATION AND WIRING

This chapter describes the important points in installing and wiring inverters.

Chapter 3 OPERATION USING THE KEYPAD

This chapter describes inverter keypad operation. If using the Multi-function keypad, refer to Instruction Manual for Multi-function Keypad (TP-A2SW).

Chapter 4 TEST RUN PROCEDURE

This chapter describes basic settings required for making a test run.

Chapter 5 FUNCTION CODES

This chapter explains the table of function codes used in FRENIC-MEGA, and details of each function code.

Chapter 6 TROUBLESHOOTING

This chapter describes troubleshooting procedures to be followed when the inverter malfunctions or detects an alarm or a light alarm condition. In this chapter, first check whether any alarm code or the "light alarm" indication (l-al) is displayed or not, and then proceed to the troubleshooting items.

Chapter 7 MAINTENANCE AND INSPECTION

This chapter describes the maintenance and inspection items of the inverter.

Chapter 8 BLOCK DIAGRAMS FOR CONTROL LOGIC

This chapter describes the main block diagrams of the control section.

Chapter 9 COMMUNICATION FUNCTIONS

This chapter describes an overview of inverter operation through the RS-485 and CANopen communications. For details on RS-485 communication, refer to the RS-485 Communication User's Manual (24A7-E-0082).

Chapter 10 SELECTING OPTIMAL MOTOR AND INVERTER CAPACITIES

This chapter provides you with information about the inverter output torque characteristics, capacity selection procedure, and equations for calculating capacities to help you select optimal motor and inverter models. It also helps you select braking resistors, inverter specification (HHD/HND/HD/ND), and motor drive control.

Chapter 11 SELECTING PERIPHERAL EQUIPMENT

This chapter describes how to use a range of peripheral equipment and options, FRENIC-MEGA's configuration with them, and requirements and precautions for selecting wires and crimp terminals.

Chapter 12 SPECIFICATIONS

This chapter describes the inverter output ratings.

Chapter 13 EXTERNAL DIMENSIONS

This chapter gives external dimensions of the inverter.

APPENDICES

CONTENTS

Chapter 1 BEFORE USE
1.1 Acceptance Inspection (Nameplate and Inverter Type) 1-1
1.2 Product External Appearance 1-3
1.3 Precautions for Using Inverters 1-5
1.3.1 Usage environment 1-5
1.3.2 Storage environment 1-8
[1] Temporary storage 1-8
[2] Long-term storage 1-8
1.3.3 Precautions for connection of peripheral equipment 1-9
[1] Phase-advancing capacitors for power factor correction 1-9
[2] Power supply lines (application of DC/AC reactors) 1-9
[3] DC reactor (DCR) for correcting the inverter input power factor (for suppressing harmonics) 1-9
[4] PWM converter for correcting the inverter input power factor 1-10
[5] Molded case circuit breakers (MCCB)/earth leakage circuit breakers (ELCB) 1-10
[6] Magnetic contactor (MC) in the inverter input (primary) circuit 1-10
[7] Magnetic contactor (MC) in the inverter output (secondary) circuit 1-10
[8] Surge absorber/surge killer 1-10
1.3.4 Noise reduction 1-11
1.3.5 Leakage current 1-11

Chapter 2 INSTALLATION AND WIRING
2.1 Installation 2-1
2.2 Wiring 2-4
2.2.1 Basic connection diagrams 2-4
2.2.2 Removal and attachment of the front cover and wiring guide 2-6
2.2.3 Wiring precautions 2-7
2.2.4 Precautions for long wiring (between inverter and motor) 2-9
2.2.5 Main circuit terminals 2-11
[1] Screw specifications (main circuit terminals) 2-11
[2] Terminal layout diagrams (main circuit terminals) 2-12
[3] Recommended wire size (main circuit terminals) 2-13
[4] Terminal function description (main circuit terminals) 2-24
2.2.6 Control circuit terminals (common to all models) 2-29
[1] Screw specifications and recommended wire size (control circuit terminals) 2-29
[2] Terminal layout diagram (control circuit terminals) 2-29
[3] Control circuit wiring precautions 2-30
[4] Description of terminal functions (control circuit terminals) 2-31
2.2.7 Switching switches 2-42
2.3 Mounting and Removing the Keypad 2-45

Chapter 3 OPERATION USING THE KEYPAD
3.1 Name and Function of Each Keypad Part 3-1
3.1.1 Keypad (TP-E2) 3-1
3.1.2 Multi-function keypad (TP-A2SW) 3-3
3.2 Overview of Operation Modes 3-7
3.2.1 Keypad (TP-E2) 3-7
3.2.2 Multi-function keypad (TP-A2SW) 3-8
3.3 Running Mode 3-9
3.3.1 Operating state monitor 3-9
3.3.2 Status display 3-12

3.3.3 Monitoring warnings 3-13
3.3.4 Running or stopping the motor with the keypad 3-14
3.3.5 Setting the reference frequency with the keypad 3-14
3.3.6 Setting PID commands with the keypad 3-15
[1] Settings under PID process control 3-15
[2] Settings under PID dancer control 3-17
3.3.7 Jogging operation 3-19
3.3.8 Switching between local and remote modes 3-20
3.3.9 Changing the M/Shift key function 3-21
3.3.10 Display when keypad operation disabled (command source display) 3-21
3.4 Programming Mode 3-22
3.4.1 Setting function codes “Data Setting: 1.F_ _ to 1.P_ _” 3-23
3.4.2 Checking changed function codes “Data Checking: 2.rEP” 3-25
3.4.3 Monitoring the running status “Drive Monitoring: 3.oPE” 3-26
3.4.4 Checking I/O signal status “I/O Checking: 4.I_o” 3-32
3.4.5 Reading maintenance information “Maintenance Information: 5.CHE” 3-38
3.4.6 Reading alarm information “Alarm Information: 6.AL” 3-45
3.4.7 Copying data “Data Copying: 7.CPY” 3-49
3.4.8 Checking the status of communication with the host device
“Communication monitor: 9.S_ to 9.dAtA” 3-53
3.4.9 Setting “Favorites” function code data “Favorites: 0.FnC” 3-54
3.5 Alarm Mode 3-55
3.5.1 Releasing the alarm and switching to running mode 3-55
3.5.2 Displaying the alarm history 3-55
3.5.3 Displaying the status of inverter at the time of alarm 3-55
3.5.4 Switching to programming mode 3-55
3.6 USB Port 3-56

Chapter 4 TEST RUN PROCEDURE
4.1 Test Run Procedure Flowchart 4-1
4.2 Checking Prior to Powering On 4-2
4.3 Powering ON and Checking 4-3
4.4 Destination setting 4-4
4.4.1 Overview 4-4
4.4.2 Setting the initial destination 4-5
[1] When using the keypad (TP-E2) 4-5
[2] When using Multi-function keypad (TP-A2SW) 4-5
4.5 Switching the Applicable Motor Rating (HHD/HND/HD/ND Specifications) 4-6
4.6 Selecting the Motor Control Method 4-8
4.6.1 V/f control without slip compensation (induction motors) 4-8
4.6.2 V/f control with slip compensation (induction motors) 4-8
4.6.3 Dynamic torque vector control (induction motors) 4-9
4.6.4 V/f control with sensor (induction motors) 4-9
4.6.5 Dynamic torque vector control with sensor (induction motors) 4-9
4.6.6 Sensorless vector control (induction motors) 4-9
4.6.7 Vector control with sensor (induction motors) 4-10
4.6.8 Sensorless vector control (synchronous motors) 4-10
4.6.9 Vector control with sensor (synchronous motors) 4-11
4.7 Performance Comparison for Drive Controls (Summary) 4-12
4.8 Configuring Function Codes for Drive Controls 4-14
4.8.1 Induction motor operation 4-16
[1] If running the motor with simple V/f control 4-16

[2] If running the motor with V/f control with sensor 4-17
[3] If running the motor with V/f control with slip compensation, dynamic torque vector control, or sensorless vector control 4-19
[4] If running the motor with dynamic torque vector control with sensor or vector control with sensor 4-21
[5] Induction motor tuning method 4-23
4.8.2 Synchronous motor operation 4-26
[1] If running the motor with sensorless vector control (synchronous motors) 4-26
[2] If driving the motor under vector control with sensor (synchronous motors) 4-29
[3] Synchronous motor tuning method 4-35
4.8.3 Motor temperature protection setting 4-39
[1] Electronic thermal overload relay (for motor 1 protection) 4-39
[2] Motor protection with thermistor 4-39
4.9 Setting function codes when switching from a conventional model 4-40
4.9.1 Switching from FRENIC-MEGA (G1S) 4-40
[1] Copying function codes using the keypad 4-40
[2] Entering function codes directly from the keypad 4-40
[3] Entering function codes from PC Loader 4-41
4.9.2 Switching from FRENIC5000G11S/P11S or FRENIC5000G9S/P9S 4-41
4.10 Operation Check 4-42
4.10.1 Test run procedure 4-42
4.10.2 Check points during a test run 4-42
4.10.3 Adjusting the function code for motor control 4-43
4.11 Selecting a Frequency Command Source 4-45
4.11.1 Setting the frequency from the keypad 4-45
4.11.2 Setting the frequency with an external potentiometer (variable resistor) 4-46
4.11.3 Setting the frequency with multistep frequency selection (1 speed, 2 speed, etc.) 4-47
4.12 Selecting a Run Command Source 4-48
4.12.1 Setting run commands from the keypad 4-48
4.12.2 Setting run commands with external signals (terminal [FWD, [REV]) 4-48

Chapter 5 FUNCTION CODES
5.1 Function Codes Overview 5-1
5.2 Function Code Tables 5-2
5.2.1 Supplementary note 5-2
5.2.2 Function code tables 5-4
[1] F codes: Fundamental functions 5-4
[2] E codes: Extension Terminal Functions (terminal functions) 5-8
[3] C codes: Control Functions of Frequency (Control function) 5-20
[4] P codes: Motor 1 Parameters (Motor 1 parameters) 5-22
[5] H codes: High Performance Functions (High level functions) 5-24
[6] H1 codes: High Performance Functions (High level functions) 5-28
[7] A codes: Motor 2 Parameters (Motor 2 parameters) 5-30
[8] b codes: Motor 3 Parameters (Motor 3 parameters) 5-33
[9] r codes: Motor 4 Parameters (Motor 4 parameters) 5-35
[10] J codes: Application Functions (Application function) 5-37
[11] J1 codes: Application Functions (Application function) 5-39
[12] J2 codes: Application Functions (Application function) 5-43
[13] J4 codes: Application Functions (Application function) 5-44
[14] J5 codes: Application Functions (Application function) 5-46
[15] J6 codes: Application Functions (Application function) 5-47
[16] d codes: Application Functions 2 (Application functions 2) 5-49
[17] d1 codes: Application Functions 2 (Application functions 2) 5-52

[18] d2 codes: Application Functions 2 (Application functions 2) 5-54
[19] U codes: Customizable logic Functions (Customizable logic Functions) 5-56
[20] U1 codes: Customizable logic Functions (Customizable logic Functions) 5-61
[21] y codes: LINK Functions (Link functions)..... 5-62
[22] o codes: Option Functions (Option functions)..... 5-64
[23] o1 codes: Option Functions (Option functions)..... 5-67
[24] o2 codes: Option Functions (Option functions)..... 5-68
[25] T codes: Timer Functions (Scheduled operations)..... 5-69
[26] K codes: Keypad functions (Keypad functions) 5-70
5.3 Description of Function Codes..... 5-84
5.3.1 F codes (Fundamental functions)..... 5-84
[1] Setting the frequency with the keypad (F01 = 0 or 8) 5-86
[2] Setting the frequency with analog input (F01 = 1 to 3, 5, 6) 5-87
[3] Frequency setting by digital input signal “UP”/“DOWN” (F01=7) 5-94
[4] Frequency setting using digital input (option DI interface card) (F01 = 11)..... 5-95
[5] Frequency setting using pulse train input (F01 = 12)..... 5-96
5.3.2 E codes (Extension terminal functions) 5-155
5.3.3 C codes (Control functions)..... 5-220
5.3.4 P codes (Motor 1 parameters)..... 5-232
5.3.5 H codes (High performance functions)..... 5-243
[1] Measuring the capacitance of DC link bus capacitor in comparison with initial one at shipment 5-263
[2] Measuring the capacitance of DC link bus capacitor under ordinary operating conditions at power shutdown..... 5-264
5.3.6 H1 codes (High performance functions)..... 5-286
5.3.7 A, b, r codes (Motor 2 to 4 parameters) 5-294
5.3.8 b, r codes (Speed control 3 and 4 parameters)..... 5-299
5.3.9 J codes (Applied functions)..... 5-300
[1] PID command with keypad (J02 = 0, J102, J202 = 0) 5-302
[2] PID command by analog inputs (J02=1, J102 = 1, J202 = 1,2) 5-303
[3] PID command with UP/DOWN control (J02 = 3) 5-304
[4] PID command via communications link (J02 = 4, J102, J202 = 4) 5-305
[5] Overload stop function..... 5-318
[6] Brake control signal 5-320
5.3.10 J1 codes (Applied functions)..... 5-327
5.3.11 J2 codes (Applied functions)..... 5-358
5.3.12 J4 codes (Applied functions)..... 5-360
[1] Pump control motor drive permission command 1 to 8 for pump control motors (“MEN1” to “MEN8”)..... 5-385
[2] PID control operation 5-386
[3] Motors subject to motor run time switching..... 5-391
[4] Canceling the regular switching operation 5-391
[5] Regular switching with input terminal..... 5-392
5.3.13 J5 codes (Applied functions)..... 5-400
[1] External PID commands with keypad (J502, J602, J652 = 0)..... 5-402
[2] External PID commands with UP/DOWN control (J502, J602, 2 = 3)..... 5-403
[3] External PID commands from communication 5-403
[4] PID commands with analog input (J502, J602, J652＝51) 5-404
5.3.14 J6 codes (Applied functions)..... 5-427
5.3.15 d codes (Applied functions 2)..... 5-430
[1] Speed control 5-430
[2] Line speed control 5-440

[3] Master-follower operation 5-443
5.3.16 d1 codes (Applied functions 2) 5-472
[1] Hoist function 5-478
5.3.17 d2 codes (Applied functions 2) 5-485
[1] Position control 5-485
[2] Setting example for conveyor performing sizing by position control 5-502
5.3.18 U codes (Customizable logic operation) 5-512
5.3.19 U1 codes (Customizable logic operation) 5-512
5.3.20 y codes (Link functions) 5-556
5.3.21 o/o1/o2 codes (Option functions) 5-564
5.3.22 T codes Timer Functions (Scheduled operations) 5-565
5.3.23 K codes (Keypad functions) 5-568

Chapter 6 TROUBLESHOOOTING
6.1 Protective Functions 6-1
6.2 Before Proceeding with Troubleshooting 6-3
6.3 If an Alarm Code Appears on the LED Monitor 6-4
6.3.1 Alarm code list 6-4
6.3.2 Causes, checks and measures of alarms 6-8
[1] CA1 to CA5 User-defined alarm 6-8
[2] CoF Current input terminals [C1], [C2] disconnect detection 6-8
[3] dbA Braking transistor failure 6-8
[4] dbH Braking resistor overheat 6-9
[5] ECF STO input (EN1,EN2) circuit failure 6-9
[6] ECL Customizable logic error 6-10
[7] EF Ground fault protection (FRN0032G2S-2G/FRN0018G2□-4G or above) 6-10
[8] Er1 Memory error 6-10
[9] Er2 Keypad communications error 6-11
[10] Er3 CPU error 6-11
[11] Er4 Option communications error 6-11
[12] Er5 Option error 6-11
[13] Er6 Operation protection 6-12
[14] Er7 Tuning error 6-13
[15] Er8 RS-485 communications error (Communication port 1)/
ErP RS-485 communications error (Communication port 2) 6-14
[16] Erd Out-of-step detection 6-15
[17] ErC Magnetic pole position detection error 6-16
[18] ErE Speed mismatch / Excessive speed deviation 6-17
[19] ErF Data saving error during undervoltage 6-18
[20] ErH Hardware error 6-18
[21] Ero Positioning control error 6-18
[22] Err Mock alarm 6-19
[23] FUS Fuse blown 6-19
[24] FAL DC fan locked 6-19
[25] Lin Input phase loss 6-19
[26] LoP Password protection 6-20
[27] LU Undervoltage 6-20
[28] nrb NTC thermistor wire disconnection 6-20
[29] OCn Instantaneous overcurrent 6-21
[30] OH1 Heat sink overheat 6-22
[31] OH2 External alarm 6-22
[32] OH3 Inverter internal overheat 6-22
[33] OH4 Motor protection (PTC/NTC thermistor) 6-23

[34] OHb Charging resistor overheat 6-23
[35] OLn Overload of motors 1 through 4 6-24
[36] OLU Inverter overload 6-25
[37] OPL Output phase loss 6-26
[38] OS Overspeed 6-26
[39] OUn Overvoltage 6-27
[40] PbF Charge circuit fault (FRN0008G2S-2G/FRN0004G2□-4G or above) 6-27
[41] PG PG wire disconnection 6-28
[42] dO Excessive positioning deviation 6-28
[43] Fod forced operation (Fire Mode) 6-28
[44] FoL Filter clogging error 6-29
[45] PUn PID control feedback error 6-29
[46] PUn External PID feedback error 6-30
[47] Pdr Drought protection 6-31
[48] PoL End of curve protection (PID control 1) 6-32
[49] rLo Anti jam (PID control 1) 6-32
[50] roC Control of maximum starts per hour (PID control 1) 6-32
6.4 If a Warning Code is Displayed 6-33
6.4.1 Warning code list 6-33
6.4.2 Warning cause and check 6-34
[1] CnT Machine life (Number of startups) 6-34
[2] iGb IGBT lifetime alarm 6-34
[3] L iF Lifetime alarm 6-34
[4] OH Heat sink overheat early warning 6-34
[5] OL Motor overload early warning 6-34
[6] P id PID alarm 6-35
[7] PTC PTC thermistor activated 6-35
[8] rAF Cooling capability drop 6-35
[9] rEF Reference command loss detected 6-35
[10] rTE Machine life (Cumulative motor running hours) 6-35
[11] UtL Low torque detection 6-36
[12] Lob Low battery warnig (for Multi-function Keypad (TP-A2SW)) 6-36
[13] PA1, PA2 PID control 1, 2 warning output 6-36
[14] PAA, PAb, PAC External PID control 1, 2, 3 warning output 6-36
[15] SLA Slave alarm 6-36
6.5 Other Errors 6-37
6.5.1 Abnormal motor operation 6-37
[1] The motor does not rotate 6-37
[2] The motor rotates, but the speed does not increase 6-39
[3] The motor runs in the opposite direction to the command 6-40
[4] Speed fluctuation or current oscillation (e.g., hunting) occurs during running at constant speed 6-41
[5] Unpleasant noises are emitted from motor or noises fluctuate 6-42
[6] Motor is not accelerated or decelerated according to set-up acceleration or deceleration times 6-43
[7] The motor does not restart even after the power recovers from a momentary power failure 6-44
[8] Motor generates heat abnormally 6-44
[9] The motor does not run as expected 6-44
[10] Motor stalls during acceleration 6-45
6.5.2 Problems with inverter settings 6-46
[1] Nothing appears on the keypad 6-46

[2] The desired menu is not displayed 6-46
[3] Display of under bars (_ _ _ _ _) 6-46
[4] Display of center bars (- - - - -) 6-47
[5] [ ] Display of parenthesis 6-47
[6] Data of function codes cannot be changed 6-47
[7] Function code data are not changeable (change from link functions) 6-48
[8] En.OFF appears 6-48
[9] Other status display 6-48

Chapter 7 MAINTENANCE AND INSPECTION
7.1 Inspection Interval 7-2
7.2 Daily Inspection 7-3
7.3 Periodic Inspection 7-4
7.3.1 Periodic inspection 1--Before the inverter is powered ON or after it stops running 7-4
7.3.2 Periodic inspection 2--When the inverter is ON or it is running 7-6
7.4 List of Periodic Replacement Parts 7-7
7.4.1 Judgment on service life 7-8
[1] Measuring the capacitance of DC link bus capacitor in comparison with initial value at time of shipment 7-10
[2] Measuring the capacitance of the DC link bus capacitor under ordinary operating conditions 7-11
[3] Early warning of lifetime alarm 7-11
7.5 Measuring the Amount of Electricity in Main Circuit 7-12
7.6 Insulation Test 7-13
7.6.1 Megger test of main circuit 7-13
7.6.2 Insulation test of control circuit 7-13
7.6.3 Insulation test of external main circuit and sequence control circuit 7-13
7.7 Product Inquiries and Warranty 7-14
7.7.1 Inquiry request 7-14
7.7.2 Product warranty 7-14
[1] Free of charge warranty period and warranty range 7-14
[2] Exclusion of liability for loss of opportunity, etc. 7-15
[3] Repair period after production stoppage, spare parts supply period (maintenance period) 7-15
[4] Delivery conditions 7-15
[5] Service description 7-15
[6] Applicable scope of service 7-15

Chapter 8 BLOCK DIAGRAMS FOR CONTROL LOGIC
8.1 Meanings of Symbols Used in the Control Block Diagrams 8-1
8.2 Frequency Setting Section 8-2
8.3 Operation Command Section 8-5
8.4 PID Control Section (for Processing) 8-6
8.5 PID Control Section (for Dancer) 8-7
8.6 PID Control Section (for Air Conditioning and Pump) 8-8
8.7 External PID control (for processing) 8-10
8.8 Position Control Section 8-12
8.9 Control Section 8-13
8.9.1 V/f control 8-13
[1] Common 8-13
[2] Without speed sensor 8-14
[3] With speed sensor 8-15
8.9.2 Vector control 8-16
[1] Common 8-16

[2] Torque command / torque limit 8-17
[3] Speed control / torque control 8-18
[4] Speed limit and over speed protection processing 8-19
[5] Motor drive 8-20
[6] Vector control: Synchronous motor drive 8-21
8.10 FM Output Section 8-23

Chapter 9 COMMUNICATION FUNCTIONS
9.1 Overview of RS-485 Communication 9-1
9.1.1 RS-485 common specifications 9-2
9.1.2 RS-485 communication terminal specifications 9-3
[1] RS-485 COM port 1 (RJ-45 connector for keypad connection) specification 9-3
[2] RS-485 COM port 2 (terminal block) specifications 9-3
9.1.3 Connection method 9-4
9.1.4 RS-485 connection devices 9-6
[1] Converter 9-6
[2] Requirements for the cable (COM port 1: for RJ-45 connector) 9-6
[3] Requirements for the cable (COM port 2: for RS-485 terminal block connection) 9-6
[4] Branch adapter for multi-drop 9-6
9.1.5 RS-485 noise suppression 9-7
9.2 FRENIC Loader Overview 9-8
9.2.1 Specifications 9-8

Chapter 10 SELECTING OPTIMAL MOTOR AND INVERTER CAPACITIES
10.1 Motor Output Torque Characteristics 10-1
10.2 Selection Procedure 10-3
10.3 Equations for Selections 10-6
10.3.1 Load torque during constant speed running 10-6
[1] General equation 10-6
[2] Obtaining the required force F 10-6
10.3.2 Acceleration and deceleration time calculation 10-8
[1] Calculation of moment of inertia 10-8
[2] Calculation of the acceleration time 10-10
[3] Calculation of the deceleration time 10-11
[4] Calculating non-linear acceleration/deceleration time 10-11
[5] Calculating non-linear deceleration time 10-12
10.3.3 Heat energy calculation of braking resistor 10-13
[1] Calculation of regenerative energy 10-13
10.3.4 Calculating the RMS rating of the motor 10-14
10.4 Selecting the Inverter Rating Specification (HHD/HND/HD/ND) 10-15
10.4.1 Precautions in making the selection 10-15
10.4.2 Guideline for selecting inverter specification and capacity 10-16

Chapter 11 SELECTING PERIPHERAL EQUIPMENT
11.1 Configuring the FRENIC-MEGA 11-1
11.2 Size of Current for Each Part of the Inverter 11-2
11.3 Molded Case Circuit Breakers (MCCB), Earth Leakage Circuit Breakers (ELCB) and Magnetic Contactors (MC) 11-5
11.3.1 Function Overview 11-5
11.3.2 Connection Example and Criteria for Selection of Circuit Breakers 11-6
11.4 Lightning Surge Protection Device SPD 11-12
11.5 Filter Capacitors for Suppressing AM Radio Band Noise 11-13
11.6 Braking Resistors (DB) and Braking Units 11-14

11.6.1 Selecting a Braking Resistor 11-14
[1] Selection procedure 11-14
[2] Notes on selection 11-14
11.6.2 Overview of Braking Resistors (DB) and Braking Units 11-15
[1] Standard type 11-15
[2] 10%ED type 11-15
[3] Overview of braking unit 11-16
11.6.3 Specification 11-17
11.6.4 External dimensions 11-21
11.7 High Power Factor Power Supply Regeneration PWM Converters (RHC Series) 11-23
11.7.1 Overview 11-23
11.7.2 Specification 11-24
[1] Standard specification 11-24
[2] Common Specifications 11-28
11.7.3 Function Specifications 11-30
11.7.4 Device Configuration 11-35
11.7.5 External Dimensions 11-38
11.8 Compact Power Regeneration PWM Converter 11-47
11.8.1 Specifications 11-47
[1] Standard specification 11-47
[2] Common specifications 11-48
[3] Terminal functions 11-49
11.8.2 Device Configuration 11-51
[1] Device configuration table 11-51
[2] Basic connection diagrams 11-52
11.8.3 External Dimensions 11-53
11.8.4 Peripheral Equipment 11-55
11.9 DC Reactors (DCRs) 11-60
11.10 AC Reactors (ACRs) 11-66
11.11 Output Circuit Filters (OFL) 11-72
11.12 Zero-phase Reactors for Suppressing Radio Noise (ACL) 11-75
11.13 External Cooling Fan Attachments 11-76
11.14 IP40 Compatibility Attachment (P40ST-F□1) 11-78
11.15 External Frequency Command Potentiometer (External) 11-80
11.16 Extension Cable for Remote Operation 11-81
11.17 Selecting Measurement Options 11-82
11.17.1 Frequency meters 11-82
11.18 Control Terminal Block (G1S Compatible) OPC-G1-TB1 11-83
11.19 Built-in Option Card Types and Ports in Which They Can be Installed 11-84
11.19.1 T-Link Communication Card (OPC-TL) 11-86
11.19.2 SX-bus Communication Card (OPC-SX) 11-90
11.19.3 PROFIBUS-DP Communication Card (OPC-PDP2) 11-93
11.19.4 CANopen Communication Card (OPC-COP2) 11-96
11.19.5 DeviceNet Communication Card (OPC-DEV) 11-99
11.19.6 CC-Link Communication Card (OPC-CCL) 11-103
11.19.7 Multiprotocol Ethernet® Communication Card (OPC-ETM) 11-105
11.19.8 Digital Input Interface Card (OPC-DI) 11-109
11.19.9 Digital Output Interface Card (OPC-DO) 11-112
11.19.10 Analog Interface Card (OPC-AIO) 11-115
11.19.11 Analog current output (2ch) interface card (OPC-AO) 11-121
11.19.12 Resistance temperature detector input card (OPC-PT) 11-123
11.19.13 Relay Output Interface Card (OPC-RY) 11-126
11.19.14 Relay output interface card (OPC-RY2) 11-128

11.19.15 PG Interface Card (OPC-PG) 11-130
11.19.16 PG Interface (5 V Line Driver) Card (OPC-PG2) 11-133
11.19.17 PG Interface (5 V Line Driver x 2 Systems) Card (OPC-PG22) 11-137
11.19.18 PG Interface Card for Synchronous Motor with Sensor (OPC-PMPG2) 11-140
11.20 Multi-function Keypad (TP-A2SW) 11-142

Chapter 12 SPECIFICATIONS
12.1 Standard Specifications 1 (Basic Type) 12-1
12.1.1 Three-phase 200V series 12-1
12.1.2 Three-phase 400 V series 12-4
12.2 Standard Specifications 2 (Type with Built-in EMC Filter) 12-11
12.2.1 Three-phase 400V series 12-11
12.3 Common Specifications 12-18

Chapter 13 EXTERNAL DIMENSIONS
13.1 Standard Specification, Semi-standard Specification 13-1
13.2 Keypad 13-21

APPENDICES
Appendix A Trouble-free Use of Inverters (Notes on Electrical Noise) 1
A.1 Effect of inverters on other devices 1
[1] Effect on AM radios 1
[2] Effect on telephones 1
[3] Effect on pressure sensors 1
[4] Effect on position detectors (pulse encoders) 1
[5] Effect on proximity switches 1
A.2 Noise 2
[1] Inverter Operating Principle and Noise 2
[2] Types of noise 3
A.3 Measure 5
[1] Noise prevention prior to installation 5
[2] Implementation of noise prevention measures 6
[3] Noise prevention examples 9
Appendix B Japanese Guideline for Suppressing Harmonics by Customers Receiving High Voltage or Special High Voltage (General-purpose Inverters) 13
B.1 Application of general-purpose inverters 13
[1] Application for Other Than Special Customers 13
[2] Application for "Guideline for Suppressing Harmonics by Customers Receiving High Voltage or Special High Voltage" 13
B.2 Complying with "Guideline for Suppressing Harmonics by Customers Receiving High Voltage or Special High Voltage" 15
[1] Calculation of equivalent capacity (Pi) 15
[2] Harmonic Current Calculation 16
[3] Examples of calculation 18
Appendix C Effect on Insulation of General-purpose Motors Driven with 400 V Class Inverters 19
C.1 Generating mechanism of surge voltages 19
C.2 Effect of surge voltages 20
C.3 Countermeasures against surge voltages 21
[1] Suppressing surge voltages 21
[2] Using motors with enhanced insulation 21
C.4 Regarding existing equipment 21
[1] In case of a motor being driven with 400 V class inverter 21
[2] In case of an existing motor driven using a newly installed 400 V class inverter 21

Appendix D Inverter Generating Loss 22
Appendix E Conversion to other than SI Units 23
E.1 Conversion of units 23
E.2 Calculation formulas 24
Appendix F Permissible Current of Insulated Wires 25
Appendix G Conformity with Standards 28
G.1 Compliance with European Standards (CE) 28
[1] Compliance with EMC standards 28
[2] Compliance with European Low Voltage Directive 33
G.2 Harmonic Component Regulations in EU 44
[1] General comments 44
[2] Compliance with the harmonic component regulation 44
G.3 Compliance with UL Standards and Canadian Standards (cUL certification) 45
[1] General comments 45
[2] UL Standards and Canadian Standards (cUL Certification) Compatibility 45
G.4 Compliance with Functional Safety Standards 53
[1] General 53
[2] Notes for compliance with functional safety standards 55
[3] Inverter output status when STO is activated 56
[4] ECF alarm and inverter-output status 57
[5] Precautions for releasing STO 58
Appendix H Inverter Replacement Precautions (When Using PWM Converter (RHC series)) 59
H.1 Applicable inverters 59
H.2 Changing the connection method (inverter control power auxiliary input terminals (R0, T0)) 60

■ Safety precautions

Be sure to read this User's Manual thoroughly prior to installation, wiring (connection), operation, maintenance, or inspection to ensure correct use of the product. Furthermore, ensure a thorough understanding of device knowledge, safety information, as well as all related precautions.

Safety precautions contained in this User's Manual have been categorized as follows.

⚠WARNING	Indicates possible danger, leading to death or serious injury if the product is handled incorrectly.
⚠CAUTION	Indicates possible danger, leading to minor or moderate injury, or physical property damage only if the product is handled incorrectly.

Failure to heed the information contained under the CAUTION title may also result in serious consequences.

All items indicate important content and must therefore be observed.

Application

⚠WARNING

- The FRENIC-MEGA is a piece of equipment used to run three-phase induction motors and synchronous motors. It cannot be used for single-phase motors or other applications.

  Failure to observe this could result in fire or an accident.
- The FRENIC-MEGA cannot be used as is for applications which may have a direct effect on the human body such as life support machines.
- Strict quality control has been observed in the manufacture of this product, however, safety devices should be installed when the product is used for equipment which may result in a serious accident or loss in the event of failure.

  Failure to observe this could result in an accident.

Installation

⚠WARNING⚠

- Install on noncombustibles such as metal.
- Do not install near combustibles.

  Failure to observe this could result in fire.
- If using an optional DC reactor, there is a possibility of users coming into contact with main circuit terminal block parts (live parts). In such cases, take measures such as installing the product in a location where it will not easily come into contact with people.

  Failure to observe this could result in electric shock or injury.

⚠CAUTION

- Do not hold the surface cover when transporting the product.

  Failure to observe this could result in injury if the product is dropped.
- Take measures to prevent foreign material such as lint, wastepaper, wood shavings, dust, or metal scraps getting into the inverter, or adhering to the cooling fan.
- Use the specified screws for changing the mounting base.

  Failure to observe this could result in fire or an accident.
- Do not install or run inverters with damaged external or internal parts.

  Failure to observe this could result in fire, an accident, or injury.

Wiring

⚠WARNING⚠

- If no zero-phase current (earth leakage current) detective device such as a ground-fault relay is installed in the upstream power supply line in order to avoid the entire power supply system's shutdown undesirable to factory operation, install a residual-current-operated protective device (RCD)/earth leakage circuit breaker (ELCB) individually to inverters to break the individual inverter power supply lines only.
- Connect to the power supply via a molded case circuit breaker or earth leakage circuit breaker (with overcurrent protection function) for each inverter. Use the recommended molded case circuit breaker or earth leakage circuit breaker, and do not use devices that exceed the recommended capacity.
- Be sure to use the specified wire size.
- Tighten terminals with the prescribed tightening torque.
- If there are multiple inverter and motor combinations, do not use multi-core cables for the purpose of bundling and storing wiring for multiple combinations.
- Do not install a surge suppressor to the inverter output side (secondary side).
- Be sure to connect an optional DC reactor (DCR) when the capacity of the power supply transformer exceeds 500 kVA, and is at least 10 times the inverter rated capacity.

  Failure to observe this could result in fire.
- Ground the inverter in compliance with the national or local electric code.
- Be sure to ground the inverter ground terminal [⏚G] grounding wire.

  Failure to observe this could result in electric shock or fire.
- Wiring work should be carried out by qualified professionals.
- Carry out wiring work after ensuring that the power has been turned OFF.

  Failure to observe this could result in electric shock.
- Always carry out wiring after installing the unit.

  Failure to observe this could result in electric shock or injury.
- Ensure that the number of phases and rated voltage of the product input power supply matches that for the connected power supply.
- Do not connect the power lines to the inverter output terminals ([U], [V], [W]).
- When connecting a DC braking resistor (DBR), never connect it to terminals other than terminals [P(+)] and [DB].

  Failure to observe this could result in fire or an accident.
- Control signal lines generally do not have a reinforced insulation coating, and therefore if control signal lines come into contact with live parts of the main circuit, the insulation coating may be damaged for some reason. In such a case, there is a danger that high voltage from the main circuit will be applied to the control signal lines, and therefore care should be taken to ensure that they do not come into contact with live parts of the main circuit.

  Failure to observe this could result in an accident or electric shock.

⚠WARNING⚠

- Switch all switches after first waiting 5 minutes or longer for units of FRN0115G2S-2G/FRN0060G2□-4G or lower, or 10 minutes or longer for units of FRN0146G2S-2G/FRN0085G2□-4G or Higher after turning OFF the power, ensuring that the LED monitor and charge lamp are OFF, and use a device such as a tester to ensure that the DC intermediate circuit voltage across main circuit terminals [P(+)] and [N(-)] has dropped to a safe level (+25 VDC or less).

  Failure to observe this could result in electric shock.

⚠CAUTION

- The inverter, motor and wiring generate electric noise, which may cause nearby sensors and devices to malfunction. Employ noise countermeasures to prevent malfunction.

  Failure to observe this could result in an accident.

Operation

⚠ WARNING ⚠

- Be sure to attach the inverter surface cover before turning the power ON. Do not remove the surface cover while the power is ON.
- Do not operate the unit with wet hands.

  Failure to observe this could result in electric shock.
- If the product stops after being tripped when the retry function is selected, depending on the cause of the trip, the product will restart automatically, and the motor will rotate. Design the machinery so that human body and peripheral equipment safety is ensured even when the auto-resetting succeeds. Design machines in such a way as to ensure the safety of the human body and surrounding area even when operation is resumed.
- There may be times when the stall prevention function (torque limiting) causes the product to run at an acceleration/deceleration time or speed different from the set values. Design machines in such a way that safety is ensured even at such times.

  Failure to observe this could result in an accident.
- The keypad STOP key is enabled only when keypad operation is selected with function code F02. Please prepare a separate EMERGENCY STOP button. When function code H96 has been set to “0” or “2”, the STOP key will be disabled if the operation command method is changed from operation command with the keypad by selecting link operation "LE".
- If any of the protective functions has been activated, first remove the cause. Then, after checking that all run commands are set to OFF, release the alarm. If the alarm is released while any run command is set to ON, the inverter may supply the power to the motor, running the motor.

  Failure to observe this could result in an accident.
- By selecting the momentary power failure resume operation (F14 = 3 to 5), operation will resume automatically following recovery. Design machines in such a way as to ensure operator safety even when operation is resumed.
- Set function codes after ensuring a sufficient understanding of this User's Manual. If operation is performed after recklessly changing function code data, the motor may rotate at a torque and speed at which the machine is unable to tolerate.
- When auto tuning is started, the motor rotates. Conduct a sufficient check to ensure that there is no danger even when the motor rotates.

  Failure to observe this could result in an accident or injury.
- Even if the inverter cuts off the supply of power to the motor, if voltage is being applied to main power supply input terminals [L1/R], [L2/S], and [L3/T], voltage may be output to inverter output terminals [U], [V] and [W].
- Even if the motor is stopped by DC braking operation or pre-excitation operation, voltage will be output to the inverter output [U], [V] and [W] terminals.

  Failure to observe this could result in electric shock.
- Inverter high-speed operation settings can be specified easily. If settings are changed, use the product after sufficiently checking the motor and machine specification.

  Failure to observe this could result in injury.

⚠CAUTION

- The cooling fans and braking resistors become very hot. Do not touch.

  Failure to observe this could result in burns.
- Mechanical holding is not possible with the inverter brake function.

  Failure to observe this could result in injury.
- The digital input terminals are equipped with a function used to start and stop operation or change the speed command with the "FWD" operation command or "BX" free-run command and so on. Depending on the digital input terminal status, operation may start suddenly, or the speed may change significantly simply by changing the function code settings. Make changes to function code settings after sufficiently ensuring safety.
- With digital input, functions ("SS1, SS2, SS4, SS8", "Hz2/Hz1", "Hz/PID", "IVS", "LE", etc.) used to change the operation procedure for operation commands or command procedure for speed commands can be assigned. Depending on the conditions, changes to these signals may result in operation being started suddenly or the speed changing suddenly.
- Ensure safety before modifying customizable logic related function code settings (U codes and related function codes) or turning ON the "Cancel customizable logic" terminal command CLC. Depending upon the settings, such modification or cancellation of the customizable logic may change the operation sequence to cause a sudden motor start or an unexpected motor operation. Carry out a sufficient safety check beforehand.

  Failure to observe this could result in an accident or injury.

Speed control mode

⚠CAUTION

- If the control constant for the automatic speed regulator (ASR) used with speed control is not at an appropriate value, even if the operation command is turned OFF, deceleration control may not be performed, and stop conditions may not be met due to such reasons as hunting caused by a high gain setting. As a result, operation may continue.
- Hunting due to a high response may occur in the low-speed area when decelerating, the speed detection value may deviate from the zero speed area before the continuous zero speed control time (F39) has elapsed, the mode may change to low-speed mode again without stop conditions being met, and operation may continue.
- If the actual speed deviates from the speed command after adjusting the ASR control constant to an appropriate value and applying the speed mismatch alarm function, an alarm is tripped, allowing the motor to be stopped safely. Furthermore, taking measures such as changing the ASR control constant setting based on the speed, or judging stop speed detection with a speed command value allows the inverter to successfully control the motor.

  Failure to observe this could result in an accident or injury.

Torque control mode

⚠CAUTION

- When performing torque control, in cases such as when the motor is being rotated from the load side with torque greater than that specified with the torque command, there are times when torque conditions are not met, and operation continues even when the operation command is turned OFF.
- If wishing to cut the inverter output at such times, take measures such as changing to speed control and bringing the motor to a decelerated stop, or issuing a coast to stop command.

  Failure to observe this could result in an accident or injury.

Maintenance and inspection, part replacement

⚠WARNING⚠
• Carry out inspection after waiting 5 minutes or longer for units of FRN0115G2S-2G/FRN0060G2□-4G or lower, or 10 minutes or longer for units of FRN0146G2S-2G/FRN0085G2□-4G or higher after turning OFF the power. Furthermore, ensure that the LED monitor and charge lamp are OFF, and use a device such as a tester to ensure that the DC intermediate circuit voltage across main circuit terminals [P(+)] and [N(-)] has dropped to a safe level (+25 VDC or less). **Failure to observe this could result in electric shock.** • Be sure to perform the daily inspection and periodic inspection described in the instruction manual. Lengthy use of the product without inspection could result in inverter failure and damage, or accident and fire. • A periodic inspection cycle of 1 to 2 years is recommended, however, the cycle may be shortened depending on the usage conditions. • It is recommended that parts for periodic replacement be replaced after the standard number of years indicated in the instruction manual. Lengthy use of the product without replacing parts could result in inverter failure and damage, or accident and fire. • Contact outputs [30A/B/C] and [Y5A/C] use relays, and may remain ON or OFF, or in an indefinite state when the life is reached. In the interests of safety, equip the product with an external protection function. **Failure to observe this could result in fire or an accident.** • Maintenance and inspection, and part replacement should only be carried out by the authorized personnel. • Remove all metal objects (watches, rings, etc.) before beginning work. • Be sure to use insulated tools. • Never modify the product. **Failure to observe this could result in electric shock or injury.**

Disposal

⚠CAUTION
• If disposing of the FRENIC-MEGA, handle as industrial waste. **Failure to observe this could result in injury.**

General precautions

⚠CAUTION
The drawings in this User's Manual are used to provide detailed descriptions, and therefore some may be drawn with covers or safety shields removed. When running the product, do so only after returning covers or shields to their prescribed original locations, and then run as described in the User's Manual.

Icons

The following icons are used in this instruction manual.

Note — Incorrect handling due to negligence of the description accompanying this icon may undermine the true performance of the FRENIC-MEGA, and incorrect operation or settings may result in an accident.

Tip — Indicates reference items helpful for operation and data entry for the inverter.

Indicates references.

Chapter 1
BEFORE USE

This chapter explains the items to be checked before the use of the inverter.

Contents

1.1 Acceptance Inspection (Nameplate and Inverter Type) ····· 1-1
1.2 Product External Appearance ····· 1-3
1.3 Precautions for Using Inverters ····· 1-5
1.3.1 Usage environment ····· 1-5
1.3.2 Storage environment ····· 1-8
[1] Temporary storage ····· 1-8
[2] Long-term storage ····· 1-8
1.3.3 Precautions for connection of peripheral equipment ····· 1-9
[1] Phase-advancing capacitors for power factor correction ····· 1-9
[2] Power supply lines (application of DC/AC reactors) ····· 1-9
[3] DC reactor (DCR) for correcting the inverter input power factor (for suppressing harmonics) ····· 1-9
[4] PWM converter for correcting the inverter input power factor ····· 1-10
[5] Molded case circuit breakers (MCCB)/earth leakage circuit breakers (ELCB) ····· 1-10
[6] Magnetic contactor (MC) in the inverter input (primary) circuit ····· 1-10
[7] Magnetic contactor (MC) in the inverter output (secondary) circuit ····· 1-10
[8] Surge absorber/surge killer ····· 1-10
1.3.4 Noise reduction ····· 1-11
1.3.5 Leakage current ····· 1-11

1.1 Acceptance Inspection (Nameplate and Inverter Type)

Unpack the package and check the following:

(1) The package contains both the inverter unit and instruction manual (Simplified Edition), and the product has suffered no damage (breakage, dents, parts that have fallen off) during transport.

(2) The rating plate is affixed to inverter at the location shown in Fig. 1.2-1.) Ensure that the product is the same as the one ordered.

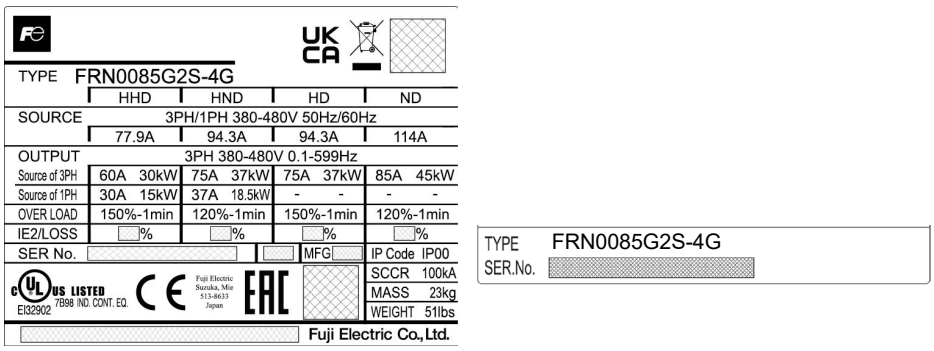

(a) Main Nameplate (b) Sub Nameplate

Fig. 1.1-1 Nameplates

TYPE: Inverter type

FRN 0003 G 2 S - 2 G

Code	Series name
FRN	FRENIC series

3-phase 200 V series

Code	Applicable motor rating *102			
	HHD kW (HP)	HND kW (HP)	HD kW (HP)	ND kW (HP)
0003	0.4 (1/2)	-	-	-
0005	0.75 (1)	-	-	-
≀	≀	-	-	-
0018	3.7 (5)	-	-	-
0032	5.5 (7.5)	7.5 (10)	-	-
0059	11 (15)	15 (20)	-	-
≀	≀	≀	-	-
0346	75 (100)	90 (125)	-	-
0432	90 (125)	110 (150)	-	-

3-phase 400 V series

Code	Applicable motor rating *102			
	HHD kW (HP)	HND kW (HP)	HD kW (HP)	ND kW (HP)
0002	0.4 (1/2)	-	-	-
0003	0.75 (1)	-	-	-
≀	≀	-	-	-
0009	3.7 (5)	-	-	-
0018	5.5 (7.5)	7.5 (10)	-	-
≀	≀	≀	-	-
0060	22 (30)	30 (40)	-	-
0085	30 (40)	37 (50)	37 (50)	45 (60)
≀	≀	≀	≀	≀
1385	500 (800)	630 (900)	560 (900)	710 (1200)
1480	630 (900)	710 (1200)	710 (1200)	800 (1300)

Code	Destination/Manual
G	Global/English

Code	Input power source
2	3-phase 200V
4	3-phase 400V

Code	Enclosure
S	Standard (basic type)(IP20/IP00)
E	EMC filter built-in type

Code	Order of development
2	2

Code	Applicable range
G	High performance, multifunctional type

Fig. 1.1-2 Inverter type

Note The inverter types indicated in all tables in this manual are expressed in the form “FRN****G2S-2G, FRN****G2□-4G”.

*102 HD and ND specification inverters are supported with ROM0600 or later.

There are four *102 specifications of inverter, HHD, HND, HD and ND *102, and the specification is changed based on the load applied to the inverter.

The respective specification is indicated on the nameplate.

For details on the HHD, HND, HD and ND *102 specifications, refer to Chapter 4 “4.5 Switching the Applicable Motor Rating (HHD/HND/HD/ND Specifications)” and Chapter 10 “10.4 Selecting the Inverter Rating Specification (HHD/HND/HD/ND)” in this manual.

Furthermore, the rated current differs for the HHD/HND/HD/ND *102 specifications, and the diameter of the wiring and the applicable instruments and devices will therefore differ.

Refer to Chapter 2 “2.2 Wiring” in this manual for details on the applicable wiring.

Refer to Chapter 11 “11.3 Molded Case Circuit Breakers (MCCB), Earth Leakage Circuit Breakers (ELCB) and Magnetic Contactors (MC)” in this manual for details on molded case circuit breakers, earth leakage circuit breakers, and magnetic contactors. Refer to Chapter 11 in this manual for details on other applicable instruments and devices.

HHD:	Specification for heavy duty applications, overload current rating: 1 min at 150% of rated output current, 3 s at 200%
HND:	Specification for normal applications, overload current rating: 1 min at 120% of rated output current
HD: *102	Specification for heavy duty applications, overload current rating: 1 min at 150% of rated output current
ND: *102	Specification for normal applications, overload current rating: 1 min at 120% of rated output current
SOURCE:	Number of input phases (three-phase: 3PH), input voltage, input frequency, input current
OUTPUT:	Number of output phases, rated output voltage, output frequency range, rated output current, and overload capacity
MOTOR:	Applicable motor
IE2/LOSS:	ErP (Energy related products) directive indication (grade/loss (%)) Loss data that occurs under all operating conditions can be referenced from a QR code.
MFG	ErP (Energy related products) directive indication (year of manufacture (western calendar))
IP CODE	Protection level
SCCR:	Short-circuit capacity
MASS:	Mass of the inverter in kilograms
SER. No.:	Product number 3 1 A 1 2 3 A 0 5 7 9 AA AA: Product version Production year and week 6 0 1 01: Production week: The 1st week of January is indicated as '01'. This indicates the week number that is numbered from 1st week of January. 6: Production year: Last digit of year

If you suspect the product is not working properly or if you have any questions about your product, contact your Fuji Electric representative.

*102 HD and ND specification inverters are supported with ROM0600 or later.

1.2 Product External Appearance

(1) Overall external appearance

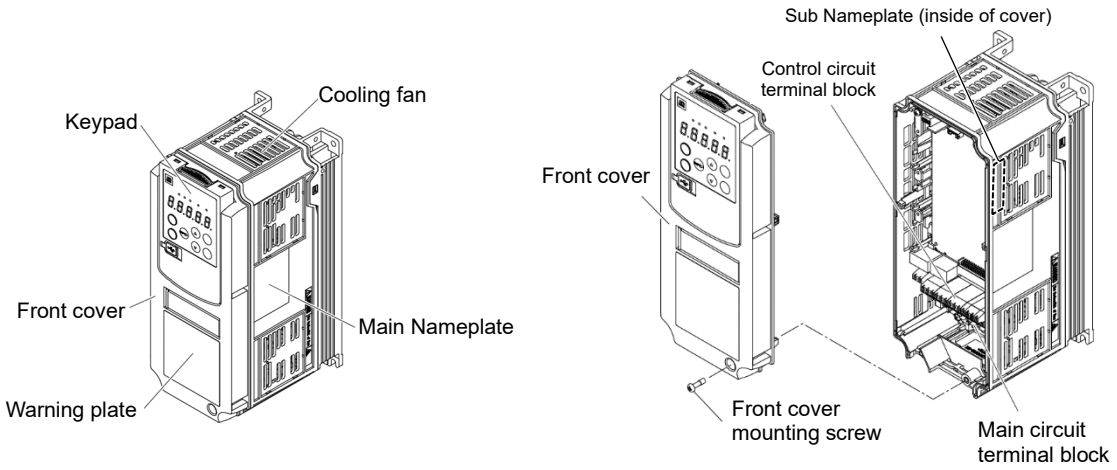

(a) FRN0005G2S-2G

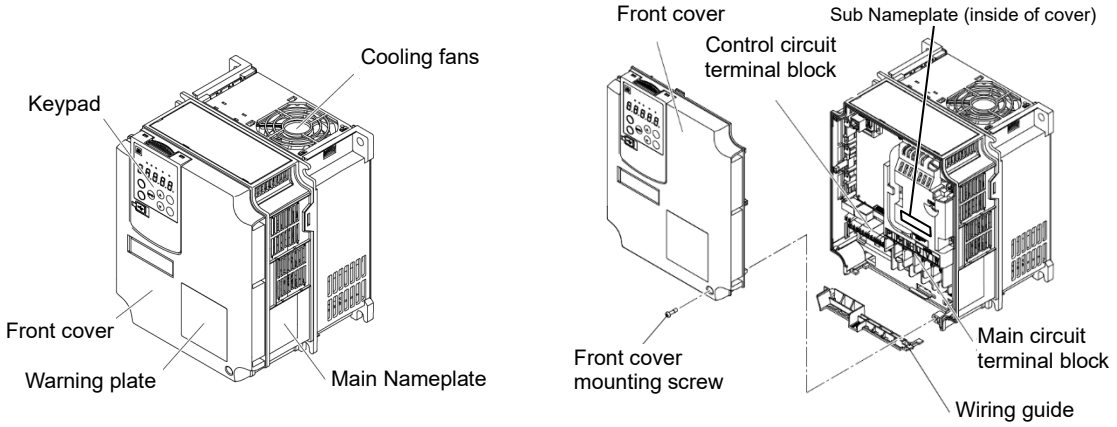

(b) FRN0059G2S-2G

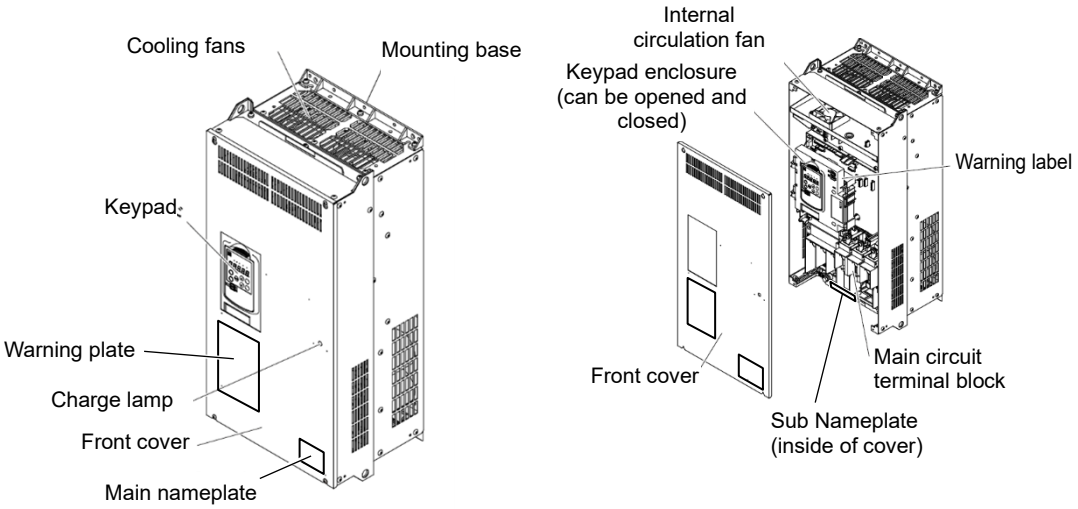

(c) FRN0217G2S-4G

Fig. 1.2-1 Overall external appearance

(2) Warning plates and label

FRENIC-MEGA

⚠ WARNING ⚠ RISK OF INJURY OR ELECTRIC SHOCK

- Refer to the instruction manual before installation and operation.
- Do not remove any cover while applying power and at least 5 min. after disconnecting power.
- More than one live circuit. See instruction manual.
- Securely ground (earth) the equipment.
- High touch current.

⚠ AVERTISSEMENT RISQUE DE BLESSURE OU DE CHOC ÉLECTRIQUE

- Ne retirez pas le couvercle lorsque vous mettez sous tension.
- Ce couvercle peut être retiré au moins 5 minutes après la mise hors tension et quand le témoin «ACTIF» s'éteint.
- Plus d'un circuit électrique actif. Reportez-vous an manuel d'instruction.

⚠ 警告 けが、感電のおそれあり

- 据え付け運転時の前に、必ず取扱説明書を読んでその指示に従うこと。
- 通電中及び電源しゃ断後 5 分以内は 表面カバーを開けないこと。
- 確実に接地をおこなうこと。

Only type B of RCD is allowed. See manual for details.

(a) FRN0003 to 0115G2S-2G
FRN0002 to 0060G2□-4G

FRENIC-MEGA

⚠ WARNING ⚠

■ RISK OF INJURY OR ELECTRIC SHOCK

- Refer to the instruction manual before installation and operation.
- Do not remove this cover while applying power.
- This cover can be removed after at least 10 min of power off and after the "CHARGE" lamp turns off.
- More than one live circuit. See instruction manual.
- Do not insert fingers or anything else into the inverter.
- Securely ground (earth) the equipment.
- High touch current.

⚠ AVERTISSEMENT

■ RISQUE DE BLESSURE OU DE CHOC ÉLECTRIQUE

- Ne retirez pas le couvercle lorsque vous mettez sous tension.
- Ce couvercle peut être retiré au moins 10 minutes après la mise hors tension et quand le témoin <<ACTIF>> s'éteint.
- Plus d'un circuit électrique actif. Reportez-vous an manuel d'instruction.

⚠ 警告

■ 有可能引起受伤、触电

- 安装运行之前请务必阅读操作说明书并遵照其指示
- 通电中不要打开表面盖板
- 断电 10 分钟以上，充电指示灯熄灭后才可打开表面盖板
- 打开表盖时，要确认已经切断各路的辅助电源（请参考说明书）
- 即使在安装了表面盖板时，也不要从缝隙间插入手指或其他异物
- 请正确接地

⚠ 警告

■ けが、感電のおそれあり

- 据え付け運転時の前に、必ず取扱説明書を読んでその指示に従うこと。
- 通電中は、表面カバーを開けないこと。
- 表面カバーを開ける場合は、電源しゃ断後10分以上経過後チャージランプが消灯したのを確認してから行うこと。
- 表面カバーを開ける場合は、各補助電源もしゃ断していることを確認してから行うこと（取扱説明書を参照のこと）。
- 表面カバー取付状態であっても、開口部より装置内部に指・異物等挿入しないこと。
- 確実に接地をおこなうこと。

Only type B of RCD is allowed. See manual for details.

(b) FRN0146 to 0432G2S-2G
FRN0085 to 0148G2□-4G

⚠ WARNING
RISK OF ELECTRIC SHOCK
⚠ 警告
有可能引起触电
⚠ 警告
感電のおそれあり

⚠ WARNING | Hot Surface-Risk of Burn | 高温注意

Warning label

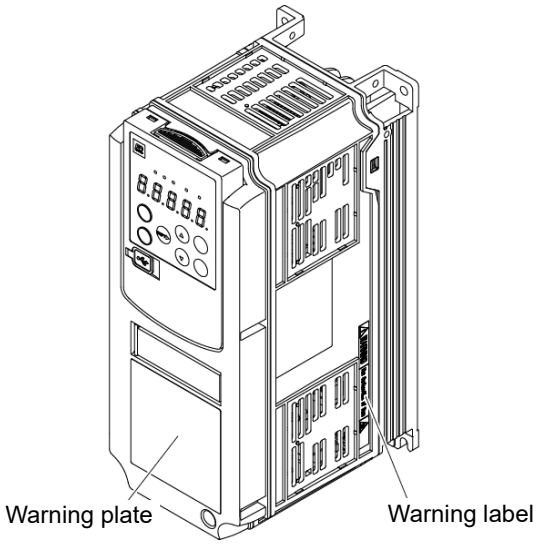

Fig. 1.2-2 Warning plates and label

1.3 Precautions for Using Inverters

This section provides precautions in introducing inverters, e.g. precautions for installation environment, power supply lines, wiring, and connection to peripheral equipment. Be sure to observe those precautions.

1.3.1 Usage environment

Install FRENIC-MEGA in an environment that satisfies the operating environment requirements listed in Table 1.3-1.

Table 1.3-1 Operating environment

<table>
<tr><th>Item</th><th colspan="5">Specifications</th></tr>
<tr><td>Site location</td><td colspan="5">Indoors　Environmental conditions: IEC60721-3-3:3C2</td></tr>
<tr><td>Ambient temperature</td><td colspan="5">HHD/HND
-10 to +55 °C (14 to 131ºF) (Current derating is necessary in the +50 to +55 ºC (122 to 131ºF) range.) (Note 3)
When installed closely side-by-side (FRN0003 to 0115G2S-2G / FRN0002 to 0060G2□-4G): -10 to +40 ºC (14 to 104°F)
HD/ND *102
-10 to +55 °C (14 to 131ºF) (Current derating is necessary in the +40 to +55 ºC (104 to 131ºF) range.) (Note 4)</td></tr>
<tr><td>Relative humidity</td><td colspan="5">5 to 95% RH (there should be no condensation)</td></tr>
<tr><td>Atmosphere</td><td colspan="5">The inverter must not be exposed to dust, direct sunlight, corrosive gases, flammable gases, oil mist, vapor or water droplets.
(Pollution degree 2 (IEC60664-1)) (Note 1)
The atmosphere can contain a small amount of salt (0.01 mg/cm^2 or less per year).
The inverter must not be subjected to sudden changes in temperature that will cause condensation to form.</td></tr>
<tr><td>Altitude</td><td colspan="5">1,000 m (3,300 ft) max. (Note 2)</td></tr>
<tr><td>Atmospheric pressure</td><td colspan="5">86 to 106 kPa</td></tr>
<tr><td rowspan="4">Vibration</td><td>Type of inverter</td><td>2 to less than 9 Hz</td><td>9 to less than 20 Hz</td><td>20 to less than 55 Hz</td><td>55 to less than 200 Hz</td></tr>
<tr><td>FRN0003 to 0115G2S-2G, FRN0002 to 0060G2□-4G</td><td rowspan="3">3 mm (max. amplitude)</td><td rowspan="2">9.8 m/s^2</td><td>5.9 m/s^2</td><td rowspan="3">1 m/s^2</td></tr>
<tr><td>FRN0146 to 0288G2S-2G, FRN0085 to 0217G2□-4G</td><td rowspan="2">2 m/s^2</td></tr>
<tr><td>FRN0346, 0432G2S-2G, FRN0261 to 1480G2□-4G</td><td>2 m/s^2</td></tr>
</table>

(Note 1) Do not install the inverter in an environment where it may be exposed to lint, cotton waste or moist dust or dirt which will clog the heat sink of the inverter.
If the inverter is to be used in such an environment, install it in cabinet to prevent lint, etc. getting in.

(Note 2) If you use the inverter in an altitude above 1,000 m (3,300 ft), you should apply an output current derating factor as listed in Table 1.3-2 below.

*102 HD and ND specification inverters are supported with ROM0600 or later.

Table 1.3-2 Output current derating factor relative to altitude

Altitude	Output current derating factor
1,000 m (3,300 ft) or less	1.00
1,000 to 1500 m (3,300 to 4,900 ft)	0.97
1,500 to 2,000 m (4,900 to 6,500 ft)	0.95
2,000 to 2,500 m (6,500 to 8,200 ft)	0.91
2,500 to 3,000 m (8,200 to 9,800 ft)	0.88

(Note 3) If the inverter is used in an environment which exceeds 50 °C, output current derating will be necessary.

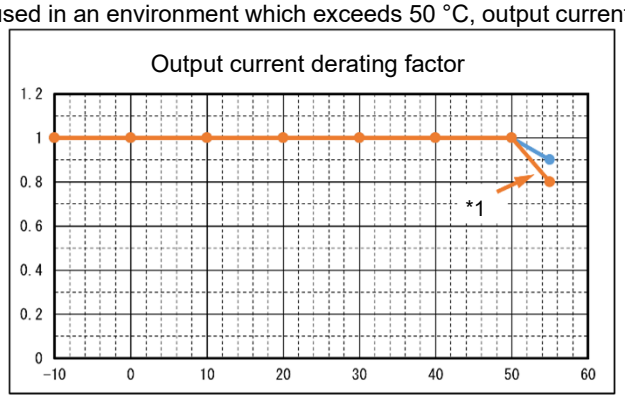

*1: This applies to FRN0008G2S-2G, FRN0023G2□-4G, and FRN0045G2□-4G

(Note 4) Constraint conditions such as temperature derating apply if using the product in environments with temperature between +40 to +55 ºC (104 to 131 ºF). Please submit an inquiry to the distributor for details.

Fuji Electric strongly recommends installing inverters in a panel for safety reasons, in particular, when installing the ones whose enclosure rating is IP00.

When installing the inverter in a place out of the specified environmental requirements, it is necessary to derate the inverter or consider the panel engineering design suitable for the special environment or the panel installation location. For details, refer to the Fuji Electric technical information “Engineering Design of Panels” or consult your Fuji Electric representative.

The special environments listed below require using the specially designed panel or considering the panel installation location.

Environments	Possible problems	Sample measures	Applications
Highly concentrated sulfidizing gas or other corrosive gases	Corrosive gases cause parts inside the inverter to corrode, resulting in an inverter malfunction.	Any of the following measures may be necessary. - Mount the inverter in a sealed panel with IP6X or air-purge mechanism. - Place the panel in a room free from influence of the gases.	Paper manufacturing, sewage treatment, sludge treatment, tire manufacturing, plaster manufacturing, metal processing, certain applications in the textile industry
A lot of conductive dust or foreign material (e.g., metal powders or shavings, carbon fibers, or carbon dust)	Entry of conductive dust into the inverter causes a short circuit.	Any of the following measures may be necessary. - Mount the inverter in a sealed panel. - Place the panel in a room free from influence of the conductive dust.	Wiredrawing machines, metal processing in general, extruders, printing machines, garbage incinerators, industrial waste disposal, etc.
A lot of fibrous or paper dust	Fibrous or paper dust accumulated on the heat sink lowers the cooling effect. Entry of dust into the inverter causes the electronic circuitry to malfunction.	Any of the following dust measures may be necessary. - Mount the inverter in a sealed panel that shuts out dust. - Ensure a maintenance space for periodical cleaning of the heat sink in panel engineering design. - Employ external cooling when mounting the inverter in a panel for easy maintenance and perform periodical maintenance.	Textile manufacturing and paper manufacturing
High humidity or dew condensation	In an environment where a humidifier is used or where the air conditioner is not equipped with a dehumidifier, high humidity or dew condensation results, which causes a short-circuiting or malfunction of electronic circuitry inside the inverter.	· Put a heating module such as a space heater in the panel.	Outdoor installation, film manufacturing lines, pumps, food processing, etc.
Vibration or shock exceeding the specified level	If a large vibration or shock exceeding the specified level is applied to the inverter, for example, due to a carrier running on seam joints of rails or blasting at a construction site, the inverter structure gets damaged.	· Insert shock-absorbing material between the mounting base of the inverter and the panel for safe mounting.	Installation of an inverter panel on a carrier or self-propelled machine. Ventilating fan at a construction site or a press machine.
Fumigation for export packaging	Halogen compounds such as methyl bromide used in fumigation corrodes some parts inside the inverter.	- When exporting an inverter built in a panel or equipment, pack them in a previously fumigated wooden crate. - When packing an inverter alone for export, use a laminated veneer lumber (LVL).	Exporting overseas

1.3.2 Storage environment

The storage environment in which the inverter should be stored after purchase differs from the usage environment. Store the FRENIC-MEGA in an environment that satisfies the requirements listed below.

[1] Temporary storage

Table 1.3-3 Storage and transport environments

Item	Specifications	
Storage temperature	During transport: -25 to +70 °C (-13 to +158 °F)	Places not subjected to abrupt temperature changes or condensation or freezing
	During storage: -25 to +65 °C (-13 to +153 °F)	
Relative humidity	5 to 95% RH *1	
Atmosphere	The inverter must not be exposed to dust, direct sunlight, corrosive or flammable gases, oil mist, vapor, water drops or vibration. The atmosphere must contain only a low level of salt. (0.01 mg/cm^2 or less per year)	
Atmospheric pressure	During storage: 86 to 106 kPa	
	During transport: 70 to 106 kPa	

*1 Even if the humidity is within the specified requirements, avoid such places where the inverter will be subjected to sudden changes in temperature that will cause condensation or freezing.

Precautions for temporary storage

(1) Do not leave the inverter directly on the floor.

(2) If the environment does not satisfy the specified requirements listed in Table 1.3-3, wrap the inverter in an airtight vinyl sheet or the like for storage.

(3) If the inverter is to be stored in a high-humidity environment, put a drying agent (such as silica gel) in the airtight package.

[2] Long-term storage

The long-term storage method of the inverter varies largely according to the environment of the storage site. General storage methods are described below.

(1) The storage site must satisfy the requirements specified for temporary storage.
However, for storage exceeding three months, the surrounding temperature range should be within the range from -10 to +35 °C (14 to 95 °F). This is to prevent electrolytic capacitors in the inverter from deterioration.

(2) The package must be airtight to protect the inverter from moisture. Add a drying agent (such as silica gel) inside the package to maintain the relative humidity inside the package within 70%.

(3) If the inverter has been installed to the equipment or panel at construction sites where it may be subjected to humidity, dust or dirt, then temporarily remove the inverter and store it in the environment specified in Table 1.3-3.

Precautions for storage over 1 year

If the inverter has not been powered on for a long time, the property of the electrolytic capacitors may deteriorate. Power the inverters on once a year and keep the inverters powering on for 30 to 60 minutes. Do not connect the inverters to the load circuit (secondary side) or run the inverter.

1.3.3 Precautions for connection of peripheral equipment

[1] Phase-advancing capacitors for power factor correction

Do not mount a phase-advancing capacitor for power factor correction in the inverter's input (primary) or output (secondary) circuit. Mounting it in the input (primary) circuit takes no effect.

To correct the inverter power factor, use a DC reactor (DCR) (option). Mounting it in the output (secondary) circuit causes an overcurrent trip, disabling operation.

An overvoltage trip that occurs when the inverter is stopped or running with a light load is assumed to be due to surge current generated by open/close of phase-advancing capacitors in the power system. The use of a DC reactor (DCR) or AC reactor (ACR) (options) is recommended as a measure to be taken at the inverter side.

Inverter input current to an inverter contains harmonic components that may affect other motors and phase-advancing capacitors on the same power supply line. If the harmonic components cause any problems, connect a DCR/ACR to the inverter.

In some cases, it is necessary to insert a reactor in series with the phase-advancing capacitors.

[2] Power supply lines (application of DC/AC reactors)

Use a DC reactor (DCR) when the capacity of the power supply transformer is 500 kVA or more and is 10 times or more the inverter rated capacity or when there are thyristor-driven loads. If no DCR is used, the percentage-reactance of the power supply decreases, and harmonic components and their peak levels increase. These factors may break rectifiers or capacitors in the converter section of the inverter, or decrease the capacitance of the capacitors.

If the input voltage interphase unbalance ratio is between 2% and 3%, use an AC reactor.

Interphase unbalance ratio [%]
= (Max. voltage [V] - min. voltage [V]) / Three-phase average voltage [V] × 67 (see IEC/EN61800-3)

[3] DC reactor (DCR) for correcting the inverter input power factor (for suppressing harmonics)

To correct the inverter input power factor (to suppress harmonics), use a DCR. Using a DCR increases the reactance of inverter's power source so as to decrease harmonic components on the power source lines and correct the power factor of the inverter.

DC reactor type	Input power factor	Remarks
DCR2/4-**/**A/**B	Approx. 90% to 95%	The last letter identifies the capacitance.
DCR2/4-**C	Approx. 86% to 90%	Only selectable for 37 kW or higher models.

Note
- Select a DCR matching not the inverter capacity but the rated capacity of the applied motor.
  Applicable reactors differ depending upon the selected HHD, HND, HD or ND *102 specification, even on the same type of inverters.

*102 HD and ND specification inverters are supported with ROM0600 or later.

[4] PWM converter for correcting the inverter input power factor

Using a PWM converter (High power-factor, regenerative PWM converter, RHC series) corrects the inverter power factor up to nearly “1.”

When combining an inverter with a PWM converter, disable the main power down detection by setting the function code H72 (main power detection) to “0” (default). If the main power down detection is enabled (H72 = 1, factory default), the inverter interprets the main power as being shut down, ignoring an entry of a run command.

[5] Molded case circuit breakers (MCCB)/earth leakage circuit breakers (ELCB)

Install a recommended MCCB or ELCB (with overcurrent protection) in the primary circuit of the inverter to protect the wiring. Since using an MCCB ELCB with a lager capacity than recommended ones breaks the protective coordination of the power supply system, be sure to select recommended ones. Also select ones with short-circuit breaking capacity suitable for the power source impedance.

⚠WARNING

If no zero-phase current (earth leakage current) detective device such as a ground-fault relay is installed in the upstream power supply line in order to avoid the entire power supply system's shutdown undesirable to factory operation, install a residual-current-operated protective device (RCD)/earth leakage circuit breaker (ELCB) individually to inverters to break the individual inverter power supply lines only.

Failure to observe this could result in fire.

[6] Magnetic contactor (MC) in the inverter input (primary) circuit

Avoid frequent ON/OFF operation of the magnetic contactor (MC) in the input circuit; otherwise, the inverter failure may result. If frequent start/stop of the motor is required, use “FWD” / “REV” terminal signals or the RUN/STOP keys on the inverter keypad.

The frequency of the MC's ON/OFF should not be more than once per 30 minutes. To assure 10-year or longer service life of the inverter, it should not be more than once per hour.

Tip

- From the system's safety point of view, it is recommended to employ such a sequence that shuts down the magnetic contactor (MC) in the inverter input circuit with an alarm output signal “ALM” issued on inverter's programmable output terminals. This sequence minimizes the secondary damage even if the inverter breaks. When this sequence is employed, connecting the MC's primary power line to the inverter's control power auxiliary input makes it possible to monitor the inverter's alarm status on the keypad.
- The breakdown of a braking unit or misconnection of an external braking resistor may cause damage of the inverter's internal parts (e.g., charging resistor). To avoid such a breakdown linkage, introduce an MC and configure a sequence that shuts down the MC if a DC link voltage establishment signal is not issued within three seconds after the MC is switched on. For the braking transistor built-in type of inverters, assign a transistor error output signal “DBAL” on inverter's programmable output terminals to switch off the MC in the inverter input circuit.

[7] Magnetic contactor (MC) in the inverter output (secondary) circuit

If a magnetic contactor (MC) is inserted in the inverter's output (secondary) circuit for switching the motor to a commercial power or for any other purposes, it should be switched on and off when both the inverter and motor are completely stopped. This prevents the contact point from getting damaged due to a switching arc of the MC. The MC should not be equipped with any main circuit surge killer.

Applying a commercial power to the inverter's output (secondary) circuit breaks the inverter. To avoid this, employ an interlock to ensure that the magnetic contactor at the commercial power supply side does not turn ON at the same time as the magnetic contactor at the inverter output side.

[8] Surge absorber/surge killer

Do not install any surge absorber or surge killer in the inverter's output (secondary) lines.

1.3.4 Noise reduction

If noise generated from the inverter affects other devices, or that generated from peripheral equipment causes the inverter to malfunction, follow the basic measures outlined below.

(1) If noise generated from the inverter affects the other devices through power wires or grounding wires:
- Isolate the grounding terminals of the inverter from those of the other devices.
- Connect a noise filter to the inverter power wires.
- Isolate the power system of the other devices from that of the inverter with an insulated transformer.
- Decrease the inverter's carrier frequency (F26). See Note below.

(2) If induction or radiated noise generated from the inverter affects other devices:
- Isolate the main circuit wires from the control circuit wires and other devices wires.
- Put the main circuit wires through a metal conduit pipe, and connect the pipe to the ground near the inverter.
- Install the inverter into the metal panel and connect the whole panel to the ground.
- Connect a noise filter to the inverter power wires.
- Decrease the inverter's carrier frequency (F26). See Note below.

(3) When implementing measures against noise generated from peripheral equipment:
- For inverter's control signal wires, use twisted or shielded-twisted wires.

  When using shielded-twisted wires, connect the shield of the shielded wires to the common terminals of the control circuit.
- Connect a surge absorber in parallel with magnetic contactor's coils or other solenoids (if any).

Note: Running a permanent magnet synchronous motor (PMSM) at a low carrier frequency may heat the permanent magnet due to the output current harmonics, resulting in demagnetization. When decreasing the carrier frequency setting, be sure to check the allowable carrier frequency of the motor.

1.3.5 Leakage current

A high frequency current component generated by insulated gate bipolar transistors (IGBTs) switching on/off inside the inverter produces leakage current through stray capacitance of inverter input and output wires or a motor. If any of the problems listed below occurs, take an appropriate measure against them.

Defect phenomenon	Measure
An earth leakage circuit breaker* that is connected to the input (primary) side has tripped. * With overcurrent protection	1) Decrease the carrier frequency. See Note below. 2) Make the wires between the inverter and motor as short as possible. 3) Use an earth leakage circuit breaker with lower sensitivity than the one currently used. 4) Use an earth leakage circuit breaker that features measures against the high frequency current component (Fuji SG and EG series).
An external thermal relay was falsely activated.	1) Decrease the carrier frequency. See Note below. 2) Increase the current setting of the thermal relay. 3) Use the electronic thermal overload protection built in the inverter, instead of the external thermal relay.

Note: Running a permanent magnet synchronous motor (PMSM) at a low carrier frequency may heat the permanent magnet due to the output current harmonics, resulting in demagnetization. When decreasing the carrier frequency setting, be sure to check the allowable carrier frequency of the motor.

Chapter 2
INSTALLATION AND WIRING

This chapter describes the important points in installing and wiring inverters.

Contents

2.1 Installation ····· 2-1
2.2 Wiring ····· 2-4
2.2.1 Basic connection diagrams ····· 2-4
2.2.2 Removal and attachment of the front cover and wiring guide ····· 2-6
2.2.3 Wiring precautions ····· 2-7
2.2.4 Precautions for long wiring (between inverter and motor) ····· 2-9
2.2.5 Main circuit terminals ····· 2-11
[1] Screw specifications (main circuit terminals) ····· 2-11
[2] Terminal layout diagrams (main circuit terminals) ····· 2-12
[3] Recommended wire size (main circuit terminals) ····· 2-13
[4] Terminal function description (main circuit terminals) ····· 2-24
2.2.6 Control circuit terminals (common to all models) ····· 2-29
[1] Screw specifications and recommended wire size (control circuit terminals) ····· 2-29
[2] Terminal layout diagram (control circuit terminals) ····· 2-29
[3] Control circuit wiring precautions ····· 2-30
[4] Description of terminal functions (control circuit terminals) ····· 2-31
2.2.7 Switching switches ····· 2-42
2.3 Mounting and Removing the Keypad ····· 2-45

2.1 Installation

(1) Installation environment

Please install FRENIC-MEGA in locations which meet the requirements specified in Chapter 1 “1.3.1 Operating environment”.

(2) Installation surface

Please install the inverter on noncombustibles such as metal. Also, do not mount it upside down or horizontally.

⚠WARNING

Install on noncombustibles such as metal.
Failure to observe this could result in fire.

(3) Surrounding space

Secure the surrounding space shown in Fig. 2.1-1 and Table 2.1-1. If enclosing the product in a cabinet and so on, be sure to provide adequate ventilation to the cabinet, as the ambient temperature may rise. Do not contain it in small enclosures with low heat dissipation capacity.

■ Installation of multiple inverters

If installing two or more units inside the same equipment or cabinet, they must be installed side by side as a rule. If vertical installation is unavoidable, install partitions to prevent heat dissipation from inverters below affecting those above.

With FRN0003 to 0115G2S-2G / FRN0002 to 0060G2□-4G, only in the case of an ambient temperature of 40 °C (104°F) or below is it possible to install inverters and converters closely together horizontally.

Table 2.1-1 Surrounding space (mm (inch))

Type of Inverter		A	B	C
FRN**** G2S-2G	FRN**** G2□-4G			
0003 to 0008	0002 to 0004	50 (1.97)	100 (3.9)	0 (0)
0011 to 0115	0006 to 0060	10 (0.39)		
0146 to 0432	0085 to 0610	50 (1.97)		100 (3.9)
—	0739 to 1480		150 (5.9)	150 (5.9)

C: Space in front of inverter unit

Fig. 2.1-1 Installation direction

■ Installation with external cooling

The external cooling installation reduces the generated heat inside the panel by dissipating approximately 70% of the total heat generated (total heat loss) by mounting the cooling fins protruding outside the equipment or cabinet. The external cooling unit body for the FRN0146 to 0432G2S -2G / FRN0085 to 1480G2□-4G has a protective construction of IP55.

Installation with external cooling is possible for inverters FRN0032 to 0115G2S-2G / FRN0018 to 0060G2□-4G with the addition of an external cooling attachment (option), and for FRN0032 to 0115G2S-2G / FRN0018 to 0060G2□-4G by moving the mounting base.

(Refer to Chapter 11 “11.13 External Cooling Fan Attachments” for details on external cooling attachments.)

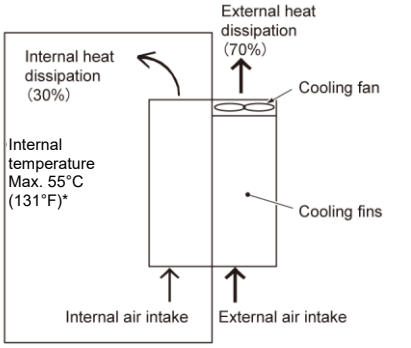

* Current derating is necessary in the +50 to +55°C (122 to 131°F) range.

Fig. 2.1-2 External cooling installation method

⚠CAUTION

Take measures to prevent foreign material such as lint, wastepaper, wood shavings, dust, or metal scraps getting into the inverter, or adhering to the cooling fan.

Failure to observe this could result in fire or an accident.

If installing FRN0146 to 0432G2S-2G / FRN0085 to 1480G2□-4G with external cooling, change the mounting position of the upper and lower mounting bases using the following procedure. (See Fig. 2. 1-3 below.)

The screw sizes and number of screws used will differ depending on the inverter type. Please check the following table.

Table 2.1-2 Screw sizes, screw quantity, and tightening torque

Inverter type	Mounting base securing screw	Case mounting screw	Tightening torque N·m (lb-in)
FRN0146, 0180G2S-2G FRN0085 to 0179G2□-4G	M6x20 (top 5, bottom 3)	M6x20 (2 for top only)	5.8 (51.3)
FRN0215, 0288G2S-2G FRN0217G2□-4G	M6x20 (3 each for top and bottom)	M6x12 (3 for top only)	5.8 (51.3)
FRN0346G2S-2G FRN0261, 0290G2□-4G	M5x12 (7 each for top and bottom)	M5x12 (7 for top only)	3.5 (31.0)
FRN0376, 0431G2□-4G	M5x16 (7 each for top and bottom)	M5x16 (7 for top only)	3.5 (31.0)
FRN0432G2S-2G FRN0547, 0610G2□-4G	M5x16 (8 each for top and bottom)	M5x16 (8 for top only)	3.5 (31.0)
FRN0739, 0840G2□-4G FRN1039, 1169G2□-4G	M5x16 (2 each for top and bottom) M6x20 (6 each for top and bottom)	M5x16 (2 each for top and bottom) M6x20 (6 each for top and bottom)	3.5 (31.0) 5.8 (51.3)
FRN1385, 1480G2□-4G	M8x20 (8 each for top and bottom)	M8x20 (8 each for top and bottom)	13.5 (119.5)

1) Remove all of the mounting base securing screws and case mounting screws from the top of the inverter unit.
2) Secure the mounting base to the screw holes for the case mounting screws with the mounting base securing screws. There will be screws remaining after changing the mounting base position.
3) Change the mounting base position at the bottom also using steps 1) and 2).
(Inverters type of FRN0003 to 0432G2S-2G / FRN0002 to 0610G2□-4G have no case mounting screws on the bottom.)

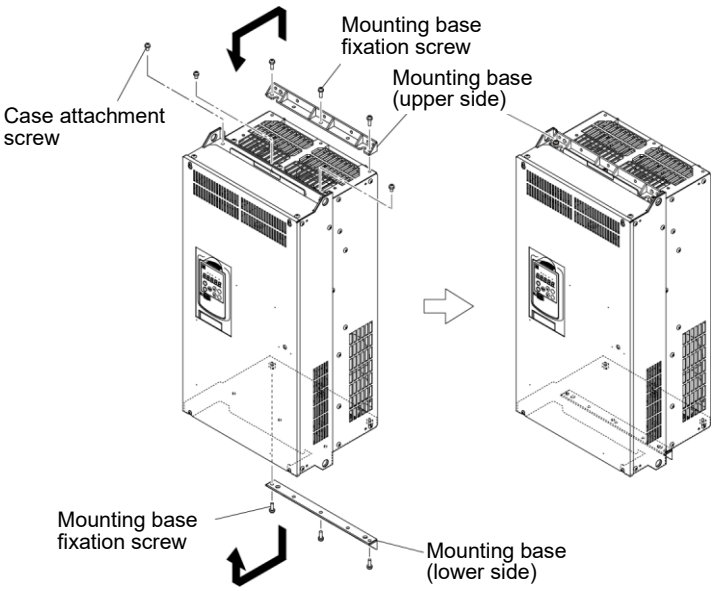

Fig. 2.1-3 Mounting base position change method

⚠CAUTION

Use the specified screws for changing the mounting base.

Failure to observe this could result in fire or an accident.

2.2 Wiring

2.2.1 Basic connection diagrams

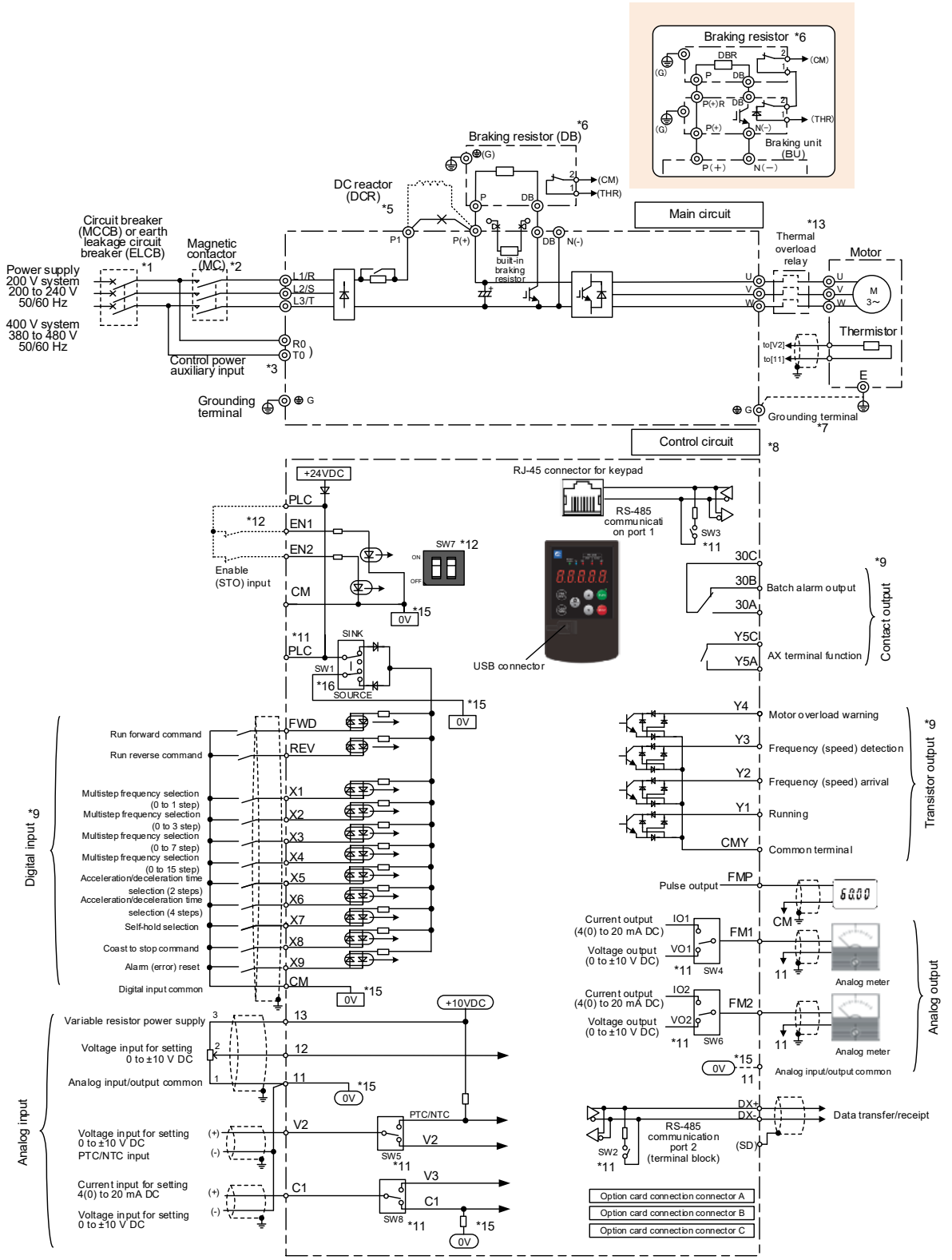

Fig. 2.2-1 Basic connection diagram

(*1) Install the molded case circuit breaker (MCCB) or earth leakage circuit breaker (ELCB) (with overcurrent protection function) recommended for each inverter on the inverter input side (primary side) to protect wiring. Do not use a circuit breaker that exceeds the recommended rated current.

(*2) An MCCB or ELCB is also used if isolating the inverter from the power supply, and therefore the magnetic contactor (MC) recommended for each inverter should be installed if required. Please note that if installing a coil such as an MC or solenoid near the inverter, connect a surge absorber in parallel.

(*3) If wishing to retain the integrated alarm signal issued if the protective function is triggered even when the inverter main power supply is cut off, or to constantly display the keypad, connect these terminals to the power supply. (on FRN0008 to 0432G2S-2G / FRN0004 to 1480G2□-4G)
The inverter can be run even without inputting the power supply to these terminals.
If connecting to a PWM converter, refer to “Fig. 2.2-11 Example of connection of [R0], [T0] terminals in combination with PWM converter” before connecting.

(*5) Remove the shorting bar between the inverter main circuit terminals [P1] and [P(+)] before connecting the DC reactor (DCR) (option). Be sure to connect if using a motor with output of 75 kW or higher. Use a DC reactor (DCR) when the capacity of the power supply transformer is 500 kVA or more and is 10 times or more the inverter rated capacity, or when there are “thyristor-driven” loads.

(*6) FRN0003 to 0288G2S-2G / FRN0002 to 0217G2□-4G are equipped with a built-in braking transistor, allowing direct connection of braking resistors between [P(+)] and [DB].
If connecting a braking resistor (DB) (option) to FRN0346, 0432G2S-2G / FRN0261 to 1480G2□-4G, a braking unit (BU) (option) is necessary. A built-in braking resistor is connected between terminals [P(+)] and [DB] on FRN0003 to 0046G2S-2G / FRN0002 to 0023G2□-4G.
If connecting a braking resistor (DB), be sure to disconnect the built-in braking resistor.

(*7) This terminal is used for grounding the motor. Connect if required.

(*8) Use twisted wire or shielded wire for control signal lines.
Shielded wires are generally grounded, however, if subject to significant induction noise from outside, it may be possible to suppress the effect of the noise by connecting wires to [CM]. Isolate control signal lines from the main circuit wiring as best as possible, and do not run inside the same duct (a distance of 10 cm or greater is recommended.) If lines intersect, ensure that they do so almost perpendicularly to the main circuit wiring.

(*9) Each of the functions described for terminals [FWD] and [REV], terminals [X1] to [X9] (digital input), terminals [Y1] to [Y4] (transistor output), terminal [Y5A/C], and terminal [30A/B/C] (contact output) indicate functions assigned by factory default.

(*11) These are the switches on control PCBs, and are used to specify settings for inverter operation. Refer to the User’s Manual, “2.2.7 Switching switches” for details.

(*12) Safety function terminals [EN1] and [EN2] are disabled with SW7 (2-pole switch) on the control PCB by factory default. If using this terminal function, be sure to change the respective SW7 switches to the OFF position and connect.

(*13) Install a thermal relay if necessary. Make the circuit breakers (MCCB) or the magnetic contactors (MC) trip by the thermal relay auxiliary contacts (manual recovery).

(*15) [0V] and (0V) are isolated and insulated.

(*16) The factory default setting for SW1 of FRN****G2E-4G is “SOURCE”.

Carry out wiring work in the following order (The descriptions assume that the inverter has already been installed).

2.2.2 Removal and attachment of the front cover and wiring guide

⚠CAUTION

If using the RS-485 communication cable for such purposes as remotely operating the keypad, always remove the RS-485 communication cable from the RJ-45 connector before removing the front cover.

Failure to observe this could result in fire or an accident.

(1) FRN0003 to 0115G2S-2G / FRN0002 to 0060G2□-4G

1) Loosen the screws of the front cover. Hold both sides of the front cover with the hands, slide the cover downward, and pull. Then remove it to the upward direction.
2) Push the wiring guide upward and pull. Let the wiring guide slide and remove it.
3) After routing the wires, attach the wiring guide and the front cover reversing the steps above.

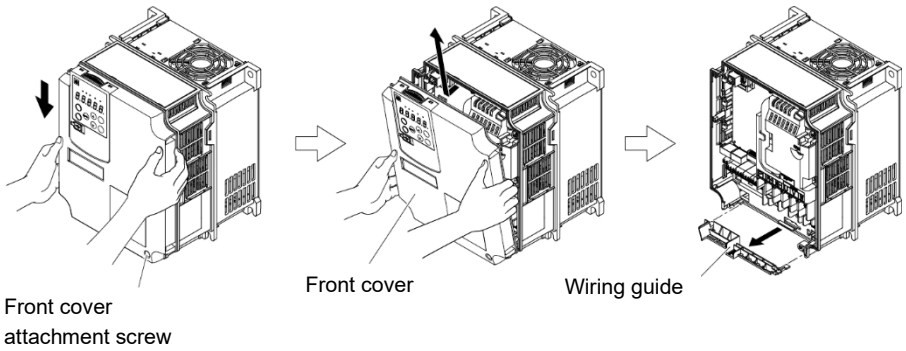

Fig. 2.2-2 Removal of front cover and wiring guide (for FRN0059G2S-2G)

(2) FRN0146 to 0432G2S-2G / FRN0085 to 1480G2□-4G

1) Loosen the screws of the front cover. Hold both sides of the front cover by hand, and slide the cover upward to remove.
2) After carrying out wiring work, align the top of the front cover with the hole on the cover, and reattach using the opposite procedure to that in Fig. 2.2-3.

Tip Open the keypad case to expose the control PCB.

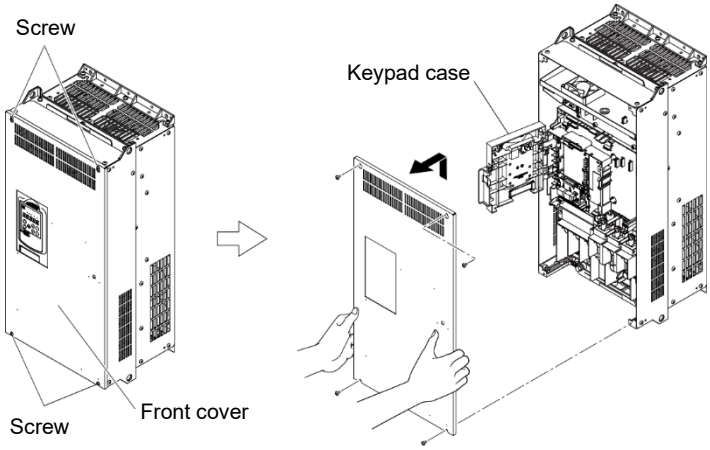

Tightening torque: 1.8 N·m (15.9 lb-in) (M4)
3.5 N·m (31.0 lb-in) (M5)

Fig. 2.2-3 Front cover removal (FRN0217G2□-4G)

2.2.3 Wiring precautions

Pay attention to the following items when carrying out wiring.

(1) Confirm that the supply voltage is within the input voltage range described on the rating plate.

(2) Always connect the power lines to the inverter main power input terminals [L1/R], [L2/S], and [L3/T] (three-phase). (The inverter will be damaged when power is applied if the power lines are connected to the wrong terminals.)

(3) Be sure to connect a ground wire in order to prevent accidents such as electric shock or fire, and to reduce noise.

(4) For the lines connecting to the main circuit terminals, use crimped terminals with insulating sleeves or use crimped terminals in conjunction with insulating sleeves for high connection reliability.

(5) Separate the routing of the lines connected to the main circuit input side terminals (primary side) and the output side terminals (secondary side) and the lines connected to the control circuit terminals.
The control circuit terminal lines should be routed as far as possible from the main circuit routing. Malfunction may occur due to noise.

(6) To prevent direct contact with the main circuit live sections (such as the main circuit terminal block), route the control circuit wiring inside the inverter as bundles using cable ties.

(7) After removing a main circuit terminal screw, always restore the terminal screw in position and tighten even if lines are not connected.

(8) The wiring guide is used to separately route the main circuit wiring and the control circuit wiring. The main circuit wiring and the control circuit wiring can be separated. Exercise caution for the order of wiring.

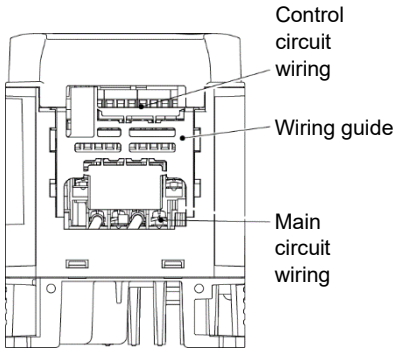

Fig. 2.2-4 FRN0005G2S-2G

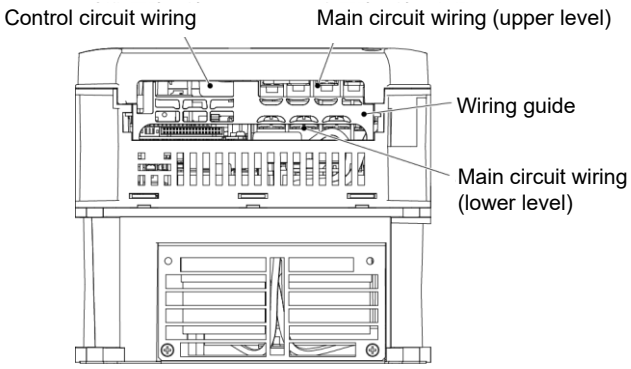

Fig. 2.2-5 FRN0059G2S-2G

■ **Handling the wiring guide**

When wiring the main circuit on FRN0059 to 0115G2S-2G / FRN0035 to 0060G2□-4G, the wiring space may become insufficient when routing the main circuit wires, depending on the wire material used. In these cases, the relevant cut-off sections (see figure below) can be removed using a pair of nippers to secure routing space. Be warned that removing the wiring guide to accommodate the enlarged main circuit wiring may result in non-conformance with IP20 requirements.

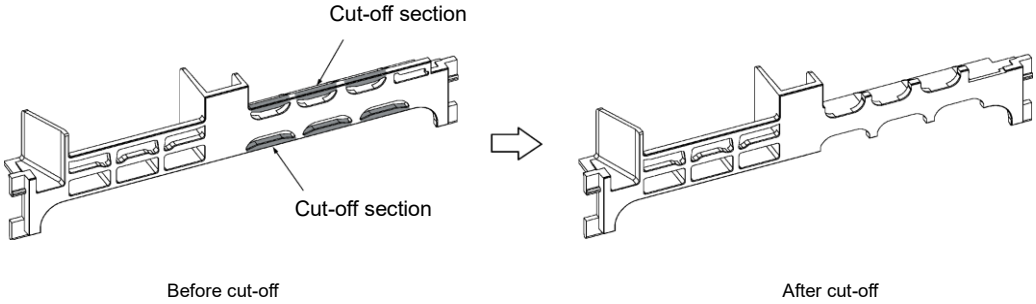

Fig. 2.2-6 Wiring guide (for FRN0075G2S-2G)

(9) Depending on the inverter capacity, straight routing of the main circuit wires from the main circuit terminal block may not be possible. In these cases, route the wires as shown in the figure below and securely attach the front cover.

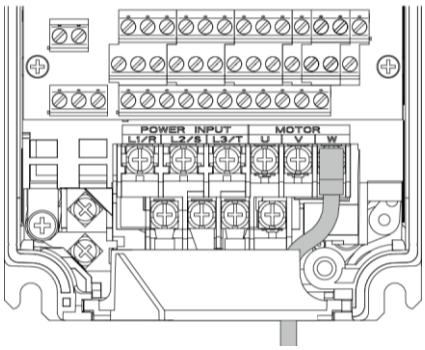

Fig. 2.2-7

(10) The [L2/S] input terminals on FRN1385, 1480G2□-4G is located in the vertical direction when facing the unit. When connecting wires to these terminals, do so using the bolts, washers, and nuts provided as shown below.

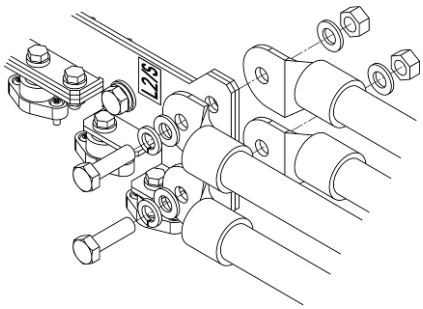

Fig. 2.2-8

2.2.4 Precautions for long wiring (between inverter and motor)

(1) When multiple motors are connected to one inverter, the wiring length is the total of all wire lengths.

(2) Precautions for high-frequency leakage current

Precautions shall be taken for high frequency leakage current when the wiring length from the inverter to the motor is long, in this case the high frequency current may flow through the stray capacitance between the wires with various phases. The effect may cause the inverter to become overheated, or trip due to overcurrent. Leakage current may increase and the accuracy of the displayed current may not be ensured. Depending on the conditions, excessive leakage current may damage the inverter. To avoid the above problems when directly connecting an inverter to a motor, keep the wiring length to 50 m (164 ft) or less for FRN0003 to 0018G2S-2G / FRN0002 to 0009G2□-4G, and to 100 m (328 ft) or less for FRN0032 to 0432G2S-2G / FRN0018 to 1480G2□-4G.

If using with longer wire lengths than those above, use with a carrier frequency of 5 kHz or less, and if using a 400V series inverter, use an output circuit filter (OFL-***-4A) (option).

When multiple motors are operated in parallel connection configuration (group operation), and especially when shielded cables are used for the connections, the ground to ground stray capacitance will be large. In this case, use with a carrier frequency of 5 kHz or less, and if using a 400V series inverter, use an output circuit filter (OFL-***-4A).

Without output circuit filter	With output circuit filter
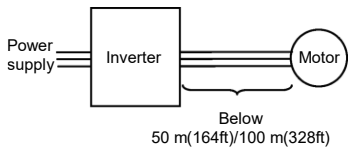	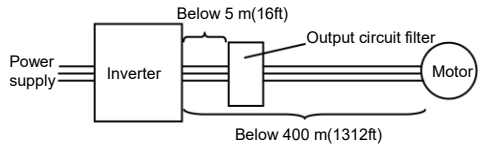

When the output circuit filter is used, the total wiring length should be below 400 m (1312ft) in case of using V/f control.
For motors with encoders, the wiring length between the inverter and motor should be below 100 m (328ft). The restriction comes from the encoder specifications. For distances beyond 100 m (328ft), insulation converters should be used. Please contact Fuji Electric when operating with wiring lengths beyond the upper limit.

(3) Precautions on the surge voltage when driving the inverter (especially for 400 V series motor)
When motors are driven by inverters using the PWM method, the surge voltage generated by the switching of the inverter elements is added to the output voltage and is applied onto the motor terminals. Especially when the motor wiring length is long, the surge voltage can cause insulation degradation in the motor. Please perform one of the countermeasures shown below.

- Use motor with insulation enhancement (Fuji's standard motors have insulation enhancements)
- Connect an output circuit filter (OFL-***-4A) to the inverter output side (secondary side).
- Reduce the wiring length from the inverter to the motor to less than 10 to 20 meters (33 to 66 ft).

(4) When an output circuit filter (OFL-***-4A) is inserted in the inverter, or when the wiring length is long, the voltage applied to the motor will decrease due to the voltage drop caused by the filter or wiring, and current vibration or insufficient torque may occur. Furthermore that when performing auto torque boost, or control such as voltage compensation for dynamic torque vector control or vector control with sensor/sensorless vector control, voltage for which the voltage drop has been compensated with auto-tuning is output. However, if running the inverter near to or higher than the base frequency, it is not possible to compensate for voltage drop.

Refer to "TEST RUN PROCEDURE" in Chapter 4 for details on the auto-tuning method.

⚠WARNING⚠

- Connect to the power supply via a molded case circuit breaker or earth leakage circuit breaker (with overcurrent protection function) for each inverter.
  Use the recommended molded case circuit breaker or earth leakage circuit breaker, and do not use circuit breakers that exceed the recommended rated current.
- Be sure to use the specified wire size.
- Tighten terminals with the prescribed tightening torque.
- If there are multiple inverter and motor combinations, do not use multi-core cables for the purpose of bundling and storing wiring for multiple combinations.
- Do not install a surge suppressor to the inverter output side (secondary side).

  Failure to observe this could result in fire.

- Ground the inverter in compliance with the national or local electric code.
- Be sure to ground the inverter ground terminal [⏚G] grounding wire.

  Failure to observe this could result in electric shock or fire.

- Wiring work should be carried out by qualified professionals.
- Carry out wiring work after ensuring that the power has been turned OFF.

  Failure to observe this could result in electric shock.

- Always carry out wiring after installing the unit.

  Failure to observe this could result in electric shock or injury.

- Ensure that the number of phases and rated voltage of the product input power supply matches that for the connected power supply.
- Do not connect the power lines to the inverter output terminals [U], [V], [W].

  Failure to observe this could result in fire or an accident.

2.2.5 Main circuit terminals

The specifications for the screws used in the main circuit wiring and the wire sizes are shown below. Exercise caution as the terminal position varies depending on inverter capacity. In the diagram in "[2] Terminal layout diagrams (main circuit terminals)", the two ground terminals [⏚G] are not differentiated for the input side (primary side) and the output side (secondary side).

Also, use crimped terminals with insulating sleeves compatible for main circuit or terminals with insulating tubes. The recommended wire sizes are shown depending on cabinet temperature and wire type.

[1] Screw specifications (main circuit terminals)

Table 2.2-1 Screw specifications

Inverter type		Ref.	Screw specification					
			Main circuit		Grounding		Control power auxiliary input [R0, T0]	
Three-phase 200 V	Three-phase 400 V		Screw size (driver size)	Tightening torque N·m (lb-in)	Screw size (driver size)	Tightening torque N·m (lb-in)	Screw size	Tightening torque N·m (lb-in)
FRN0003G2S-2G	FRN0002G2□-4G	Fig. A	M3.5	1.2 (10.6)	M3.5	1.2 (10.6)	-	-
FRN0005G2S-2G	FRN0003G2□-4G							
FRN0008G2S-2G	FRN0004G2□-4G	Fig. B	M4	1.8 (15.9)	M4	1.8 (15.9)	M3.5	1.2 (10.6)
FRN0011G2S-2G	FRN0006G2□-4G							
FRN0018G2S-2G	FRN0009G2□-4G							
FRN0032G2S-2G	FRN0018G2□-4G	Fig. C	M5	3.5 (31.0)	M5	3.5 (31.0)		
FRN0046G2S-2G	FRN0023G2□-4G							
FRN0059G2S-2G	FRN0035G2□-4G							
FRN0075G2S-2G	FRN0041G2□-4G	Fig. D	M6 (No.3)	5.8 (51.3)	M6 (No.3)	5.8 (51.3)		
FRN0088G2S-2G	FRN0045G2□-4G							
FRN0115G2S-2G	FRN0060G2□-4G							
FRN0146G2S-2G	FRN0085G2□-4G	Fig. E	M8	13.5 (119)	M8	13.5 (119)		
	FRN0105G2□-4G							
	FRN0139G2□-4G							
	FRN0179G2□-4G							
FRN0180G2S-2G	FRN00217G2□-4G	Fig. F	M10	27 (239)				
FRN0215G2S-2G								
FRN0288G2S-2G								
-	FRN0261G2□-4G	Fig. G						
	FRN0290G2□-4G							
FRN0346G2S-2G	-	Fig. M	M12	48 (425)	M10	27 (239)		
-	FRN0376G2□-4G	Fig. H						
	FRN0431G2□-4G							
FRN0432G2S-2G	FRN0547G2□-4G	Fig. I						
	FRN0610G2□-4G							
-	FRN0739G2□-4G	Fig. J						
	FRN0840G2□-4G							
	FRN1039G2□-4G	Fig. K						
	FRN1169G2□-4G							
	FRN1385G2□-4G	Fig. L						
	FRN1480G2□-4G							

[2] Terminal layout diagrams (main circuit terminals)

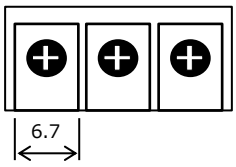

The dimensions for each terminal indicate the “dimensions between walls” as shown in the diagram on the left.

Figure A Charging lamp

Terminal block width: 6.6

Figure B Charging lamp

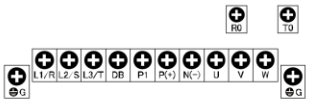

Terminal block width
- [R0], [T0]6.6
- Others: 9.5

Figure C Charging lamp

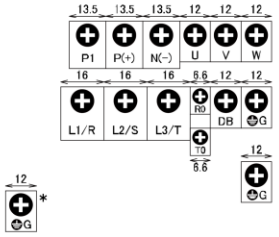

Figure D Charging lamp

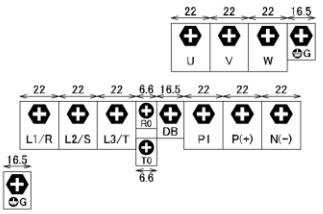

Figure E Charging lamp

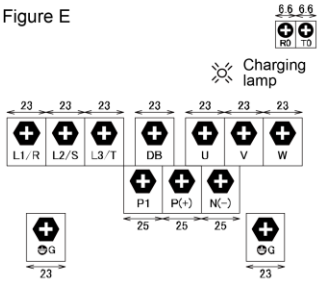

Figure F / Figure G Charging lamp
*Fig. F only

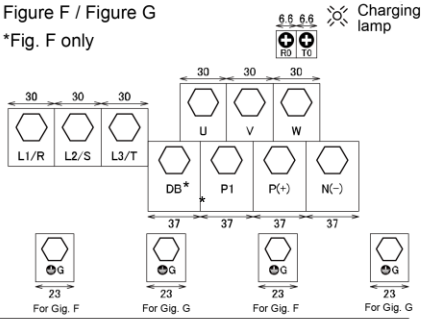

Figure H / Figure I Charging lamp

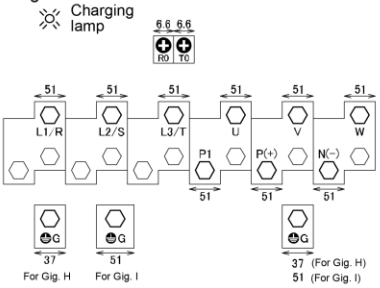

Figure J Charging lamp

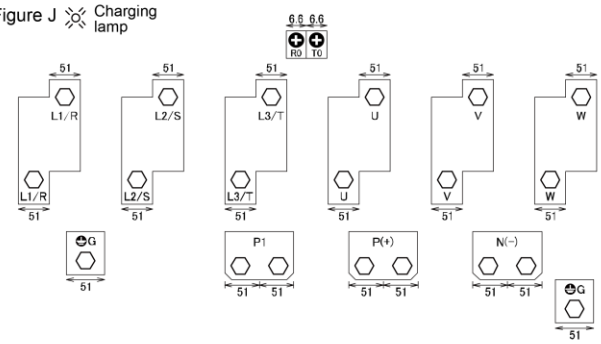

Figure K Charging lamp

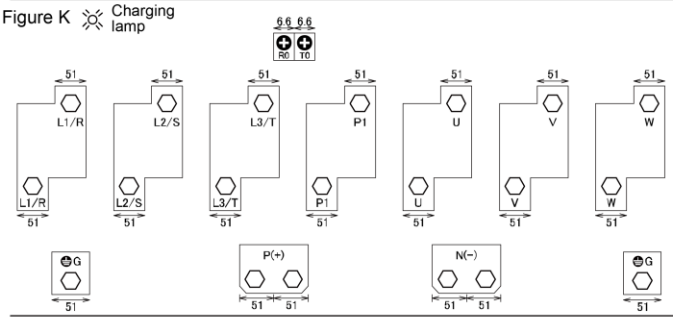

Figure M Charging lamp

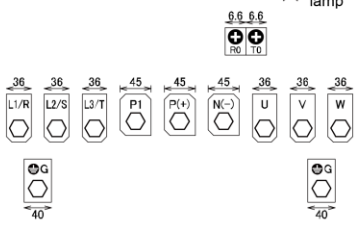

Figure L Charging lamp

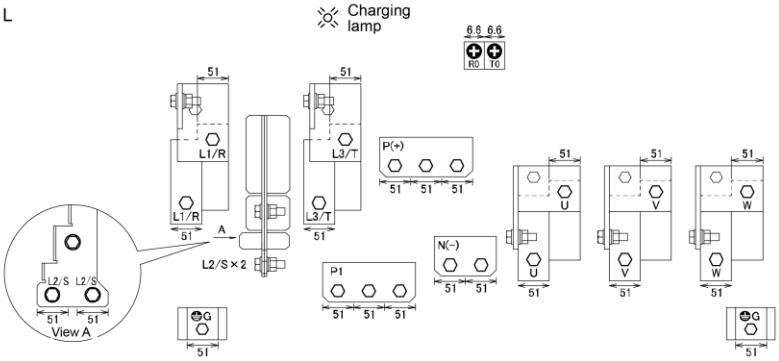

⚠WARNING⚠

The following terminals will have high voltage when power is ON.

Main circuit: [L1/R], [L2/S], [L3/T], [P1], [P(+)], [N(-)], [DB], [U], [V], [W], [R0], [T0],
contact output ([30A], [30B], [30C], [Y5A], [Y5C])

Insulation level

Main circuit - casing	: Basic insulation (overvoltage category III, pollution degree 2)
Main circuit - control circuit	: Reinforced insulation (overvoltage category III, pollution degree 2)
Contact output - control circuit	: Reinforced insulation (overvoltage category II, pollution degree 2)

Failure to observe this could result in electric shock.

[3] Recommended wire size (main circuit terminals)

The following wires are recommended unless special requirements exist.

📖 If using in an ambient temperature of 50 to 55 °C (122 to 131 °F), select wires by referring to the 55 °C field in Appendix F “Permissible Current of Insulated Wires” in “APPENDICES”.

■ 600 V polyvinyl chloride insulated wire (IV wire)

This wire is used in circuits except the inverter control circuit. The wire is difficult to twist and is not recommended for the inverter control circuit. The maximum permissible temperature for the insulated wire is 60 °C (140 °F).

■ 600 V heat-resistant polyvinyl chloride wire (HIV wire)

In comparison to the IV wire, this wire is smaller, more flexible, and the maximum permissible temperature for the insulated wire is 75 °C (167 °F) (higher), making it suitable for both the inverter main circuit and control circuit. However, the wiring distance should be short and the wire must be twisted for use in the inverter control circuit.

■ 600 V cross-linked polyethylene insulated wire (FSLC wire)

This wire is used mainly in the main circuit and the grounding circuits. The size is even smaller than the IV wire or the HIV wire and also more flexible. Due to these features, the wire is used to reduce the area occupied by wiring and to improve work efficiency in high temperature areas. The maximum permissible temperature for the insulated wire is 90 °C (194 °F). As a reference, Furukawa Electric Co., Ltd. produces Boardlex which satisfies these requirements.

■ Shielded-twisted wire for internal wiring of electronic/electrical equipment

This product is used in inverter control circuits. Use this wire with high shielding effect when risk of exposure to or effect of radiated noise and induced noise exists. Always use this wire when the wiring distance is long, even within the cabinet. Furukawa Electric’s BEAMEX S shielded cables XEBV or XEWV satisfy these requirements.

Table 2.2-2 Recommended wire sizes (common terminals)

Common terminals	Recommended wire size (mm^2) [AWG]	Remarks
Control power auxiliary input terminals [R0], [T0]	2.0 [14]	-

Panel internal temperature of 50 °C (122 °F) or lower

Table 2.2-3 Wire size (main power supply input and inverter output)

HHD specification: Heavy Duty applications
HND specification: Normal Duty applications

Power system	Standard applicable motor (kW)	Inverter type FRN****G2S-2G		Recommended wire size (mm^2)															
				Main power supply input [L1/R, L2/S, L3/T]								Inverter output [U, V, W]							
				With DC reactor (DCR)				Without DC reactor (DCR)				HHD specification				HND specification			
		HHD spec.	HND spec.	Permissible temperature (Note 1)			Current value (A)	Permissible temperature (Note 1)			Current value (A)	Permissible temperature (Note 1)			Current value (A)	Permissible temperature (Note 1)			Current value (A)
				60 °C	75 °C	90 °C		60 °C	75 °C	90 °C		60 °C	75 °C	90 °C		60 °C	75 °C	90 °C	
Three-phase 200 V	0.4	0003	-	2.0	2.0	2.0	1.6	2.0	2.0	2.0	3.1	2.0	2.0	2.0	3.0	-	-	-	-
	0.75	0005	-	2.0	2.0	2.0	3.2	2.0	2.0	2.0	5.3	2.0	2.0	2.0	5.0	-	-	-	-
	1.5	0008	-	2.0	2.0	2.0	6.1	2.0	2.0	2.0	9.5	2.0	2.0	2.0	8.0	-	-	-	-
	2.2	0011	-	2.0	2.0	2.0	8.9	2.0	2.0	2.0	13.2	2.0	2.0	2.0	11.0	-	-	-	-
	3.7	0018	-	2.0	2.0	2.0	15.0	5.5	2.0	2.0	22.2	3.5 *1	2.0	2.0	18.0	-	-	-	-
	5.5	0032	-	5.5	2.0	2.0	21.1	8.0	3.5	3.5	31.5	5.5	3.5	2.0	27.0	-	-	-	-
	7.5	0046	0032	8.0	3.5	2.0	28.8	14	5.5	5.5	42.7	14	5.5	3.5	37.0	8.0	3.5	3.5	31.8
	11	0059	0046	14	5.5	5.5	42.2	22 *3	14	8.0	60.7	14	8.0	5.5	49.0	14	8.0	5.5	46.2
	15	-	0059	22 *3	14	8.0	57.6	38 *4	14	14	80.1	-	-	-	-	22 *3	14	8.0	59.4
		0075	-	22	14	8 *5	57.6	38	14	14	80.1	22	14	8 *5	63.0	-	-	-	-
	18.5	0088	0075	38	14	14	71.0	60	22	14	97.0	38	14	14	76.0	38	14	14	74.8
	22	0115	0088	38	22	14	84.4	60	38	22	112	38	22	14	90.0	38	22	14	88.0
	30	-	0115	60	38	22	114	100 *6	60	38	151	-	-	-	-	60	38	22	115
		0146	-	60	38	22	114	100 *6	60	38	151	60	38	22	119	-	-	-	-
	37	-	0146	100 *6	38	38	138	-	60	38	185	-	-	-	-	100 *6	38	38	146
		0180	-	100	38	38	138	-	60	38	185	100	38	38	146	-	-	-	-
	45	0215	0180	100	60	38	167	-	100	60	225	-	60	38	180	-	60	38	180
	55	0288	0215	-	100	60	203	-	100	100	270	-	100	60	215	-	100	60	215
	75	-	0288	-	150 *7	100	282	-	-	-	-	-	-	-	-	-	150 *7	100	288
		0346	-	-	150	100	282	-	-	-	-	-	150	100	288	-	-	-	-
	90	-	0346	-	150	100	334	-	-	-	-	-	-	-	-	-	150	150	346
		0432	-	-	150	100	334	-	-	-	-	-	150	150	346	-	-	-	-
	110	-	0432	-	200	150	410	-	-	-	-	-	-	-	-	-	250	150	432

(Note 1) “IV wire” is used for permissible temperature of 60 °C (140 °F), "600 V HIV insulated wire” is used for 75 °C (167 °F), and “600 V cross-linked polyethylene insulated wire” is used for 90 °C (194 °F). These values are for aerial wiring.

Use compatible crimped terminals with model: (wire size) - (terminal screw size), except for those listed below.

*1) For compatible crimped terminals, please use model 3.5-R4 by JST Mfg. Co., Ltd. or equivalent.

*2) For compatible crimped terminals, please use model 8-4NS by JST Mfg. Co., Ltd. or equivalent.

*3) For compatible crimped terminals, please use model 22-S5 by JST Mfg. Co., Ltd. or equivalent.

*4) For compatible crimped terminals, please use model CB38-S5 by JST Mfg. Co., Ltd. or equivalent.

*5) For compatible crimped terminals, please use model 8-L6 by JST Mfg. Co., Ltd. or equivalent.

*6) For compatible crimped terminals, please use model CB100-S8 by JST Mfg. Co., Ltd. or equivalent.

*7) For compatible crimped terminals, please use model CB150-S10 by JST Mfg. Co., Ltd. or equivalent.

*8) Not applicable

Panel internal temperature of 50 °C (122 °F) or lower

Table 2.2-3 Wire size (main power supply input and inverter output) (cont.)

HHD specification: Heavy Duty applications
HND specification: Normal Duty applications

Power system	Standard applicable motor (kW)	Inverter type FRN****G2□-4G (Note 2)		Recommended wire size (mm²)															
				Main power supply input [L1/R, L2/S, L3/T]								Inverter output [U, V, W]							
				With DC reactor (DCR)				Without DC reactor (DCR)				HHD specification				HND specification			
		HHD Spec.	HND Spec.	Permissible temperature (Note 1)			Current value (A)	Permissible temperature (Note 1)			Current value (A)	Permissible temperature (Note 1)			Current value (A)	Permissible temperature (Note 1)			Current value (A)
				60 °C	75 °C	90 °C		60 °C	75 °C	90 °C		60 °C	75 °C	90 °C		60 °C	75 °C	90 °C	
Three-phase 400 V	0.4	0002	-	2.0	2.0	2.0	0.85	2.0	2.0	2.0	1.7	2.0	2.0	2.0	1.5	-	-	-	-
	0.75	0003	-	2.0	2.0	2.0	1.6	2.0	2.0	2.0	3.1	2.0	2.0	2.0	2.5	-	-	-	-
	1.5	0004	-	2.0	2.0	2.0	3.0	2.0	2.0	2.0	5.9	2.0	2.0	2.0	4.2	-	-	-	-
	2.2	0006	-	2.0	2.0	2.0	4.5	2.0	2.0	2.0	8.2	2.0	2.0	2.0	6.0	-	-	-	-
	3.7	0009	-	2.0	2.0	2.0	7.5	2.0	2.0	2.0	13.0	2.0	2.0	2.0	9.0	-	-	-	-
	5.5	0018	-	2.0	2.0	2.0	10.6	3.5	2.0	2.0	17.3	2.0	2.0	2.0	13.5	-	-	-	-
	7.5	0023	0018	2.0	2.0	2.0	14.4	5.5	2.0	2.0	23.2	3.5	2.0	2.0	18.5	3.5	2.0	2.0	17.5
	11	0035	0023	8.0	2.0	2.0	21.1	8.0	3.5	3.5	33.0	5.5	3.5	2.0	24.5	5.5	2.0	2.0	23.0
	15	-	0035	8.0	3.5	2.0	28.8	14	5.5	5.5	43.8	-	-	-	-	8.0	5.5	5.5	35.0
		0041	-	8 *5	3.5	2.0	28.8	14	5.5	5.5	43.8	8 *5	3.5	3.5	32.0	-	-	-	-
	18.5	-	0041	14	5.5	3.5	35.5	22	8 *5	5.5	52.3	-	-	-	-	14.0	5.5	3.5	41.0
		0045	-	14	5.5	3.5	35.5	22	8 *5	5.5	52.3	14	5.5	3.5	39.0	-	-	-	-
	22	0060	0045	14	5.5	5.5	42.2	22	14	8 *5	60.6	14	8 *5	5.5	45.0	14.0	8 *5	5.5	45.0
	30	-	0060	22	14	8 *5	57.0	38	14	14	77.9	-	-	-	-	22	14	8 *5	60.0
		0085	-	22	14	8.0	57.0	38	14	14	77.9	22	14	8.0	60.0	-	-	-	-
	37	0105	0085	38	14	8.0	68.5	60	22	14	94.3	38	14	14	75.0	38	14	14	75.0
	45	0139	0105	38	22	14	83.2	60	38	22	114	38	22	14	91.0	38	22	14	91.0
	55	0179	0139	60	22	22	102	100 *6	38	38	140	60	38	22	112	60	38	22	112
	75	-	0179	100 *6	38	38	138	-	-	-	-	-	-	-	-	100 *6	60	38	150
		0217	-	100	38	38	138	-	-	-	-	100	60	38	150	-	-	-	-
	90	0261	-	100	60	38	164	-	-	-	-	-	60	38	180	-	-	-	-
	110	0290	0217	-	100	60	201	-	-	-	-	-	100	60	216	-	100	60	217
	132	-	0261	-	100	60	238	-	-	-	-	-	-	-	-	-	100	100	261
		0376	-	-	100	60	238	-	-	-	-	-	100	100	260	-	-	-	-
	160	-	0290	-	150 *7	100	286	-	-	-	-	-	-	-	-	-	150 *7	100	290
		0431	-	-	150	100	286	-	-	-	-	-	150	100	325	-	-	-	-
	200	0547	0376	-	150	150	357	-	-	-	-	-	200	150	377	-	200	150	361
	220	0610	0431	-	200	150	390	-	-	-	-	-	250	150	432	-	200	150	415
	280	0739	0547	-	250	200	500	-	-	-	-	-	325	200	520	-	325	250	547
	315	0840	0610	-	325	250	559	-	-	-	-	-	325	250	585	-	2x200	250	610
	355	1039	0739	-	2x200	250	628	-	-	-	-	-	2x200	325	650	-	2x200	325	650
	400	1169	0840	-	2x200	325	705	-	-	-	-	-	2x250	325	740	-	2x250	325	740
	500	1385	1039	-	2x325	2x200	881	-	-	-	-	-	2x325	2x250	960	-	2x325	2x250	960
	560	-	1169	-	3x250	2x250	990	-	-	-	-	-	-	-	-	-	3x250	2x250	1040
	630	1480	1385	-	3x325	2x325	1115	-	-	-	-	-	3x325	2x325	1170	-	3x325	2x325	1170
	710	-	1480	-	4x250	3x250	1256	-	-	-	-	-	-	-	-	-	4x325	3x325	1386

(Note 1) “IV wire” is used for permissible temperature of 60 °C (140 °F), "600 V HIV insulated wire” is used for 75 °C (167 °F), and “600 V cross-linked polyethylene insulated wire” is used for 90 °C (194 °F). These values are for aerial wiring.

(Note 2) □ is replaced by a letter of the alphabet indicating the inverter type.

□
└ S (basic type), E (type with built-in EMC filter)

Use compatible crimped terminals with model: (wire size) - (terminal screw size), except for those listed below.

*1) For compatible crimped terminals, please use model 3.5-R4 by JST Mfg. Co., Ltd. or equivalent.

*2 to 4) Not applicable

*5) For compatible crimped terminals, please use model 8-L6 by JST Mfg. Co., Ltd. or equivalent.

*6) For compatible crimped terminals, please use model CB100-S8 by JST Mfg. Co., Ltd. or equivalent.

*7) For compatible crimped terminals, please use model CB150-S10 by JST Mfg. Co., Ltd. or equivalent.

*8) Not applicable

Panel internal temperature of 50 °C (122 °F) or lower

Table 2.2-3 Wire size (for DC reactor connection, for braking resistor connection, and for inverter grounding) (cont.)

HHD specification: Heavy Duty applications
HND specification: Normal Duty applications

Power system	Standard applicable motor (kW)	Inverter type FRN****G2S-2G		Recommended wire size (mm^2)														
				For DC reactor connection [P1, P(+)]				For braking resistor connection [P(+), DB] (Note 2)								For inverter grounding [⏚G]		
								HHD specification				HND specification						
		HHD spec.	HND spec.	Permissible temperature (Note 1)			Current value (A)	Permissible temperature (Note 1)			Current value (A)	Permissible temperature (Note 1)			Current value (A)	Permissible temperature (Note 1)		
				60 °C	75 °C	90 °C		60 °C	75 °C	90 °C		60 °C	75 °C	90 °C		60 °C	75 °C	90 °C
Three-phase 200 V	0.4	0003	-	2.0	2.0	2.0	2.0	2.0	2.0	2.0	1.2	-	-	-	-	2.0	2.0	2.0
	0.75	0005	-	2.0	2.0	2.0	4.0	2.0	2.0	2.0	1.6	-	-	-	-	2.0	2.0	2.0
	1.5	0008	-	2.0	2.0	2.0	7.5	2.0	2.0	2.0	3.6	-	-	-	-	2.0	2.0	2.0
	2.2	0011	-	2.0	2.0	2.0	11.0	2.0	2.0	2.0	3.5	-	-	-	-	2.0	2.0	2.0
	3.7	0018	-	3.5 *1	2.0	2.0	18.4	2.0	2.0	2.0	4.1	-	-	-	-	2.0	2.0	2.0
	5.5	0032	-	5.5	3.5	2.0	25.9	2.0	2.0	2.0	6.4	-	-	-	-	3.5	3.5	3.5
	7.5	0046	0032	14	5.5	3.5	35.3	2.0	2.0	2.0	6.1	2.0	2.0	2.0	6.4	5.5	5.5	5.5
	11	0059	0046	22 *3	8.0	5.5	51.7	2.0	2.0	2.0	9.1	2.0	2.0	2.0	6.1	5.5	5.5	5.5
	15	-	0059	38 *4	14	14	70.6	-	-	-	-	2.0	2.0	2.0	9.1	8.0	8.0	8.0
		0075	-	38	14	14	70.6	2.0	2.0	2.0	11.0	-	-	-	-	8 *5	8 *5	8 *5
	18.5	0088	0075	38	22	14	87.0	2.0	2.0	2.0	14.0	2.0	2.0	2.0	11.0	8 *5	8 *5	8 *5
	22	0115	0088	60	22	22	103	2.0	2.0	2.0	15.0	2.0	2.0	2.0	14.0	14	14	14
	30	-	0115	100 *6	38	38	140	-	-	-	-	2.0	2.0	2.0	15.0	14	14	14
		0146	-	100 *6	38	38	140	3.5	2.0	2.0	19.0	-	-	-	-	14	14	14
	37	-	0146	100 *6	60	38	170	-	-	-	-	3.5	2.0	2.0	19.0	22	22	22
		0180	-	100	60	38	170	5.5	3.5	2.0	25.0	-	-	-	-	22	22	22
	45	0215	0180	-	100	60	205	8.0	3.5	2.0	30.0	5.5	3.5	2.0	25.0	22	22	22
	55	0288	0215	-	100	60	249	14	5.5	3.5	37.0	8.0	3.5	2.0	30.0	22	22	22
	75	-	0288	-	150 *7	150 *7	345	-	-	-	-	14	5.5	3.5	37.0	22	22	22
		0346	-	-	150	150	345	14	8.0	5.5	49.0	-	-	-	-	22	22	22
	90	-	0346	-	200	150	409	-	-	-	-	14	8.0	5.5	49.0	22	22	22
		0432	-	-	200	150	409	22	14	8.0	62.0	-	-	-	-	22	22	22
	110	-	0432	-	250	200	502	-	-	-	-	22	14	8.0	62.0	38	38	38

(Note 1) “IV wire” is used for permissible temperature of 60 °C (140 °F), "600 V HIV insulated wire” is used for 75 °C (167 °F), and “600 V cross-linked polyethylene insulated wire” is used for 90 °C (194 °F). These values are for aerial wiring.

(Note 2) A braking unit (BU) (option) is necessary for FRN0346, 0432G2S-2G.

Use compatible crimped terminals with model: (wire size) - (terminal screw size), except for those listed below.

*1) For compatible crimped terminals, please use model 3.5-R4 by JST Mfg. Co., Ltd. or equivalent.

*2) For compatible crimped terminals, please use model 8-4NS by JST Mfg. Co., Ltd. or equivalent.

*3) For compatible crimped terminals, please use model 22-S5 by JST Mfg. Co., Ltd. or equivalent.

*4) For compatible crimped terminals, please use model CB38-S5 by JST Mfg. Co., Ltd. or equivalent.

*5) For compatible crimped terminals, please use model 8-L6 by JST Mfg. Co., Ltd. or equivalent.

*6) For compatible crimped terminals, please use model CB100-S8 by JST Mfg. Co., Ltd. or equivalent.

*7) For compatible crimped terminals, please use model CB150-S10 by JST Mfg. Co., Ltd. or equivalent.

*8) Not applicable

Panel internal temperature of 50 °C (122 °F) or lower

Table 2.2-3 Wire size (for DC reactor connection, for braking resistor connection, and for inverter grounding) (cont.)

HHD specification: Heavy Duty applications
HND specification: Normal Duty applications

Power system	Standard applicable motor (kW)	Inverter type FRN****G2□-4G (Note 2)		Recommended wire size (mm^2)														
				For DC reactor connection [P1, P(+)]				For braking resistor connection [P(+), DB] (Note 3)								For inverter grounding [⏚G]		
								HHD specification				HND specification						
		HHD Spec.	HND Spec.	Permissible temperature (Note 1)			Current value (A)	Permissible temperature (Note 1)			Current value (A)	Permissible temperature (Note 1)			Current value (A)	Permissible temperature (Note 1)		
				60 °C	75 °C	90 °C		60 °C	75 °C	90 °C		60 °C	75 °C	90 °C		60 °C	75 °C	90 °C
Three-phase 400 V	0.4	0002	-	2.0	2.0	2.0	1.0	2.0	2.0	2.0	0.8	-	-	-	-	2.0	2.0	2.0
	0.75	0003	-	2.0	2.0	2.0	2.0	2.0	2.0	2.0	1.1	-	-	-	-	2.0	2.0	2.0
	1.5	0004	-	2.0	2.0	2.0	3.7	2.0	2.0	2.0	1.8	-	-	-	-	2.0	2.0	2.0
	2.2	0006	-	2.0	2.0	2.0	5.6	2.0	2.0	2.0	1.8	-	-	-	-	2.0	2.0	2.0
	3.7	0009	-	2.0	2.0	2.0	9.2	2.0	2.0	2.0	2.1	-	-	-	-	2.0	2.0	2.0
	5.5	0018	-	2.0	2.0	2.0	13.0	2.0	2.0	2.0	3.2	-	-	-	-	2.0	2.0	2.0
	7.5	0023	0018	3.5	2.0	2.0	17.7	2.0	2.0	2.0	3.1	2.0	2.0	2.0	3.2	3.5	3.5	3.5
	11	0035	0023	5.5	3.5	2.0	25.9	2.0	2.0	2.0	4.5	2.0	2.0	2.0	3.1	3.5	3.5	3.5
	15	-	0035	14	5.5	3.5	35.3	-	-	-	-	2.0	2.0	2.0	4.5	5.5	5.5	5.5
		0041	-	14	5.5	3.5	35.3	2.0	2.0	2.0	5.7	-	-	-	-	5.5	5.5	5.5
	18.5	0045	0041	14	5.5	5.5	43.5	2.0	2.0	2.0	7.2	2.0	2.0	2.0	5.7	5.5	5.5	5.5
	22	0060	0045	22	8 *5	5.5	51.7	2.0	2.0	2.0	7.7	2.0	2.0	2.0	7.2	5.5	5.5	5.5
	30	-	0060	38	14	8 *5	69.9	-	-	-	-	2.0	2.0	2.0	7.7	8 *5	8 *5	8 *5
		0085	-	38	14	8.0	69.9	2.0	2.0	2.0	10.0	-	-	-	-	8.0	8.0	8.0
	37	0105	0085	38	22	14	83.9	2.0	2.0	2.0	12.0	2.0	2.0	2.0	10.0	8.0	8.0	8.0
	45	0139	0105	60	22	22	102	2.0	2.0	2.0	15.0	2.0	2.0	2.0	12.0	8.0	8.0	8.0
	55	0179	0139	60	38	22	125	3.5	2.0	2.0	19.0	2.0	2.0	2.0	15.0	14	14	14
	75	-	0179	100 *6	60	38	169	-	-	-	-	3.5	2.0	2.0	19.0	14	14	14
		0217	-	100	60	38	169	5.5	2.0	2.0	24.0	-	-	-	-	14	14	14
	90	0261	-	-	100	60	201	8.0	3.5	2.0	31.0	-	-	-	-	14	14	14
	110	0290	0217	-	100	60	246	8.0	5.5	3.5	35.0	5.5	2.0	2.0	24.0	22	22	22
	132	-	0261	-	150 *7	100	292	-	-	-	-	8.0	5.5	3.5	35.0	22	22	22
		0376	-	-	150	100	292	14	5.5	3.5	42.0	-	-	-	-	22	22	22
	160	-	0290	-	150 *7	150 *7	350	-	-	-	-	14	5.5	3.5	42.0	22	22	22
		0431	-		150	150	350	14	8.0	5.5	50.0	-	-	-	-	22	22	22
	200	0547	0376	-	250	150	437	22	14	8.0	62.0	14	8.0	5.5	50.0	38	38	38
	220	0610	0431	-	250	200	478	38	14	14	71.0	22	14	8.0	62.0	38	38	38
	280	0739	0547	-	2x200	250	613	60	22	14	100	38	14	14	71.0	38	38	38
	315	0840	0610	-	2x200	325	685	60	22	14	100	60	22	14	100	60	60	60
	355	1039	0739	-	2x250	2x200	770	60	38	22	124	60	22	14	100	60	60	60
	400	1169	0840	-	2x325	2x200	864	60	38	22	124	60	38	22	124	100	100	100
	500	1385	1039	-	3x325	2x325	1080	150	60	38	186	60	38	22	124	100	100	100
	560	-	1169	-	3x325	2x325	1213	-	-	-	-	100	38	38	140	150	150	150
	630	1480	1385	-	4x325	3x325	1367	150	100	60	212	150	60	38	186	150	150	150
	710	-	1480	-	5x325	3x325	1539	-	-	-	-	150	100	60	212	150	150	150

(Note 1) “IV wire” is used for permissible temperature of 60 °C (140 °F), "600 V HIV insulated wire” is used for 75 °C (167 °F), and “600 V cross-linked polyethylene insulated wire” is used for 90 °C (194 °F). These values are for aerial wiring.

(Note 2) □ is replaced by a letter of the alphabet indicating the inverter type.

□
└ S (basic type), E (type with built-in EMC filter)

(Note 3) A braking unit (BU) (option) is necessary for FRN0261 to 1480G2□-4G.

Use compatible crimped terminals with model: (wire size) - (terminal screw size), except for those listed below.

*1 to 4) Not applicable

*5) For compatible crimped terminals, please use model 8-L6 by JST Mfg. Co., Ltd. or equivalent.

*6) For compatible crimped terminals, please use model CB100-S8 by JST Mfg. Co., Ltd. or equivalent.

*7) For compatible crimped terminals, please use model CB150-S10 by JST Mfg. Co., Ltd. or equivalent.

*8) Not applicable

Panel internal temperature of 40 °C (104 °F) or lower

Table 2.2-4 Wire size (main power supply input and inverter output)

HHD specification: Heavy Duty applications
HND specification: Normal Duty applications

Power system	Standard applicable motor (kW)	Inverter type FRN****G2S-2G		Recommended wire size (mm^2)															
				Main power supply input [L1/R, L2/S, L3/T]								Inverter output [U, V, W]							
				With DC reactor (DCR)				Without DC reactor (DCR)				HHD specification				HND specification			
		HHD spec.	HND spec.	Permissible temperature (Note 1)			Current value (A)	Permissible temperature (Note 1)			Current value (A)	Permissible temperature (Note 1)			Current value (A)	Permissible temperature (Note 1)			Current value (A)
				60 °C	75 °C	90 °C		60 °C	75 °C	90 °C		60 °C	75 °C	90 °C		60 °C	75 °C	90 °C	
Three-phase 200 V	0.4	0003	-	2.0	2.0	2.0	1.6	2.0	2.0	2.0	3.1	2.0	2.0	2.0	3.0	-	-	-	-
	0.75	0005	-	2.0	2.0	2.0	3.2	2.0	2.0	2.0	5.3	2.0	2.0	2.0	5.0	-	-	-	-
	1.5	0008	-	2.0	2.0	2.0	6.1	2.0	2.0	2.0	9.5	2.0	2.0	2.0	8.0	-	-	-	-
	2.2	0011	-	2.0	2.0	2.0	8.9	2.0	2.0	2.0	13.2	2.0	2.0	2.0	11.0	-	-	-	-
	3.7	0018	-	2.0	2.0	2.0	15.0	3.5 *1	2.0	2.0	22.2	2.0	2.0	2.0	18.0	-	-	-	-
	5.5	0032	-	2.0	2.0	2.0	21.1	5.5	3.5	2.0	31.5	3.5	2.0	2.0	27.0	-	-	-	-
	7.5	0046	0032	3.5	2.0	2.0	28.8	8.0	5.5	3.5	42.7	5.5	3.5	3.5	37.0	5.5	3.5	2.0	31.8
	11	0059	0046	8.0	5.5	3.5	42.2	14	8.0	5.5	60.7	8.0	5.5	5.5	49.0	8.0	5.5	3.5	46.2
	15	-	0059	14	8.0	5.5	57.6	22 *3	14	14	80.1	-	-	-	-	14	8.0	5.5	59.4
		0075	-	14	8 *5	5.5	57.6	22	14	14	80.1	14	8 *5	5.5	63.0	-	-	-	-
	18.5	0088	0075	14	14	8 *5	71.0	38	22	14	97.0	22	14	8 *5	76.0	22	14	8 *5	74.8
	22	0115	0088	22	14	14	84.4	38	22	14	112	22	14	14	90.0	22	14	14	88.0
	30	-	0115	38	22	22	114	60	38	38	151	-	-	-	-	38	22	22	115
		0146	-	38	22	22	114	60	38	38	151	38	22	22	119	-	-	-	-
	37	-	0146	60	38	22	138	100 *6	60	38	185	-	-	-	-	60	38	22	146
		0180	-	60	38	22	138	100	60	38	185	60	38	22	146	-	-	-	-
	45	0215	0180	60	38	38	167	100	60	60	225	100	60	38	180	100	60	38	180
	55	0288	0215	100	60	38	203	-	100	60	270	100	60	60	215	100	60	60	215
	75	-	0288	-	100	100	282	-	-	-	-	-	-	-	-	150 *7	100	100	288
		0346	-	-	100	100	282	-	-	-	-	150	100	100	288	-	-	-	-
	90	-	0346	-	150	100	334	-	-	-	-	-	-	-	-	200	150	100	346
		0432	-	-	150	100	334	-	-	-	-	200	150	100	346	-	-	-	-
	110	-	0432	-	150	150	410	-	-	-	-	-	-	-	-	250	200	150	432

(Note 1) “IV wire” is used for permissible temperature of 60 °C (140 °F), "600 V HIV insulated wire” is used for 75 °C (167 °F), and “600 V cross-linked polyethylene insulated wire” is used for 90 °C (194 °F). These values are for aerial wiring.

Use compatible crimped terminals with model: (wire size) - (terminal screw size), except for those listed below.

*1) For compatible crimped terminals, please use model 3.5-R4 by JST Mfg. Co., Ltd. or equivalent.

*2) Not applicable

*3) For compatible crimped terminals, please use model 22-S5 by JST Mfg. Co., Ltd. or equivalent.

*4) Not applicable

*5) For compatible crimped terminals, please use model 8-L6 by JST Mfg. Co., Ltd. or equivalent.

*6) For compatible crimped terminals, please use model CB100-S8 by JST Mfg. Co., Ltd. or equivalent.

*7) For compatible crimped terminals, please use model CB150-S10 by JST Mfg. Co., Ltd. or equivalent.

*8) Not applicable

Panel internal temperature of 40 °C (104 °F) or lower

Table 2.2-4 Wire size (main power supply input and inverter output) (cont.)

HHD specification: Heavy Duty applications
HND specification: Normal Duty applications

Power system	Standard applicable motor (kW)	Inverter type FRN****G2□-4G (Note 2)		Recommended wire size (mm^2)															
				Main power supply input [L1/R, L2/S, L3/T]								Inverter output [U, V, W]							
				With DC reactor (DCR)				Without DC reactor (DCR)				HHD specification				HND specification			
		HHD spec.	HND spec.	Permissible temperature (Note 1)			Current value (A)	Permissible temperature (Note 1)			Current value (A)	Permissible temperature (Note 1)			Current value (A)	Permissible temperature (Note 1)			Current value (A)
				60 °C	75 °C	90 °C		60 °C	75 °C	90 °C		60 °C	75 °C	90 °C		60 °C	75 °C	90 °C	
Three-phase 400 V	0.4	0002	-	2.0	2.0	2.0	0.85	2.0	2.0	2.0	1.7	2.0	2.0	2.0	1.5	-	-	-	-
	0.75	0003	-	2.0	2.0	2.0	1.6	2.0	2.0	2.0	3.1	2.0	2.0	2.0	2.5	-	-	-	-
	1.5	0004	-	2.0	2.0	2.0	3.0	2.0	2.0	2.0	5.9	2.0	2.0	2.0	4.2	-	-	-	-
	2.2	0006	-	2.0	2.0	2.0	4.5	2.0	2.0	2.0	8.2	2.0	2.0	2.0	6.0	-	-	-	-
	3.7	0009	-	2.0	2.0	2.0	7.5	2.0	2.0	2.0	13.0	2.0	2.0	2.0	9.0	-	-	-	-
	5.5	0018	-	2.0	2.0	2.0	10.6	2.0	2.0	2.0	17.3	2.0	2.0	2.0	13.5	-	-	-	-
	7.5	0023	0018	2.0	2.0	2.0	14.4	3.5	2.0	2.0	23.2	2.0	2.0	2.0	18.5	2.0	2.0	2.0	17.5
	11	0035	0023	2.0	2.0	2.0	21.1	5.5	3.5	2.0	33.0	3.5	2.0	2.0	24.5	3.5	2.0	2.0	23.0
	15	-	0035	3.5	2.0	2.0	28.8	8.0	5.5	3.5	43.8	-	-	-	-	5.5	3.5	2.0	35.0
		0041	-	3.5	2.0	2.0	28.8	8 *5	5.5	3.5	43.8	5.5	3.5	2.0	32.0	-	-	-	-
	18.5	-	0041	5.5	3.5	3.5	35.5	14	8 *5	5.5	52.3	-	-	-	-	8 *5	5.5	3.5	41.0
		0045	-	5.5	3.5	3.5	35.5	14	8 *5	5.5	52.3	5.5	3.5	3.5	39.0	-	-	-	-
	22	0060	0045	8 *5	5.5	3.5	42.2	14	8 *5	5.5	60.6	8 *5	5.5	3.5	45.0	8 *5	5.5	3.5	45.0
	30	-	0060	14	8 *5	5.5	57.0	22	14	14	77.9	-	-	-	-	14	8 *5	5.5	60.0
		0085	-	14	8.0	5.5	57.0	22	14	8.0	77.9	14	8.0	5.5	60.0	-	-	-	-
	37	0105	0085	14	14	8.0	68.5	38	14	14	94.3	22	14	8.0	75.0	22	14	8.0	75.0
	45	0139	0105	22	14	14	83.2	38	22	22	114	22	14	14	91.0	22	14	14	91.0
	55	0179	0139	38	22	14	102	60	38	22	140	38	22	14	112	38	22	14	112
	75	-	0179	60	38	22	138	-	-	-	-	-	-	-	-	60	38	38	150
		0217	-	60	38	22	138	-	-	-	-	60	38	38	150	-	-	-	-
	90	0261	-	60	38	38	164	-	-	-	-	100	60	38	180	-	-	-	-
	110	0290	0217	100	60	38	201	-	-	-	-	100	60	60	216	100	60	60	217
	132	-	0261	100	100	60	238	-	-	-	-	-	-	-	-	150 *7	100	60	261
		0376	-	100	100	60	238	-	-	-	-	150	100	60	260	-	-	-	-
	160	-	0290	150 *7	100	100	286	-	-	-	-	-	-	-	-	150 *7	100	100	290
		0431	-	150	100	100	286	-	-	-	-	200	150	100	325	-	-	-	-
	200	0547	0376	200	150	100	357	-	-	-	-	200	150	100	377	200	150	100	361
	220	0610	0431	250	150	150	390	-	-	-	-	250	200	150	432	250	150	150	415
	280	0739	0547	325	200	150	500	-	-	-	-	325	250	200	520	-	250	200	547
	315	0840	0610	-	250	200	559	-	-	-	-	-	250	200	585	-	325	250	610
	355	1039	0739	-	325	250	628	-	-	-	-	-	325	250	650	-	325	250	650
	400	1169	0840	-	2x150	250	705	-	-	-	-	-	2x200	325	740	-	2x200	325	740
	500	1385	1039	-	2x250	2x200	881	-	-	-	-	-	2x250	2x200	960	-	2x250	2x200	960
	560	-	1169	-	2x250	2x200	990	-	-	-	-	-	-	-	-	-	2x325	2x250	1040
	630	1480	1385	-	2x325	2x250	1115	-	-	-	-	-	3x250	2x250	1170	-	3x250	2x250	1170
	710	-	1480	-	3x250	2x325	1256	-	-	-	-	-	-	-	-	-	3x325	2x325	1386

(Note 1) “IV wire” is used for permissible temperature of 60 °C (140 °F), "600 V HIV insulated wire” is used for 75 °C (167 °F), and “600 V cross-linked polyethylene insulated wire” is used for 90 °C (194 °F). These values are for aerial wiring.

(Note 2) □ is replaced by a letter of the alphabet indicating the inverter type.

□ S (basic type), E (type with built-in EMC filter)

Use compatible crimped terminals with model: (wire size) - (terminal screw size), except for those listed below.

*1) Not applicable

*2 to 4) Not applicable

*5) For compatible crimped terminals, please use model 8-L6 by JST Mfg. Co., Ltd. or equivalent.

*6) Not applicable

*7) For compatible crimped terminals, please use model CB150-S10 by JST Mfg. Co., Ltd. or equivalent.

*8) Not applicable

Panel internal temperature of 40 °C (104 °F) or lower

Table 2.2-4 Wire size (for DC reactor connection, for braking resistor connection, and for inverter grounding) (cont.)

HHD specification: Heavy Duty applications
HND specification: Normal Duty applications

Power system	Standard applicable motor (kW)	Inverter type FRN****G2S-2G		Recommended wire size (mm^2)														
				For DC reactor connection [P1, P(+)]				For braking resistor connection [P(+), DB] (Note 2)								For inverter grounding [⏚G]		
								HHD specification				HND specification						
		HHD spec.	HND spec.	Permissible temperature (Note 1)			Current value (A)	Permissible temperature (Note 1)			Current value (A)	Permissible temperature (Note 1)			Current value (A)	Permissible temperature (Note 1)		
				60 °C	75 °C	90 °C		60 °C	75 °C	90 °C		60 °C	75 °C	90 °C		60 °C	75 °C	90 °C
Three-phase 200 V	0.4	0003	-	2.0	2.0	2.0	2.0	2.0	2.0	2.0	1.2	-	-	-	-	2.0	2.0	2.0
	0.75	0005	-	2.0	2.0	2.0	4.0	2.0	2.0	2.0	1.6	-	-	-	-	2.0	2.0	2.0
	1.5	0008	-	2.0	2.0	2.0	7.5	2.0	2.0	2.0	3.6	-	-	-	-	2.0	2.0	2.0
	2.2	0011	-	2.0	2.0	2.0	11.0	2.0	2.0	2.0	3.5	-	-	-	-	2.0	2.0	2.0
	3.7	0018	-	2.0	2.0	2.0	18.4	2.0	2.0	2.0	4.1	-	-	-	-	2.0	2.0	2.0
	5.5	0032	-	3.5	2.0	2.0	25.9	2.0	2.0	2.0	6.4	-	-	-	-	3.5	3.5	3.5
	7.5	0046	0032	5.5	3.5	3.5	35.3	2.0	2.0	2.0	6.1	2.0	2.0	2.0	6.4	5.5	5.5	5.5
	11	0059	0046	14	5.5	5.5	51.7	2.0	2.0	2.0	9.1	2.0	2.0	2.0	6.1	5.5	5.5	5.5
	15	-	0059	14	14	8.0	70.6	-	-	-	-	2.0	2.0	2.0	9.1	8.0	8.0	8.0
		0075	-	14	14	8 *5	70.6	2.0	2.0	2.0	11.0	-	-	-	-	8 *5	8 *5	8 *5
	18.5	0088	0075	22	14	14	87.0	2.0	2.0	2.0	14.0	2.0	2.0	2.0	11.0	8 *5	8 *5	8 *5
	22	0115	0088	38	22	14	103	2.0	2.0	2.0	15.0	2.0	2.0	2.0	14.0	14	14	14
	30	-	0115	60	38	22	140	-	-	-	-	2.0	2.0	2.0	15.0	14	14	14
		0146	-	60	38	22	140	2.0	2.0	2.0	19.0	-	-	-	-	14	14	14
	37	-	0146	60	38	38	169	-	-	-	-	2.0	2.0	2.0	19.0	22	22	22
		0180	-	60	38	38	169	3.5	2.0	2.0	25.0	-	-	-	-	22	22	22
	45	0215	0180	100	60	38	205	3.5	3.5	2.0	30.0	3.5	2.0	2.0	25.0	22	22	22
	55	0288	0215	150 *7	100	60	249	5.5	3.5	3.5	37.0	3.5	3.5	2.0	30.0	22	22	22
	75	-	0288	-	150 *7	100	345	-	-	-	-	5.5	3.5	3.5	37.0	22	22	22
		0346	-	-	150	100	345	8.0	5.5	5.5	49.0	-	-	-	-	22	22	22
	90	-	0346	-	150	150	409	-	-	-	-	8.0	5.5	5.5	49.0	22	22	22
		0432	-	-	150	150	409	14	8.0	5.5	62.0	-	-	-	-	22	22	22
	110	-	0432	-	200	150	502	-	-	-	-	14	8.0	5.5	62.0	38	38	38

(Note 1) “IV wire” is used for permissible temperature of 60 °C (140 °F), "600 V HIV insulated wire” is used for 75 °C (167 °F), and “600 V cross-linked polyethylene insulated wire” is used for 90 °C (194 °F). These values are for aerial wiring.

(Note 2) A braking unit (BU) (option) is necessary for FRN0346, 0432G2S-2G.

Use compatible crimped terminals with model: (wire size) - (terminal screw size), except for those listed below.

*1) For compatible crimped terminals, please use model 3.5-R4 by JST Mfg. Co., Ltd. or equivalent.

*2 to 4) Not applicable

*5) For compatible crimped terminals, please use model 8-L6 by JST Mfg. Co., Ltd. or equivalent.

*6) Not applicable

*7) For compatible crimped terminals, please use model CB150-S10 by JST Mfg. Co., Ltd. or equivalent.

*8) Not applicable

Panel internal temperature of 40 °C (104 °F) or lower

Table 2.2-4 Wire size (for DC reactor connection, for braking resistor connection, and for inverter grounding) (cont.)

HHD specification: Heavy Duty applications
HND specification: Normal Duty applications

Power system	Standard applicable motor (kW)	Inverter type FRN****G2□-4G (Note 2)		Recommended wire size (mm²)														
				For DC reactor connection [P1, P(+)]				For braking resistor connection [P(+), DB] (Note 3)								For inverter grounding [⏚G]		
								HHD specification				HND specification						
		HHD spec.	HND spec.	Permissible temperature (Note 1)			Current value (A)	Permissible temperature (Note 1)			Current value (A)	Permissible temperature (Note 1)			Current value (A)	Permissible temperature (Note 1)		
				60 °C	75 °C	90 °C		60 °C	75 °C	90 °C		60 °C	75 °C	90 °C		60 °C	75 °C	90 °C
Three-phase 400 V	0.4	0002	-	2.0	2.0	2.0	1.0	2.0	2.0	2.0	0.8	-	-	-	-	2.0	2.0	2.0
	0.75	0003	-	2.0	2.0	2.0	2.0	2.0	2.0	2.0	1.1	-	-	-	-	2.0	2.0	2.0
	1.5	0004	-	2.0	2.0	2.0	3.7	2.0	2.0	2.0	1.8	-	-	-	-	2.0	2.0	2.0
	2.2	0006	-	2.0	2.0	2.0	5.6	2.0	2.0	2.0	1.8	-	-	-	-	2.0	2.0	2.0
	3.7	0009	-	2.0	2.0	2.0	9.2	2.0	2.0	2.0	2.1	-	-	-	-	2.0	2.0	2.0
	5.5	0018	-	2.0	2.0	2.0	13.0	2.0	2.0	2.0	3.2	-	-	-	-	2.0	2.0	2.0
	7.5	0023	0018	2.0	2.0	2.0	17.7	2.0	2.0	2.0	3.1	2.0	2.0	2.0	3.2	3.5	3.5	3.5
	11	0035	0023	3.5	2.0	2.0	25.9	2.0	2.0	2.0	4.5	2.0	2.0	2.0	3.1	3.5	3.5	3.5
	15	-	0035	5.5	3.5	3.5	35.3	-	-	-	-	2.0	2.0	2.0	4.5	5.5	5.5	5.5
		0041	-	5.5	3.5	3.5	35.3	2.0	2.0	2.0	5.7	-	-	-	-	5.5	5.5	5.5
	18.5	0045	0041	8 *5	5.5	3.5	43.5	2.0	2.0	2.0	7.2	2.0	2.0	2.0	5.7	5.5	5.5	5.5
	22	0060	0045	14	5.5	5.5	51.7	2.0	2.0	2.0	7.7	2.0	2.0	2.0	7.2	5.5	5.5	5.5
	30	-	0060	14	14	8 *5	69.9	-	-	-	-	2.0	2.0	2.0	7.7	8 *5	8 *5	8 *5
		0085	-	14	14	8.0	69.9	2.0	2.0	2.0	10.0	-	-	-	-	8.0	8.0	8.0
	37	0105	0085	22	14	14	83.9	2.0	2.0	2.0	12.0	2.0	2.0	2.0	10.0	8.0	8.0	8.0
	45	0139	0105	38	22	14	102	2.0	2.0	2.0	15.0	2.0	2.0	2.0	12.0	8.0	8.0	8.0
	55	0179	0139	38	38	22	125	2.0	2.0	2.0	19.0	2.0	2.0	2.0	15.0	14	14	14
	75	-	0179	60	38	38	169	-	-	-	-	2.0	2.0	2.0	19.0	14	14	14
		0217	-	60	38	38	169	3.5	2.0	2.0	24.0	-	-	-	-	14	14	14
	90	0261	-	100	60	38	201	5.5	3.5	2.0	31.0	-	-	-	-	14	14	14
	110	0290	0217	150 *7	100	60	246	5.5	3.5	3.5	35.0	3.5	2.0	2.0	24.0	22	22	22
	132	-	0261	150 *7	100	100	292	-	-	-	-	5.5	3.5	3.5	35.0	22	22	22
		0376	-	150	100	100	292	8.0	5.5	3.5	42.0	-	-	-	-	22	22	22
	160	-	0290	200 *8	150 *7	100	350	14	5.5	5.5	50.0	8.0	5.5	3.5	42.0	22	22	22
		0431	-	200	150	100	350	14	5.5	5.5	50.0	8.0	5.5	3.5	42.0	22	22	22
	200	0547	0376	250	200	150	437	14	8.0	5.5	62.0	14	5.5	5.5	50.0	38	38	38
	220	0610	0431	325	200	150	478	14	14	8.0	71.0	14	8.0	5.5	62.0	38	38	38
	280	0739	0547	-	325	250	613	38	22	14	100	14	14	8.0	71.0	38	38	38
	315	0840	0610	-	325	250	685	38	22	14	100	38	22	14	100	60	60	60
	355	1039	0739	-	2x200	325	770	38	22	22	124	38	22	14	100	60	60	60
	400	1169	0840	-	2x250	2x200	864	38	22	22	124	38	22	22	124	100	100	100
	500	1385	1039	-	2x325	2x250	1080	100	60	38	186	38	22	22	124	100	100	100
	560	-	1169	-	3x325	2x325	1213	-	-	-	-	60	38	22	140	150	150	150
	630	1480	1385	-	3x325	2x325	1367	100	60	60	212	100	60	38	186	150	150	150
	710	-	1480	-	4x325	3x325	1539	-	-	-	-	100	60	60	212	150	150	150

(Note 1) “IV wire” is used for permissible temperature of 60 °C (140 °F), "600 V HIV insulated wire” is used for 75 °C (167 °F), and “600 V cross-linked polyethylene insulated wire” is used for 90 °C (194 °F). These values are for aerial wiring.

(Note 2) □ is replaced by a letter of the alphabet indicating the inverter type.

□
└ S (basic type), E (type with built-in EMC filter)

(Note 3) A braking unit (BU) (option) is necessary for FRN0261 to 1480G2□-4G.

Use compatible crimped terminals with model: (wire size) - (terminal screw size), except for those listed below.

*1 to 4) Not applicable

*5) For compatible crimped terminals, please use model 8-L6 by JST Mfg. Co., Ltd. or equivalent.

*6) Not applicable

*7) For compatible crimped terminals, please use model CB150-S10 by JST Mfg. Co., Ltd. or equivalent.

*8) For compatible crimped terminals, please use model CB200-S10 by JST Mfg. Co., Ltd. or equivalent.

Panel internal temperature of 40 °C (104 °F) or lower

Table 2.2-3 Wire size (main power supply input and inverter output) (cont.)

HD / ND specifications *102

HD specification: Heavy Duty applications
ND specification: Normal Duty applications

Power system	Standard applicable motor (kW)	Inverter type FRN****G2□-4G (Note 2)		Recommended wire size (mm^2)															
				Main power supply input [L1/R, L2/S, L3/T]								Inverter output [U, V, W]							
				With DC reactor (DCR)				Without DC reactor (DCR)				HD specification				ND specification			
		HD Spec.	ND Spec.	Permissible temperature (Note 1)			Current value (A)	Permissible temperature (Note 1)			Current value (A)	Permissible temperature (Note 1)			Current value (A)	Permissible temperature (Note 1)			Current value (A)
				60 °C	75 °C	90 °C		60 °C	75 °C	90 °C		60 °C	75 °C	90 °C		60 °C	75 °C	90 °C	
Three-phase 400 V	37	0085	-	14	14	8.0	68.5	38	14	14	94.3	22	14	8.0	75.0	-	-	-	-
	45	0105	0085	22	14	14	83.2	38	22	22	114	22	14	14	91.0	22	14	14	85.0
	55	0139	0105	38	22	14	102	60	38	22	140	38	22	14	112	38	22	14	105
	75	-	0139	60	38	22	138	-	-	-	-	-	-	-	-	60	38	22	139
		0179	-	60	38	22	138	-	-	-	-	60	38	38	150	-	-	-	-
	90	-	0179	60	38	38	164	-	-	-	-	-	-	-	-	100 *6	60	38	179
		0217	-	60	38	38	164	-	-	-	-	100	60	38	180	-	-	-	-
	110	0261	0217	100	60	38	201	-	-	-	-	100	60	60	217	100	60	60	217
	132	0290	0261	100	100	60	238	-	-	-	-	150 *7	100	60	261	150 *7	100	60	261
	160	-	0290	150 *7	100	100	286	-	-	-	-	-	-	-	-	150 *7	100	100	290
		0376	-	150	100	100	286	-	-	-	-	200	150	100	325	-	-	-	-
	200	0431	0376	200	150	100	357	-	-	-	-	200	150	100	377	200	150	100	376
	220	0547	0431	250	150	150	390	-	-	-	-	250	200	150	432	250	200	150	431
	250	0610	-	250	200	150	443	-	-	-	-	325	200	150	477	-	-	-	-
	280	-	0547	325	200	150	500	-	-	-	-	-	-	-	-	-	250	200	547
	315	0739	0610	-	250	200	559	-	-	-	-	-	250	200	585	-	325	250	610
	355	0840	-	-	325	250	628	-	-	-	-	-	325	250	650	-	-	-	-
	400	1039	0739	-	2x150	250	705	-	-	-	-	-	2x200	325	740	-	2x200	325	739
	450	1169	0840	-	2x200	325	789	-	-	-	-	-	2x200	2x150	840	-	2x200	2x150	840
	560	1385	1039	-	2x250	2x200	990	-	-	-	-	-	2x325	2x250	1040	-	2x325	2x250	1039
	630	-	1169	-	2x325	2x250	1115	-	-	-	-	-	-	-	-	-	3x250	2x250	1169
	710	1480	1385	-	3x250	2x325	1256	-	-	-	-	-	3x325	2x325	1386	-	3x325	2x325	1386
	800	-	1480	-	3x325	3x250	1415	-	-	-	-	-	-	-	-	-	4x250	3x250	1480

(Note 1) “IV wire” is used for permissible temperature of 60 °C (140 °F), “600 V HIV insulated wire” is used for 75 °C (167 °F), and “600 V cross-linked polyethylene insulated wire” is used for 90 °C (194 °F). These values are for aerial wiring.

(Note 2) □ is replaced by a letter of the alphabet indicating the inverter type.

□
└ S (basic type), E (type with built-in EMC filter)

Use compatible crimped terminals with model: (wire size) - (terminal screw size), except for those listed below.

*1 to 5) Not applicable

*6) For compatible crimped terminals, please use model CB100-S8 by JST Mfg. Co., Ltd. or equivalent.

*7) For compatible crimped terminals, please use model CB150-S10 by JST Mfg. Co., Ltd. or equivalent.

*8) Not applicable

*102: Supported with ROM0600 or later.

Panel internal temperature of 40 °C (104 °F) or lower

Table 2.2-3 Wire size (for DC reactor connection, for braking resistor connection, and for inverter grounding) (cont.)

HD / ND specifications *102

HD specification: Heavy Duty applications
ND specification: Normal Duty applications

Power system	Standard applicable motor (kW)	Inverter type FRN****G2□-4G (Note 2)		Recommended wire size (mm^2)															
				For DC reactor connection [P1, P(+)]				For braking resistor connection [P(+), DB] (Note 3)								For inverter grounding [⏚G]		
								HD specification				ND specification						
		HD Spec.	ND Spec.	Permissible temperature (Note 1)			Current value (A)	Permissible temperature (Note 1)			Current value (A)	Permissible temperature (Note 1)			Current value (A)	Permissible temperature (Note 1)		
				60 °C	75 °C	90 °C		60 °C	75 °C	90 °C		60 °C	75 °C	90 °C		60 °C	75 °C	90 °C
Three-phase 400 V	37	0085	-	22	14	14	83.9	2.0	2.0	2.0	10.0	-	-	-	-	8.0	8.0	8.0
	45	0105	0085	38	22	14	102	2.0	2.0	2.0	12.0	2.0	2.0	2.0	10.0	8.0	8.0	8.0
	55	0139	0105	38	38	22	125	2.0	2.0	2.0	15.0	2.0	2.0	2.0	12.0	14	14	14
	75	-	0139	60	38	38	169	-	-	-	-	2.0	2.0	2.0	15.0	14	14	14
		0179	-	60	38	38	169	2.0	2.0	2.0	19.0	-	-	-	-	14	14	14
	90	-	0179	100 *6	60	38	201	-	-	-	-	2.0	2.0	2.0	19.0	14	14	14
		0217	-	100	60	38	201	3.5	2.0	2.0	24.0	-	-	-	-	14	14	14
	110	0261	0217	150 *7	100	60	246	5.5	3.5	3.5	35.0	3.5	2.0	2.0	24.0	22	22	22
	132	0290	0261	150 *7	100	100	292	8.0	5.5	3.5	42.0	5.5	3.5	3.5	35.0	22	22	22
	160	-	0290	-	150 *7	100	350	-	-	-	-	8.0	5.5	3.5	42.0	22	22	22
		0376	-	200	150	100	350	14	5.5	5.5	50.0	-	-	-	-	22	22	22
	200	0431	0376	250	200	150	437	14	8.0	5.5	60.0	14	5.5	5.5	50.0	38	38	38
	220	0547	0431	325	200	150	478	14	14	8.0	71.0	14	8.0	5.5	62.0	38	38	38
	250	0610	-	-	250	200	543	38	22	14	100	-	-	-	-	38	38	38
	280	-	0547	-	325	250	613	-	-	-	-	14	14	8.0	71.0	38	38	38
	315	0739	0610	-	325	250	685	38	22	14	100	38	22	14	100	60	60	60
	355	0840	-	-	2x200	325	770	38	22	22	124	-	-	-	-	60	60	60
	400	1039	0739	-	2x250	2x200	864	38	22	22	124	38	22	22	124	100	100	100
	450	1169	0840	-	2x250	2x200	967	60	38	38	150	38	22	22	124	100	100	100
	560	1385	1039	-	3x325	2x325	1213	100	60	38	186	60	38	22	140	150	150	150
	630	-	1169	-	3x325	2x325	1367	-	-	-	-	100	60	38	186	150	150	150
	710	1480	1385	-	4x325	3x325	1539	100	60	60	212	100	60	60	212	150	150	150
	800	-	1480	-	4x325	3x325	1734	-	-	-	-	100	60	60	212	150	150	150

(Note 1) “IV wire” is used for permissible temperature of 60 °C (140 °F), "600 V HIV insulated wire” is used for 75 °C (167 °F), and “600 V cross-linked polyethylene insulated wire” is used for 90 °C (194 °F). These values are for aerial wiring.

(Note 2) □ is replaced by a letter of the alphabet indicating the inverter type.

□
└ S (basic type), E (type with built-in EMC filter)

(Note 3) A braking unit (BU) (option) is necessary for FRN0261 to 1480G2□-4G.

Use compatible crimped terminals with model: (wire size) - (terminal screw size), except for those listed below.

*1 to 5) Not applicable

*6) For compatible crimped terminals, please use model CB100-S8 by JST Mfg. Co., Ltd. or equivalent.

*7) For compatible crimped terminals, please use model CB150-S10 by JST Mfg. Co., Ltd. or equivalent.

*8) Not applicable

*102: Supported with ROM0600 or later.

[4] Terminal function description (main circuit terminals)

Classification	Terminal symbol	Terminal command	Detailed specifications
Main circuit	L1/R, L2/S, L3/T	Main power supply input	Connect a three-phase power supply.
	U, V, W	Inverter output	Terminals to connect three-phase motors.
	P1, P(+)	For DC reactor connection	Connect a DC reactor (DCR) (option). Be sure to connect if using motors with output of 75 kW or higher.
	P(+), N(-)	For direct current bus connection	Used for connection to direct current intermediate circuits of other inverters and PWM converters.
	P(+), DB	For braking resistor connection	Connect braking resistor (DB) (option) terminal [P(+)] and [DB] (wiring length: 5 meters (16.4 ft) or shorter).
	⏚G	For inverter chassis (case) grounding	This is the grounding terminal for the inverter chassis (casing) and motor. Ground to the earth at one end, and connect to the motor grounding terminal at the other end. Two of these terminals have been provided.
	R0, T0	Control power auxiliary input	If wishing to retain the integrated alarm signal issued if the protective function is triggered even when the inverter main power supply is cut off, or to constantly display the keypad, connect this terminal to the power supply (FRN0008 to 0432G2S-2G / FRN0004 to 1480G2□-4G).

Wire in the following order.

(1) Inverter grounding terminal ([⏚G])
(2) Inverter output terminals ([U], [V], [W]) motor grounding terminal ([⏚G])
(3) Direct current reactor connection terminals ([P1], [P(+)])*
(4) Braking resistor connection terminals ([P(+)], [DB])*
(5) Direct current bus connection terminals ([P(+)], [N(-)])*
(6) Main power supply input terminals ([L1/R], [L2/S], [L3/T])
(7) Control power auxiliary input terminals ([R0], [T0]) * (FRN0008 to 0432G2S-2G / FRN0004 to 1480G2□-4G)
*: Connect if necessary.

(1) Inverter grounding terminal [⏚G]

Be sure to ground grounding terminals to ensure safety, and as a noise countermeasure. In order to prevent accidents such as an electric shock or fire, users are obligated by the Electrical Equipment Technical Standards to carry out grounding work for the metal frames of electrical equipment.

Ground the inverter in compliance with the national or local electric code.

(2) Inverter output terminals [U], [V], [W] motor grounding terminal [⏚G].

1) Connect the three-phase motor terminals [U], [V], and [W]while matching the phase sequence.
2) Connect the ground line of the outputs ([U], [V], [W]) to the ground terminal ([⏚G]).

Note If there are multiple inverter and motor combinations, do not use multi-core cables for the purpose of bundling and storing wiring for multiple combinations.

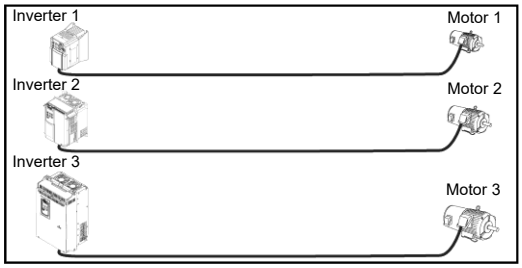

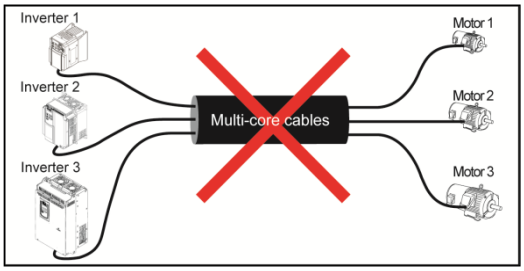

(3) Direct current reactor connection terminals [P1], [P(+)]

Connect a DC reactor (DCR).

1) Remove the shorting bar from terminals [P1] and [P(+)].
   (A shorting bar is not connected to FRN0346, 0432G2S-2G / FRN0217 to 1480G2□-4G).
2) Connect the DC reactor [P1] and [P(+)] terminals.

Note
- Keep the wiring length below 10 meters (32.8 ft).
- Do not remove the shorting bar if the direct current reactor is not used.
- Be sure to connect if using motors with output of 75 kW or higher.
- Direct current reactors do not have to be connected when connecting PWM converters.

⚠WARNING

- Be sure to connect an optional DC reactor when the capacity of the power supply transformer exceeds 500 kVA, and is at least 10 times the inverter rated capacity.
- Be sure to connect if using motors with output of 75 kW or higher.

Failure to observe this could result in fire.

(4) Braking resistor connection terminals [P(+)], [DB]

Table 2.2-5

Type of Inverter		Braking transistor	Built-in braking resistor	Additional connected devices (option)	Work procedure
FRN****G2S-2G	FRN****G2□-4G				
0003 to 0046	0002 to 0023	Built-in	Built-in	Breaking resistor (higher capacity)	Perform 1), 2), 3), and 4).
0059 to 0288	0035 to 0217	Built-in	Not equipped	Breaking resistor	Perform 2), 3), and 4).

If there is insufficient capacity with the built-in braking resistor in models FRN0003 to 0046G2S-2G/FRN0002 to 0023G2□-4G (for frequent operation or high inertial load operation, etc.), it will be necessary to use an optional braking resistor (standard type or 10%ED type) to increase braking ability. If doing so, it will be necessary to remove the built-in braking resistor. Use the following procedure to remove the built-in braking resistor.

1) On FRN0003 to 0018G2S-2G / FRN0002 to 0009G2□-4G, disconnect the built-in braking resistor wiring connected to terminals [P(+)] and [DB]. On FRN0032, 0046G2S-2G / FRN0018, 0023G2□-4G, disconnect the built-in braking resistor wiring connected to terminal [DB] and the internal relay terminal (see figure below). Insulate the ends of the disconnected wires with insulating tape, etc.

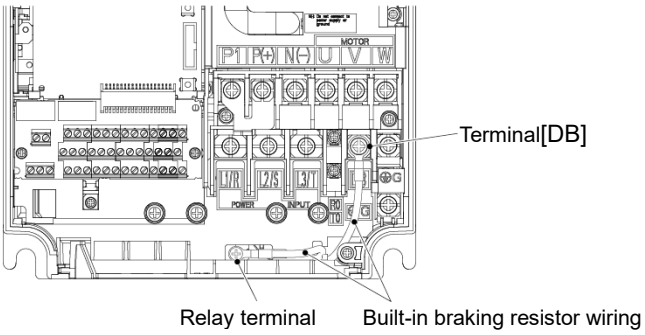

Fig. 2.2-9

2) Connect braking resistor terminals [P(+)] and [DB].
The internal relay terminal is not used on FR0032, 0046G2S-2G / FRN0018, 0023G2□-4G.

3) Mount the inverter main body and the braking resistor such that the wiring length will be less than 5 m (16ft) and route the two wires twisted or in contact with each other (parallel).

4) Change the DB resistor electronic thermal setting.

⚠ WARNING

When connecting a DC braking resistor, never connect it to terminals other than terminals [P(+)] and [DB].

Failure to observe this could result in fire.

(5) Direct current bus connection terminals [P(+)], [N(-)]

Table 2.2-6

Type of Inverter		Braking transistor	Built-in braking resistor	Additional connected devices (option)	Connected device, terminal
FRN****G2S-2G	FRN****G2□-4G				
0346 to 0432	0261 to 1480	Not equipped	Not equipped	Braking unit	Between inverter and braking unit: [P(+)], [N(-)]
				Breaking resistor	Between braking unit and braking resistor: [P(+)], [DB]

1) Braking unit/braking resistor (option connection)

A braking unit and braking resistor are necessary on FRN0346, 0432G2S-2G / FRN0261 to 1480G2□-4G.

Connect braking unit terminals [P(+)] and [N(-)] to inverter terminals [P(+)] and [N(-)]. Wire so that the wiring length is no longer than 5 m (16 ft), and either twist or wire the two wires closely together (in parallel).

Connect braking resistor terminals [P(+)] and [DB] to braking unit terminals [P(+)] and [DB]. Wire so that the wiring length is no longer than 10 m (33 ft), and either twist or wire the two wires closely together (in parallel).

Refer to the braking unit instruction manual for details on other wiring, etc.

2) Connection of other devices

The direct current intermediate circuit of other inverters and PWM converters can be connected.

Note Contact Fuji Electric if using terminals [P(+)] and [N(-)] for DC bus bar connection.

(6) Main power supply input terminals [L1/R], [L2/S], and [L3/T] (three-phase input)

Connect a three-phase power supply.

1) To ensure safety, confirm that the molded case circuit breaker (MCCB) or magnetic contactor (MC) is OFF prior to wiring the main power supply.

2) Connect the power lines ([L1/R], [L2/S], [L3/T]) via a molded case circuit breaker (MCCB) or earth leakage circuit breaker (ELCB)*, and if necessary, via a magnetic contactor (MC). There is no need to align the power line and inverter phase sequence.

* With overcurrent protection function

Tip In the case of emergencies such as when the inverter protective function is activated, it is recommended that the inverter be disconnected from the power supply, and that an MC which allows manual disconnection of the power supply be installed to prevent magnification of failure or accident.

(7) Control power auxiliary input terminals [R0], [T0] (FRN0008 to 0432G2S-2G / FRN0004 to 1480G2□-4G)

The inverter can be run even without inputting the power supply to the control power auxiliary input terminals. However, control power will also be lost by cutting off the inverter main power supply, and therefore all inverter output signals will stop, and the keypad will no longer display.

If wishing to retain the integrated alarm signal issued if the protective function is activated even when the inverter main power supply is cut off, or to constantly display the keypad, connect the control power auxiliary input terminals to the power supply. If the inverter is equipped with a magnetic contactor (MC) at the input side, wire from the magnetic contactor (MC) input side (primary side).

Terminal rating: 200 to 240 VAC, 50/60 Hz, maximum current 1.0 A (FRN0003 to 0115G2S-2G)
200 to 230 VAC, 50/60 Hz, maximum current 1.0 A (FRN0146 to 0432G2S-2G)
380 to 480 VAC, 50/60 Hz, maximum current 0.5 A (FRN****G2□-4G)

Note When using the earth leakage breaker, connect terminals [R0], [T0] to the output side of the earth leakage breaker. When connections are made to the input side of the earth leakage breaker, the earth leakage breaker will malfunction because the inverter input is three-phase and the terminals [R0], [T0] are single phase. When connecting to terminals [R0], [T0] to the input side of the earth leakage breaker, make sure that the connection is done through an insulating transformer or, alternatively, through the auxiliary B contacts of the magnetic contactor as shown in the figure below.

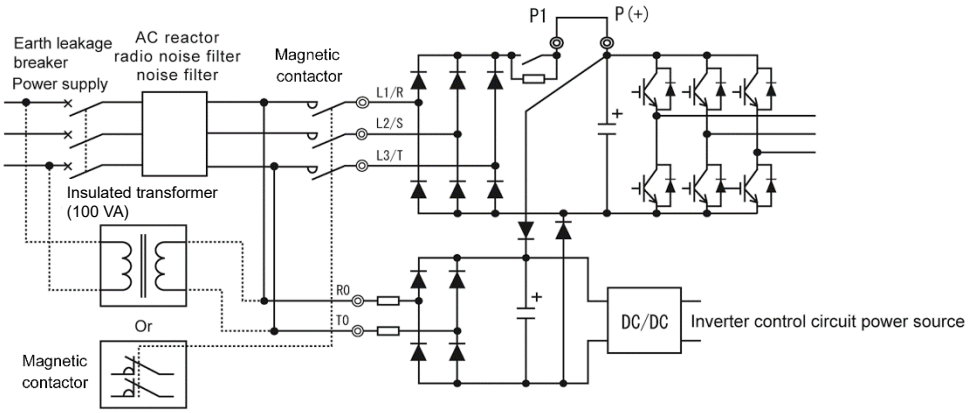

Fig. 2.2-10 Earth leakage circuit breaker connection

Note When connecting with the PWM converter, do not connect power source directly to the inverter's auxiliary power input terminals ([R0], [T0]) for control circuit. Insert an insulating transformer or the auxiliary B contacts of a magnetic contactor on the power supply side.

Refer to the PWM converter instruction manual for PWM converter side connection examples.
There are cases where the power supply is connected directly to [R0] and [T0] on older models, and caution is therefore required particularly when replacing inverters.

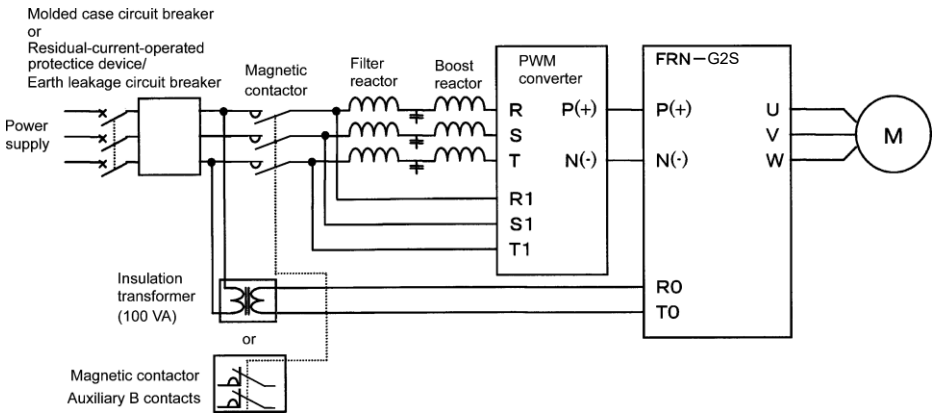

Fig. 2.2-11 Example of connection of [R0], [T0] terminals in combination with PWM converter

2.2.6 Control circuit terminals (common to all models)

[1] Screw specifications and recommended wire size (control circuit terminals)

The specifications for the screws used in the control circuit wiring and the wire sizes are shown below.

The control circuit terminal block is common, regardless of the inverter capacity.

The control terminal block for the conventional model MEGA (GS1) is available as an option to allow round crimp terminals to be connected.

Refer to Chapter 11 “11.18 Control Terminal Block (G1S Compatible) OPC-G1-TB1” for details.

Table 2.2-7 Screw specifications and recommended wire sizes

Common terminal	Screw specification		Permissible wire size mm^2 (AWG)	Recommended wire size mm^2 (AWG)	Driver (shape of tip)	Wire coating removal size	Rod terminal *1 Terminal block opening dimension
	Size	Tightening torque N·m (lb-in)					
Control circuit terminal	M3	0.5 to 0.6 (4.43 to 5.31)	0.14 to 1.5 (26 to 16)	0.3 to 1.25 (22 to 16)	Minus (0.6 x 3.5) mm	6 mm (0.24 in)	A1 *2 (2.35 x 1.45) mm

*1: Recommended rod terminal: Phoenix Contact Refer to Table 2.2-8 below for details.

*2: Defined according to IEC/EN 60947-1.

Table 2.2-8 Recommended rod terminals

Wire size	Type	
	With insulating collar	Without insulating collar
0.34 mm^2 (AWG22)	AI 0.34-6 TQ	A 0.34-7
0.5 mm^2 (AWG20)	AI 0.5-6 WH	A 0.5-6
0.75 mm^2 (AWG18)	AI 0.75-6 GY	A 0.75-6
1.25 mm^2 (AWG16)	AI 1.5-6-BK	A 1.5-7

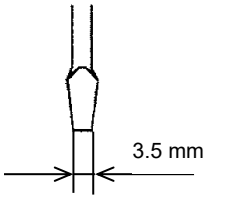

Driver tip shape

[2] Terminal layout diagram (control circuit terminals)

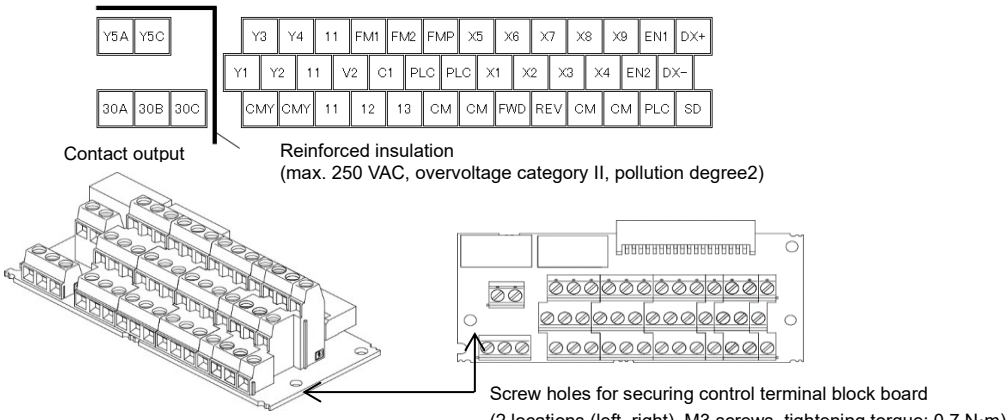

Fig. 2.2-12

⚠ WARNING ⚠

The following terminals will have high voltage when power is ON.
Control terminals: contact output ([30A], [30B], [30C], [Y5A], [Y5C])
Insulation level
Contact output – control circuit : Reinforced insulation (overvoltage category II, pollution degree 2)

Failure to observe this could result in electric shock.

[3] Control circuit wiring precautions

■ **FRN0346, 0432G2S-2G, FRN0376 to 1480G2□-4G**

(1) Run the wiring along the plate on the left side of the inverter as shown in Fig. 2.2-13.

(2) Secure the wiring to wire holders with cable ties (INSULOK, etc.)

Use cable ties with width of no greater than 3.8 mm (0.15 in), and thickness of no greater than 1.5 mm (0.06 in).

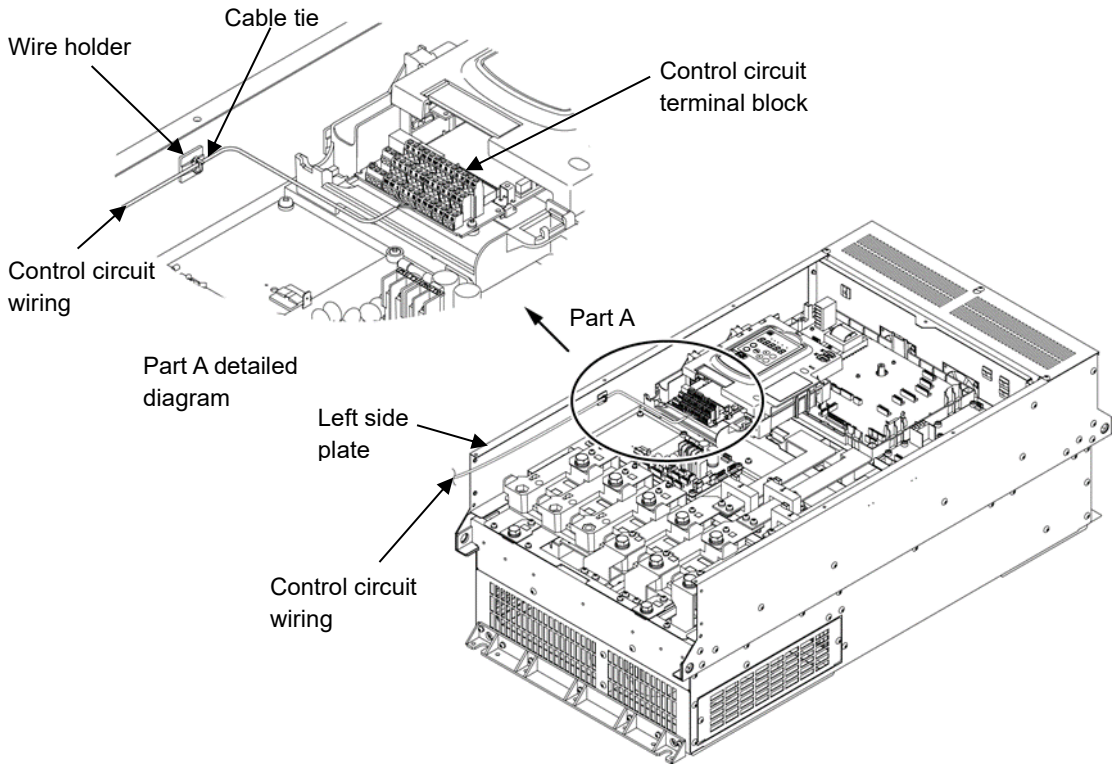

Fig. 2.2-13 Control circuit wiring route and securing locations

Note
- The control circuit terminal lines should be routed as far as possible from the main circuit routing. Malfunction may occur due to noise.
- To prevent direct contact with the main circuit live sections (such as the main circuit terminal block), route the control circuit wiring inside the inverter as bundles using cable ties.

⚠WARNING⚠

Control signal lines generally do not have a reinforced insulation coating, and therefore if control signal lines come into contact with live parts of the main circuit, the insulation coating may be damaged for some reason. In such a case, there is a danger that high voltage from the main circuit will be applied to the control signal lines, and therefore care should be taken to ensure that they do not come into contact with live parts of the main circuit.

Failure to observe this could result in an accident or electric shock.

⚠CAUTION

Noise is produced by the inverter, motors, and wiring.

Take care to prevent the malfunction of peripheral sensors and devices.

Failure to observe this could result in an accident.

[4] Description of terminal functions (control circuit terminals)

A description of control circuit terminal functions is shown in Table 2.2-9. The control circuit terminal connection method differs based on function code settings to suit the purpose for which the inverter is used.

Wire appropriately to minimize the effect of noise from main circuit wiring.

Analog input terminals

Table 2.2-9 Description of control circuit terminal functions

Classification	Terminal symbol	Terminal command	Function description
Analog input	[13]	Power supply for variable resistor	The terminal is used for the power supply (+10 VDC) for the external frequency setter (variable resistor: 1 to 5 kΩ). Connect variable resistors larger than 1/2 W.
	[12]	Analog setting voltage input	(1) Frequency is set up according to the external analog voltage input command value. · 0 to ±10 VDC/0 to ±100(%) (normal operation), · +10 to 0 VDC/0 to 100(%) (inverse operation) (2) Other than frequency settings, this terminal can be assigned to PID commands, PID control feedback signals, frequency auxiliary settings, ratio settings, torque limit value settings, torque command values *1, *2/torque current command values *1, *2, speed limit values, and analog input monitors with analog input. (3) Hardware specifications * Input impedance: 22 (kΩ) * Up to ±15 VDC can be input. However, input exceeding ±10 VDC will be recognized as ±10 VDC. * To input bipolar (0 to ±10 VDC) analog setting voltage at terminal [12], set function code C35 to “0”.

*1 These are valid specifications and functions when performing speed sensorless vector control.

*2 These are valid specifications and functions when performing vector control with speed sensor. A PG interface card (option) is required.

Table 2.2-9 Description of control circuit terminal functions (cont.)

Classification	Terminal symbol	Terminal command	Function description
Analog input	[C1]	Analog setting current input (C1 function)	(1) Frequency is set up according to the external analog current input command value. · 4 to 20 mA DC/0 to 100(%), 0 to 20 mA DC/0 to 100(%) (normal operation) · 20 to 4 mA DC/0 to 100(%), 20 to 0 mA DC/0 to 100(%) (inverse operation) (2) Other than frequency settings, this terminal can be assigned to PID commands, PID control feedback signals, frequency auxiliary settings, ratio settings, torque limit value settings, torque command values *1, *2/torque current command values *1, *2, speed limit values, and analog input monitors with analog input. (3) Hardware specifications * Input impedance: 250 (Ω) * Up to 30 mA DC can be input. However, input exceeding 20 mA DC will be recognized as 20 mA DC.
		Analog setting voltage input (V3 function)	(1) Frequency is set up according to the external analog voltage input command value. · 0 to ±10 VDC/0 to ±100(%) (normal operation) · 10 to ±0 VDC/0 to ±100(%) (inverse operation) (2) Other than frequency settings, this terminal can be assigned to PID commands, PID control feedback signals, frequency auxiliary settings, ratio settings, torque limit value settings, torque command values *1, *2/torque current command values *1, *2, speed limit values, and analog input monitors with analog input. (3) Hardware specifications * Input impedance: 22 (kΩ) * Up to ±15 VDC can be input. However, input exceeding ±10 VDC will be recognized as ±10 VDC. * To input bipolar (0 to ±10 VDC) analog setting voltage at terminal [V3], set function code C78 to “0”.
	[V2]	Analog setting voltage input (V2 function)	(1) Frequency is set up according to the external analog voltage input command value. · 0 to ±10 VDC/0 to ±100(%) (normal operation) · 10 to ±0 VDC/0 to ±100(%) (inverse operation) (2) Other than frequency settings, this terminal can be assigned to PID commands, PID control feedback signals, frequency auxiliary settings, ratio settings, torque limit value settings, torque command values *1, *2/torque current command values *1, *2, speed limit values, and analog input monitors with analog input. (3) Hardware specifications * Input impedance: 22 (kΩ) * Up to ±15 VDC can be input. However, input exceeding ±10 VDC will be recognized as ±10 VDC. * To input bipolar (0 to ±10 VDC) analog setting voltage at terminal [V2], set function code C45 to “0”.

*1 These are valid specifications and functions when performing speed sensorless vector control.

*2 These are valid specifications and functions when performing vector control with speed sensor. A PG interface card (option) is required.

Table 2.2-9 Description of control circuit terminal functions (cont.)

Classification	Terminal symbol	Terminal command	Function description
Analog input	[V2]	PTC/NTC thermistor input (PTC/NTC function)	(1) PTC (Positive Temperature Coefficient)/NTC (Negative Temperature Coefficient) thermistors for motor protection can be connected. SW5 (see “2.2.7 Switching switches”) on the PCB must be switched to the PTC/NTC side. The following diagram shows the internal circuit when SW5 (terminal [V2] changeover switch) is switched to the PTC/NTC side. Refer to “2.2.7 Switching switches” for details on SW5. When SW5 is switched to the PTC/NTC side, function code H26 also needs to be changed. 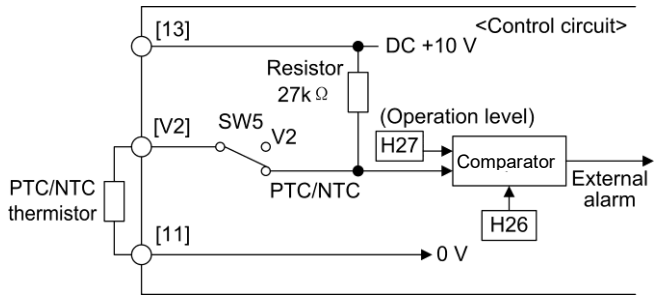 Fig. 2.2-14 Internal circuit when SW5 is switched to PTC/NTC side
	[11]	Analog common	The terminal is the common terminal for analog input signals (terminals [13], [12], [C1], [V2], [FM1], and [FM2]). The terminal is insulated from terminals [CM], [CMY].

Note

- Use shielded wire and keep the wiring to the minimum as possible (below 20 meters) for control signals which are susceptible to external noise. Grounding the shielded wire is generally recommended, but if external induction noise is large, connecting to terminal [11] may reduce the noise. As shown in Fig. 2.2-15 below, shielded wire increases the shielding effect, and therefore one end must be grounded.
- When inserting a relay contact at analog input signal lines, use the twin contacts relay for small signals. Also, do not insert a relay to terminal [11].
- When external analog signal generators are connected, the analog signal generator circuit may malfunction due to the noise created by the inverter. In these cases, connect ferrite core (toroidal shape or equivalent) to the output terminals of the analog signal generator or connect high frequency capacitors between the control signal lines, as shown in Fig. 2.2-16 below.
- Do not apply a voltage of +7.5 VDC or higher to terminal [C1]. Failure to observe this could result in internal circuit damage.

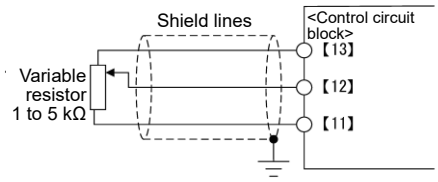

Fig. 2.2-15 Connection diagram for shielded wire

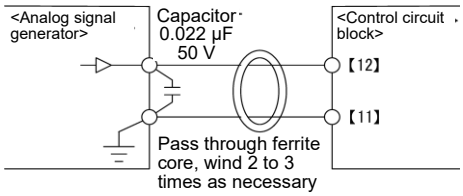

Fig. 2.2-16 Example of noise countermeasures

Digital input terminals

Table 2.2-10 Description of control circuit terminal functions

Classification	Terminal symbol	Terminal command	Function description
Digital input	[X1]	Digital input 1	(1) Various signals (coast to stop command, external alarm, multi-speed selection, etc.) can be set with function codes E01 to E09, E98, E99. Refer to Chapter 5 "FUNCTION CODES" for details. (2) The input mode and SINK/SOURCE can be switched using SW1. (See 2.2.7 Switching switches.) (3) The operating mode between each digital input terminal and terminal [CM] can be switched to "ON when shorted (active ON)" or "OFF when shorted (active OFF)". (4) Digital input terminals [X6] and [X7] can be set up as a pulse train input terminal by changing the function code Maximum wire length: 20 m Maximum input pulse 30 kHz: When connected to open collector output pulse generator (A pull-up resistor and pull-down resistor are required. Refer to ■When inputting pulse train with terminals [X6] and [X7]. 100 kHz: When connected to complementary output pulse generator Refer to Chapter 5 "FUNCTION CODES" for details on function code settings. <Digital input circuit specifications> 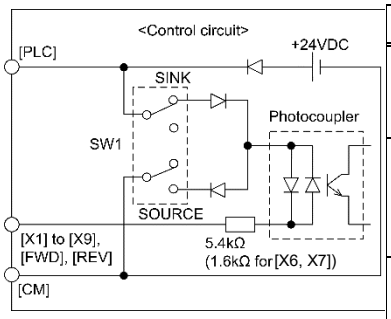 Fig. 2.2-17 Digital input circuit Table 2.2-11
	[X2]	Digital input 2	
	[X3]	Digital input 3	
	[X4]	Digital input 4	
	[X5]	Digital input 5	
	[X6]	Digital input 6	
	[X7]	Digital input 7	
	[X8]	Digital input 8	
	[X9]	Digital input 9	
	[FWD]	Forward rotation run/stop command input	
	[REV]	Reverse rotation run/stop command input	
	[EN1] [EN2]	Enable input	(1) When terminals [EN1]-[PLC] or terminals [EN2]-[PLC] are OFF, the inverter output transistors stop switching (safe torque off: STO). Be sure to operate terminals [EN1] and [EN2] simultaneously; otherwise an ECF alarm is issued and the operation of the inverter will be disabled. (2) The input mode for terminals [EN1] and [EN2] is fixed to source. The mode cannot be switched to sink. (3) This function can be enabled and disabled with SW7. If using this function, set the respective SW7 switches to the OFF side. <Terminal [EN1], [EN2] circuit specifications> 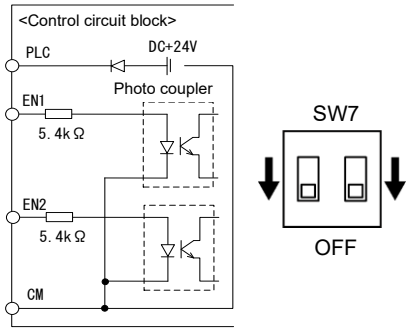

Item		Min.	Max.
Operating voltage (SINK)	ON level	0 V	2 V
	OFF level	20 V	27 V
Operating voltage (SOURCE)	ON level	20 V	27 V
	OFF level	0 V	2 V
Operating current when ON (when input voltage 0 V) (for [X6] [X7] input terminal)		2.5 mA (3 mA)	5 mA (16 mA)
Permissible leakage current when OFF		-	0.5 mA

Item		Min.	Max.
Operating voltage (SOURCE)	ON level	20 V	27 V
	OFF level	0 V	2 V
Operating current when ON (when input voltage 27 V)		2.5 mA	10 mA
Permissible leakage current when OFF		–	0.5 mA

Digital input	[PLC]	Programmable controller signal power supply	(1) Connect the output signal power supply for the programmable controller. (Rated voltage +24 VDC (power supply voltage fluctuation range: 20.4 to +27 VDC), maximum 100 mA) (2) The terminal can also be used as the power supply for loads connected to transistor outputs. Refer to the "Transistor output" section for details.

Table 2.2-10 Description of control circuit terminal functions (cont.)

Classification	Terminal symbol	Terminal command	Function description
Digital input	[CM]	Digital common	This is a common terminal for digital input signals. The terminal is insulated from terminals [11], [CMY].

Tip

■ **When turning terminals [X1] to [X9], [FWD], [REV] ON/OFF using relay contacts**

An example of a circuit configuration using relay contacts is shown in Fig. 2.2-18. Circuit (a) in the diagram shows the circuit configuration when the switch is at the SINK side, and circuit (b) shows the circuit configuration when the switch is at the SOURCE side.

Caution: Use relay contacts which do not have contact failures (high contact reliability).
(Recommended product: Fuji Electric control relay, model: HH54PW)

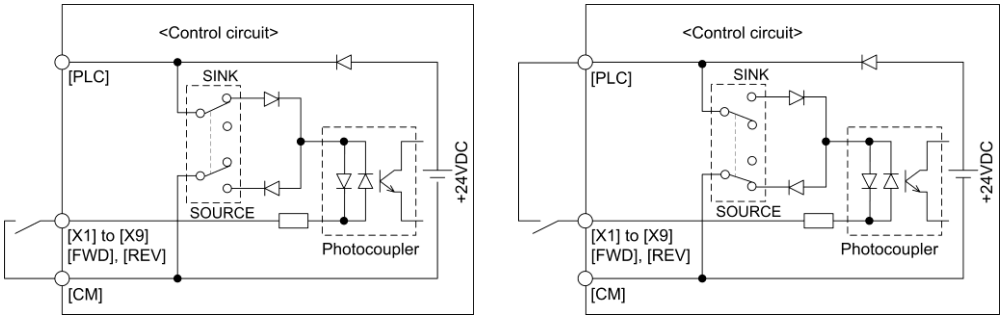

(a) If switch at SINK side (b) If switch at SOURCE side

Fig. 2.2-18 Example of circuit configuration using relay contacts

Tip

■ **When turning terminals [X1] to [X9], [FWD], [REV] ON/OFF using a programmable controller**

An example of a circuit configuration using a programmable controller is shown in Fig. 2.2-19. Circuit (a) in the diagram shows the circuit configuration when the switch (SW1) is at the SINK side, and circuit (b) shows the circuit configuration when the switch is at the SOURCE side.

In circuit (a), terminals [X1] to [X9], [FWD], and [REV] can be turned ON/OFF by shorting/opening the open collector transistor output of the programmable controller using an external power supply. Follow the instructions below when using this type of circuit.

· Connect the + side of an external power supply insulated from the programmable controller power supply to the [PLC] terminal.

· Do not connect the inverter [CM] terminal and the common terminal of the programmable controller.

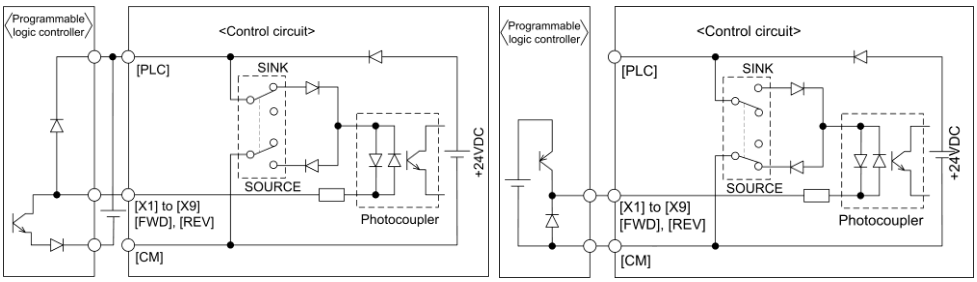

(a) If switch at SINK side (b) If switch at SOURCE side

Fig. 2.2-19 Example of circuit configuration using programmable controller

📖 Refer to “2.2.7 Switching switches" for details on switches.

Note

■ **When inputting pulse train with terminals [X6] and [X7]**

If connecting to an open collector output pulse generator, it may not be possible to correctly recognize input pulses due to the stray capacitance of the wiring. In response to this, if the changeover switch is set to the SINK side, connect a pull-up resistor between the open collector output signals (terminals [X6], [X7]) and the power supply (terminal [PLC]), and if the changeover switch is set to the SOURCE side, connect a pull-down resistor between the open collector output signals (terminals [X6], [X7]) and the digital common (terminal [CM]). 1 kΩ, 2 W pull-up and pull-down resistors are recommended. The stray capacitance of wiring varies greatly depending on such factors as the wire type and method in which wiring is laid. It is therefore necessary to check whether it is possible to recognize pulse train input correctly.

Analog output, pulse output, transistor output, contact output terminals

Table 2.2-12 Description of control circuit terminal functions

Classification	Terminal symbol	Terminal command	Function description
Analog output	[FM1] [FM2]	Analog monitor (FMA function)	These terminals output analog DC voltage of 0 to ±10 VDC, and analog DC current of 4 to 20 mA DC or 0 to 20 mA DC monitor signals. The [FM1] output form (VO1/IO1) can be switched using SW4 on the PCB and function code F29. The signal content is selected from the following by setting function code F31 data. The [FM2] output form (VO2/IO2) can be switched using SW6 on the PCB and function code F32. The signal content is selected from the following by setting function code F61 data. • Output frequency • Output current • Output voltage • Output torque • Load factor • Power consumption • PID feedback value • Speed (PG feedback value) • DC intermediate circuit voltage • Universal AO • Motor output • Analog output test • PID command value • PID output • Position error in master-follower operation * Allowable impedance for connection: Min. 5 kΩ (with output of 0 to ±10 VDC) (up to two analog voltmeters (0 to 10 VDC, input impedance 10 kΩ) can be connected.) * Allowable impedance for connection: Max. 500 Ω (with output of 4 to 20 mA DC) * Gain adjustable range: 0 to 300%
	[11]	Analog common	This is a common terminal for analog input/output signals. The terminal is insulated from terminals [CM], [CMY].
Pulse output	[FMP]	Pulse monitor (FMP function)	This terminal outputs a pulse signal. The signal content is selected in the same way as that as for the FM1/2 function by setting function code F35 data. * Allowable impedance for connection: Min. 5 kΩ (up to two analog voltmeters (0 to 10 VDC, input impedance 10 kΩ) can be connected.) (Set F34 to between 1 and 300% if using as average voltage output.) * Pulse duty: Approx. 50%, pulse rate: 25 to 6000 p/s (at full scale) <Voltage waveform specification> • Pulse output waveform: 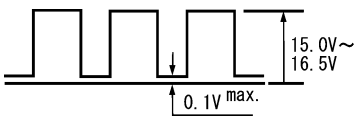 Fig. 2.2-20 • FMP output circuit: 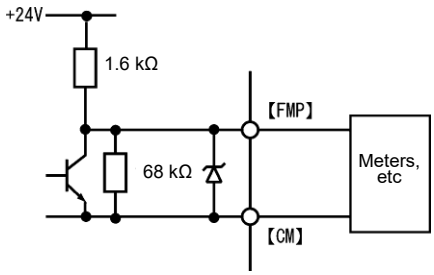 Fig. 2.2-21
	[CM]	Digital common	This is a common terminal for digital input signals and terminal [FMP]. The terminal is insulated from terminals [11], [CMY]. This is the same terminal as terminal [CM] for digital input.

Table 2.2-12 Description of control circuit terminal functions (cont.)

Classification	Terminal symbol	Terminal command	Function description
Transistor output	[Y1]	Transistor output 1	(1) Various signals (running signal, frequency reached signal, overload forecast signal, etc.) set up by function code E20 to E23 can be output. Refer to "Chapter 5 FUNCTION CODES" for details. (2) The operating mode between transistor output terminals [Y1] to [Y4] and terminal [CMY] can be switched to "ON when signal output (active ON)" or "OFF when signal output (active OFF)". <Transistor output circuit specifications> 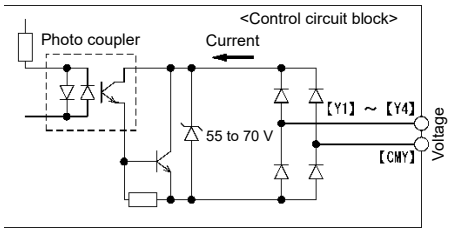 Fig. 2.2-22 Transistor output circuit Table 2.2-13 Item: Operating voltage – ON level: 2 V; Operating voltage – OFF level: 48 V; Max. load current when ON: 50 mA; Leakage current when OFF: 0.1 mA An example of a circuit configuration connected to a programmable controller is shown in Fig. 2.2-23. Note • Connect a surge absorbing diode to both ends of the excitation coil when connecting control relays. • If a power supply is required for the circuit to be connected, terminal PLC can be used as the power supply terminal. In this case, terminal [CMY] must be shorted to terminal [CM].
	[Y2]	Transistor output 2	
	[Y3]	Transistor output 3	
	[Y4]	Transistor output 4	
	[CMY]	Transistor output common	This is a common terminal for transistor output signals. The terminal is insulated from terminals [CM], [11].

Table 2.2-12 Description of control circuit terminal functions (cont.)

Classification	Terminal symbol	Terminal command	Function description
Transistor output			Tip ■ **If connecting a programmable controller to terminals [Y1] to [Y4]** An example of a circuit configuration in which inverter transistor output is connected to a programmable controller is shown in Fig. 2.2-23 below. Circuit (a) in shows the programmable controller input circuit as the sink input, and circuit (b) shows it as the source input. 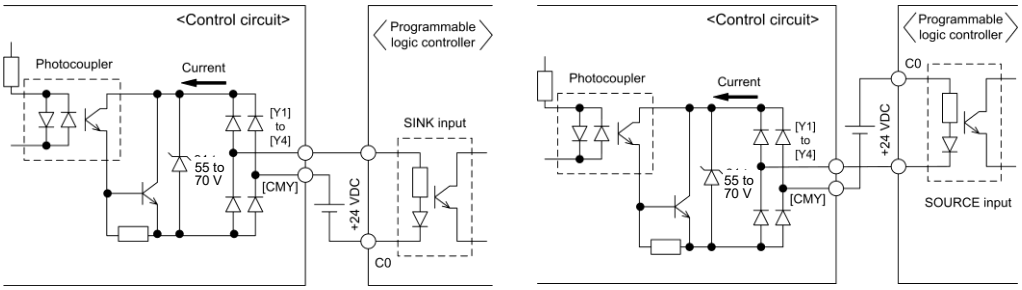 (a) Connection drawing of connection with sink input type programmable controller (b) Connection drawing of connection with source input type programmable controller Fig. 2.2-23 Example of circuit configuration for connection with programmable controller
Contact output	[Y5A] [Y5C]	General-purpose relay output	(1) The same signals as those of terminals [Y1] to [Y4] can be selected and output as multi-purpose relay outputs with function code E24. Contact capacity: 250 VAC 0.3 A cosφ = 0.3, 48 VDC 0.5 A (2) It is possible to switch between a "short circuit between terminals [Y5A] to [Y5C] when an ON signal is output (excitation: active ON)" or an "open circuit between terminals [Y5A] and [Y5C] when an ON signal is output (non-excitation: active OFF)".
	[30A] [30B] [30C]	Integrated alarm output	(1) When the inverter stops with an alarm, an integrated alarm is output at the relay contact (1C). Contact capacity: 250 VAC 0.3 A cosφ = 0.3, 48 VDC 0.5 A (2) The same signals as those of terminals [Y1] to [Y4] can be selected and output as multi-purpose relay outputs with function code E27. (3) It is possible to switch between a "short circuit between terminals [30A] and [30C] when an ON signal is output (excitation: active ON)" or an "open circuit between terminals [30A] and [30C] when an ON signal is output (non-excitation: active OFF)".
Communication	[DX+] [DX-] [SD]	Via RS-485 communications link port 2	This is an input/output terminal used to connect a computer or programmable controller, etc. by RS-485 communication. (Refer to "2.2.7 Switching switches" for details on terminating resistance). With a multi-drop (cross-wire) connection, use the recommended rod terminal. (Refer to "2.2.6 [1] Screw specifications and recommended wire size (control circuit terminals)" for details on recommended rod terminals).

RS-485 communication connector

Table 2.2-14 Description of control circuit terminal functions

Classification	Terminal symbol	Terminal command	Function description
Communication	RJ-45 connector for keypad connection	RS-485 communication port 1 (for keypad connection)	(1) This is used as a connector for connecting the keypad. The keypad power is supplied from the inverter via an extension cable for remote operation. If using an extension cable, turn ON the SW3 terminating resistor. (2) This is used to connect a computer or programmable controller, etc. by RS-485 communication after disconnecting the keypad. (Refer to "2.2.7 Switching switches" for details on terminating resistance). 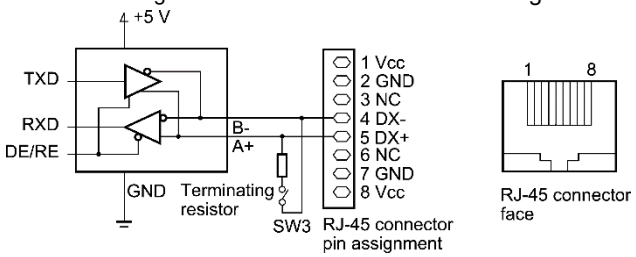 Fig. 2.2-24 RJ-45 connector pin arrangement • Pins 1, 2, 7, and 8 are assigned as the power supply source for the keypad. When connecting this RJ-45 connector to other devices, do not use these pins.
	USB connector	USB port (keypad)	This is a USB connector (miniB specification) for connecting to a computer. Function codes can be edited, transferred, and verified, an inverter test run can be performed, and all states can be monitored using the inverter support loader (FRENIC Loader)*. * Refer to Chapter 9 “9.2 FRENIC Loader Overview” for details.

Note

- The control circuit terminal lines should be routed as far as possible from the main circuit routing. Malfunction may occur due to noise.
- To prevent direct contact with the main circuit live sections (such as the main circuit terminal block), route the control circuit wiring inside the inverter as bundles using cable ties.

2.2.7 Switching switches

⚠WARNING⚠

Switch all switches after first waiting for at least 5 minutes for FRN0003 to 0115G2S-2G / FRN0002 to 0060G2 □-4G, or 10 minutes for FRN0146 to 0432G2S-2G / FRN0085 to 1480G2□-4G after turning off the power, ensuring that the LED monitor and charge lamp are off, and using a device such as a tester to ensure that the DC intermediate circuit voltage across main circuit terminals [P(+)] – [N(-)] has dropped to a safe level (+25 VDC or less).

Failure to observe this could result in electric shock.

The I/O terminal specification can be changed, such as switching the analog output form, by operating the slide switches on the printed circuit board (see Fig. 2.2-25 Switch positions).

To change all slide switches remove the front cover to expose the control PCB.
(With FRN0146 to 0432G2S-2G / FRN0085 to 1480G2□-4G, open the keypad case also.)

📖 Refer to Chapter 2 “2.2.2 Removal and attachment of the front cover and wiring guide” for details on how to remove the front cover, and to open/close the keypad case.

A functional description of the slide switches is given in “Table 2.2-15” below.

Table 2.2-15 Functional description of slide switches

Switch symbol	Function description
SW1	<Switch to change sink/source setting of digital input terminals> • This switch determines the type of input (sink or source) to use for digital input terminals [X1] to [X9], [FWD], and [REV]. • The switch is set to the SINK side by factory default *1. Unless there is no particular mention of it in this manual, this description will be based on the premise that the switch is set to the SINK side. *1 The factory default setting for SW1 of FRN****G2E-4G is “SOURCE”
SW2	<Terminating resistor changeover switch for RS-485 communication (RS-485 communication port 2 (on terminal board))> • Move the switch to the ON side when RS-485 communication is used and the inverter is located at either end of the communication network.
SW3	<Terminating resistor changeover switch for RS-485 communication (RS-485 communication port 1 (for keypad connection))> · Move the switch to the ON side when RS-485 communication is used and the inverter is located at either end of the communication network.
SW4	<Terminal [FM1] voltage/current output changeover switch> This switch changes the output type for terminal [FM1]. When operating this switch, also change function code F29. Table 2.2-16

Output type	SW4	F29 data
Voltage output	VO1 side	0
Current output	IO1 side	1 (4 to 20 mA) 2 (0 to 20 mA)

SW5

<Terminal [V2] function changeover switch>

The switch can be set to either analog setting voltage input or PTC/NTC thermistor input as the terminal [V2] function. When operating this switch, also change function code H26.

Table 2.2-17

Input type	SW5	H26 data
Analog setting voltage input	V2 side	0
PTC/NTC thermistor input	PTC/NTC side	1 or 2 or 3

SW6

<Terminal [FM2] voltage/current output changeover switch>

This switch changes the output type for terminal [FM2]. When operating this switch, also change function code F32.

Table 2.2-18

Output type	SW6	F32 data
Voltage output	VO2 side	0
Current output	IO2 side	1 (4 to 20 mA) 2 (0 to 20 mA)

SW7 (2-pole)

<Functional safety input terminal [EN1], [EN2] enable/disable changeover switch>

This switch is used to enable or disable terminals [EN1] and [EN2]. If using functional safety input terminals [EN1] and [EN2], be sure to set this switch to the OFF side for both the left and right sides

Table 2.2-19

Input type	SW7	
	[EN1] (Left side)	[EN2] (Right side)
Terminal [EN1] / [EN2] input disable	ON side	ON side
Terminal [EN1] / [EN2] input enable	OFF side	OFF side

SW8

<Terminal [C1] current/voltage input changeover switch>

The switch can be set to either analog setting current input or analog setting voltage input as the terminal [C1] function.

Table 2.2-20

Input type	SW8
Analog setting current input	C1 side
Analog setting voltage input	V3 side

The switch locations on the control PCB are shown below.

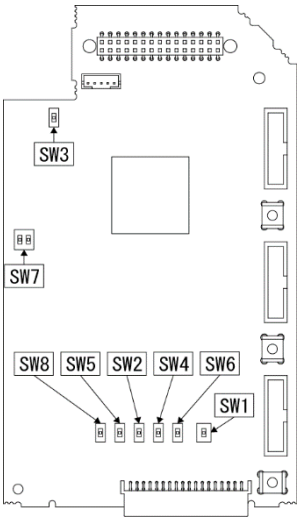

Fig. 2.2-25 Switch positions

Table 2.2-21 Switch changeover and factory default settings

	SW1	SW2	SW3	SW4	SW5	SW6	SW7	SW8
Variable range	SINK	OFF	OFF	VO1	V2	VO2	ON	C1
	SOURCE	ON	ON	IO1	PTC/NTC	IO2	OFF	V3
Factory default	SINK *1	OFF	OFF	VO1	V2	VO2	ON	C1

*1 The factory default setting for SW1 of FRN****G2E-4G is “SOURCE”.

Note To change the switch settings, use a tool with fine tip (tweezers, etc.), and be careful not to touch any other electronic components. The switch will be at open state when the slider is in the middle, so be sure to push it fully in to the end.

2.3 Mounting and Removing the Keypad

The keypad can be removed from the inverter unit, and installed on the panel, or used for remote manual operation.

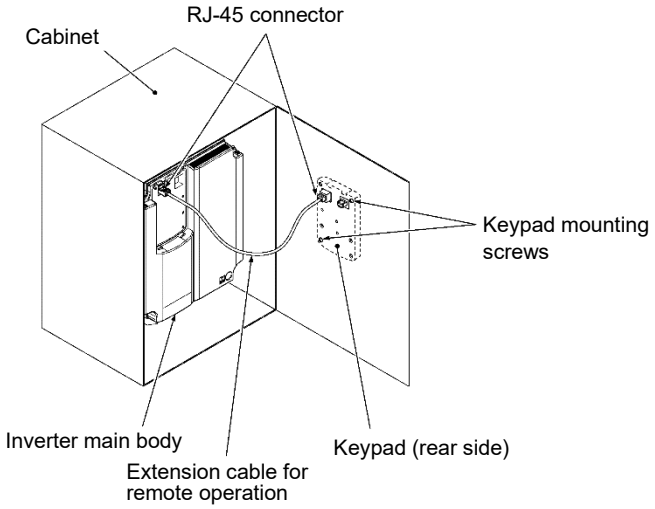

Fig. 2.3-1 If installing the keypad on the panel

The following parts are necessary if mounting the keypad on locations other than the inverter unit.

Table 2.3-1

Part name	Type	Remarks
Extension cable for remote operation (Note 1)	CB-5S, CB-3S, CB-1S	Three lengths available (1 m, 3 m, 5 m) (3.3 ft, 9.8 ft, 16.4 ft)
Keypad mounting screws	M3x□ (Note 2)	2 screws required (prepared by user)

(Note 1) When using a commercially available LAN cable, use a 10BASE-T/100BASE-TX straight cable (within 20 meters (65 ft)) which meets the ANSI/TIA/EIA-568A category 5 or higher standards of the US.

(Note 2) When attaching to the cabinet, use a fixing screw of appropriate length to the cabinet thickness. (The keypad screw hole depth is 11 mm (0.43 in).)

■ Removing and mounting the keypad

Pull the keypad toward you to remove while pressing down on the hook indicated by the arrow. Use the opposite procedure to mount the keypad.

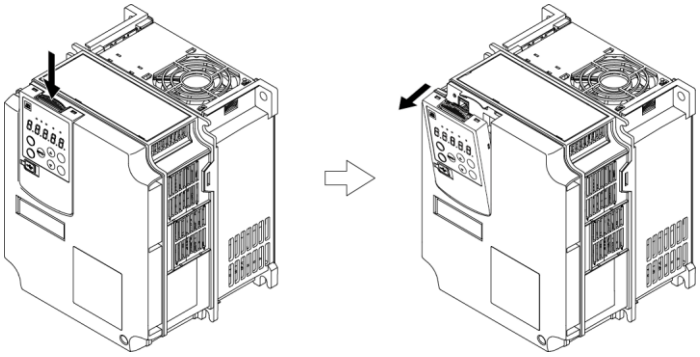

Fig. 2.3-2 Keypad removal

Chapter 3
OPERATION USING THE KEYPAD

This chapter describes inverter keypad operation.

A keypad (TP-E2) and Multi-function keypad (TP-A2SW) are available, and this manual provides explanations using the keypad. For details on the Multi-function keypad (TP-A2SW), refer to the instruction manual (INR-SI47-2422□-E).

Contents

3.1 Name and Function of Each Keypad Part ····· 3-1
3.1.1 Keypad (TP-E2) ····· 3-1
3.1.2 Multi-function keypad (TP-A2SW) ····· 3-3
3.2 Overview of Operation Modes ····· 3-7
3.2.1 Keypad (TP-E2) ····· 3-7
3.2.2 Multi-function keypad (TP-A2SW) ····· 3-8
3.3 Running Mode ····· 3-9
3.3.1 Operating state monitor ····· 3-9
3.3.2 Status display ····· 3-12
3.3.3 Monitoring warnings ····· 3-13
3.3.4 Running or stopping the motor with the keypad ····· 3-14
3.3.5 Setting the reference frequency with the keypad ····· 3-14
3.3.6 Setting PID commands with the keypad ····· 3-15
[1] Settings under PID process control ····· 3-15
[2] Settings under PID dancer control ····· 3-17
3.3.7 Jogging operation ····· 3-19
3.3.8 Switching between local and remote modes ····· 3-20
3.3.9 Changing the M/Shift key function ····· 3-21
3.3.10 Display when keypad operation disabled (command source display) ····· 3-21
3.4 Programming Mode ····· 3-22
3.4.1 Setting function codes “Data Setting: 1.F__ to 1.P__” ····· 3-23
3.4.2 Checking changed function codes “Data Checking: 2.rEP” ····· 3-25
3.4.3 Monitoring the running status “Drive Monitoring: 3.oPE” ····· 3-26
3.4.4 Checking I/O signal status “I/O Checking: 4.I_o” ····· 3-32
3.4.5 Reading maintenance information “Maintenance Information: 5.CHE” ····· 3-38
3.4.6 Reading alarm information “Alarm Information: 6.AL” ····· 3-45
3.4.7 Copying data “Data Copying: 7.CPY” ····· 3-49
3.4.8 Checking the status of communication with the host device “Communication monitor: 9.S_ to 9.dAtA” ····· 3-53
3.4.9 Setting “Favorites” function code data “Favorites: 0.FnC” ····· 3-54

3.5 Alarm Mode ····· 3-55
3.5.1 Releasing the alarm and switching to running mode ····· 3-55
3.5.2 Displaying the alarm history ····· 3-55
3.5.3 Displaying the status of inverter at the time of alarm ····· 3-55
3.5.4 Switching to programming mode ····· 3-55
3.6 USB Port ····· 3-56

3.1 Name and Function of Each Keypad Part

3.1.1 Keypad (TP-E2)

The keypad allows you to run and stop the inverter, display various data, configure function code data, monitor I/O signal states, and display maintenance information and alarm information.

Note If using the Multi-function keypad (TP-A2SW), refer to “3.1.2 Multi-function keypad (TP-A2SW).”

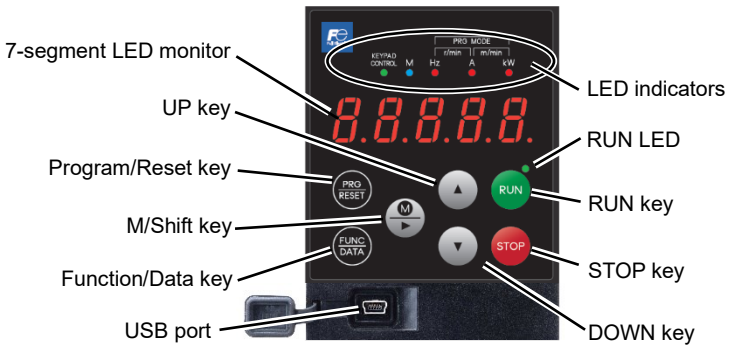

Fig. 3.1-1 Keypad external appearance and name of each part

Table 3.1-1 Names of each keypad part and overview of functions

Item	Display and keys	Function overview
LED monitor	8.8.8.8.8.	Five-digit, 7-segment LED monitor which displays the following content based on the operation mode. ■ In Running mode: Running status information (e.g., output frequency, current, and voltage) Changes to the status display (see Chapter 3.3.2) when not in the normal running status. Changes to the warning display (see Chapter 3.3.3) when a warning occurs. ■ In Programming mode: Menus, function codes and their data ■ In Alarm mode: Alarm code, which identifies the alarm factor that has activated the protective function.
Operation keys	PRG RESET	Program/Reset key which switches the operation modes of the inverter. ■ In Running mode: Pressing this key switches the inverter to Programming mode. ■ In Programming mode: Pressing this key switches the inverter to Running mode. ■ In Alarm mode: Pressing this key after removing the alarm factor resets the alarm and switches back to Running mode.
	FUNC DATA	Function/Data key which switches the operations you want to do in each mode as follows: ■ In Running mode: Pressing this key switches the information to be displayed concerning the status of the inverter (output frequency (Hz), output current (A), output voltage (V), etc.) (Holding down the key brings back the initial display.) ■ In Programming mode: Pressing this key displays the function code or establishes data. ■ In Alarm mode: Pressing this key displays the details of the problem indicated by the alarm code that has come up on the LED monitor.
	RUN	Press to run the motor (when performing keypad operation).
	STOP	Press to stop the motor (when performing keypad operation).
	▲/▼	Press these keys to select the setting items and change the function code data displayed on the LED monitor.
	M/▶	■ In Running mode: Functions assigned with function code E70 can be used. Hold down (for 1 second) to turn the function ON and OFF. The function is always OFF when the power is turned ON. Refer to “3.3.8 Switching between local and remote modes” for details. ■ In Programming mode While menu displayed: Jumps to the next menu number. While function code displayed: Jumps to the displayed number +10. While setting numerical values: Moves the cursor digit to the right. ■ In Alarm mode: The alarm detailed information number shifts +10.

Item	Display and keys	Function overview
LED indicators	RUN (green)	Lights when running with a run command entered by the (RUN) key, by terminal command "FWD" or "REV", or through the communications link.
	KEYPAD CONTROL (green)	Lights up when the keypad (RUN) key is valid as a run command. In Alarm modes, however, pressing this key cannot run the inverter even if this indicator lights. The LED blinks every second while in local mode.
	M (blue)	Indicates the signal selected with function code E71. Refer to Chapter 5 "5.3.2 E codes (Extension terminal functions)" for details.
	Unit LEDs (3 red LEDs)	Unit: Hz, A, kW, r/min and m/min These three LED indicators identify the unit of numeral displayed on the LED monitor in Running mode by combination of lit and unlit states of them. Refer to "3.3.1 Operating state monitor" for details.
		While the inverter is in Programming mode, ●Hz the LEDs of Hz and kW light. ○A After changing to Programming mode, the 2 LEDs on the left and right light up. (●Hz ○A ●kW)
USB port		The inverter and PC can be connected with a USB cable. The connector shape at the inverter side is a miniB type.

■ **LED monitor**

In Running mode, the LED monitor displays running status information (output frequency, current or voltage); in Programming mode, it displays menus, function codes and their data; and in Alarm mode, it displays an alarm code which identifies the alarm factor that has activated the protective function.

If one of LED5 through LED1 is blinking, it means that the cursor is at this digit, allowing you to change it.

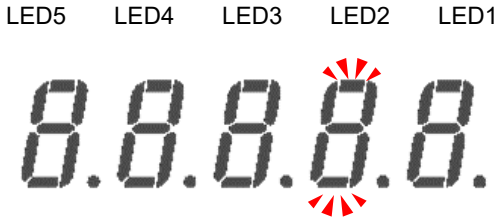

Fig. 3.1-2 7-segment LED monitor (LED2 is blinking)

Table 3.1-2 7-segment LED monitor display

Character	7-segment	Character	7-segment	Character	7-segment	Character	7-segment
0	0	9	9	I *	i or ı	R	r
1	1	A	A	J	J	S	S
2	2	B	b	K	K	T *	t or t
3	3	C *	C or c	L	L	U *	U or u
4	4	D	d	M	M	V *	U or u
5	5	E	E	N	n	W	W
6	6	F	F	O *	O or o	X	X
7	7	G *	G or g	P	P	Y	Y
8	8	H *	H or h	Q	q	Z	Z
Special characters and symbols (numbers with decimal point, minus and underscore)							
0. to 9.	0. to 9.	-	-	_	_	~	-
		[	[	]	]	%	%
		:	c	;	;	^	^

*: Upper case and lower case characters are used based on the displayed content.

3.1.2 Multi-function keypad (TP-A2SW)

The Multi-function keypad allows you to run and stop the motor, monitor the running status, specify the function code data, and monitor I/O signal states, maintenance information, and alarm information.

Fig. 3.1-3 Names and functions of keypad components

1.	**LED indicators:** These indicators show the current running status of the inverter.	Refer to Table 3.1-3.
2.	**LCD monitor:** This monitor shows the following various information about the inverter according to the operation modes.	Refer to Fig. 3.1-4 and Table 3.1-5.
3.	**Keys/USB port** These keys are used to perform various inverter operations.	Refer to Table 3.1-4.

Table 3.1-3 Indication of LED indicators

LED Indicators	Indication	
STATUS (Green)	Shows the inverter running state.	
	Flashing	No run command input (Inverter stopped)
	ON	Run command input
WARN (Yellow)	Shows the warning state.	
	OFF	No warning has occurred.
	Flashing /ON	A warning has occurred.
ALARM (Red)	Shows the alarm state (alarm).	
	OFF	No alarm has occurred.
	Flashing	A alarm has occurred.

Table 3.1-4 Overview of keypad/USB port functions

Item	Display and keys	Function overview
Program key	PRG	This key switches the operation modes between Running mode/Alarm mode and Programming mode.
RESET key	RESET	Reset key which works as follows according to the operation modes. ■ In Running mode: This key cancels the screen transition. ■ In Programming mode: This key resets the alarm states and switches to Programming mode. ■ In Alarm mode: This key discards the settings being configured and cancels the screen transition.
UP/DOWN/ LEFT/RIGHT arrow key	▲/▼	UP/DOWN key which works as follows according to the operation modes. ■ In Running mode: These keys switch to the digital reference frequency and PID command modification screen (when commands from the keypad are enabled). ■ In Programming mode: These keys display multiple alarms and alarm history. ■ In Alarm mode: These keys select menu items, change data, and scroll the screen.
	◄/►	These keys move the cursor to the digit of data to be modified, shift the setting item, and switch the screen.
SET key	SET	Set key which works as follows according to the operation modes. ■ In Running mode: Pressing this key switches to the selection screen of the main monitor content. ■ In Programming mode: Pressing this key switches to the alarm detailed information screen. ■ In Alarm mode: Pressing this key established the selected items and data being changed.
HELP key	HELP REM/LOC	Pressing this key calls up the HELP screen according to the current display state. Holding it down for 2 seconds toggles between the remote and local modes.
Run key (forward)	FWD	Pressing this key starts running the motor in the forward rotation (when a run command from the keypad is enabled).
Run key (reverse)	REV	Pressing this key starts running the motor in the reverse rotation (when a run command from the keypad is enabled).
STOP key	STOP	Pressing this key stops the motor (when a run command from the keypad is enabled or the STOP key priority is selected).
USB port	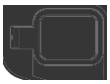	The inverter and computer can be connected with a USB cable. The connector type at the inverter side is a miniB type.

■ **LCD monitor**

The LCD monitor shows various information of the inverter according to the operation modes.

< Screen sample in Running mode >

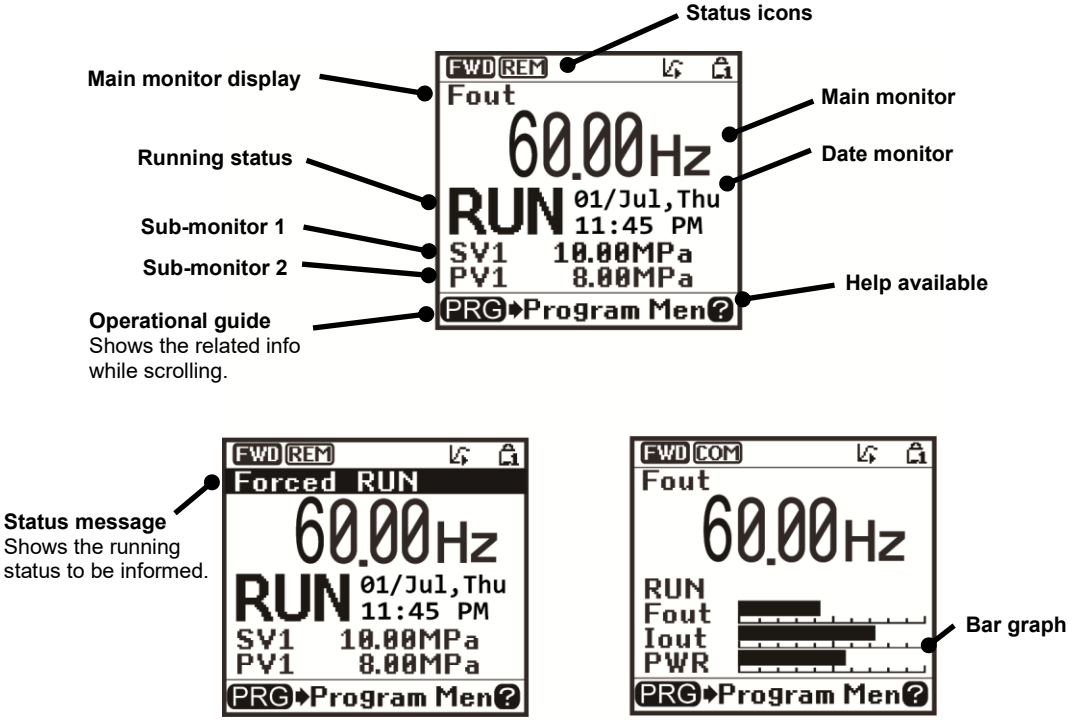

< Screen sample in Alarm mode >

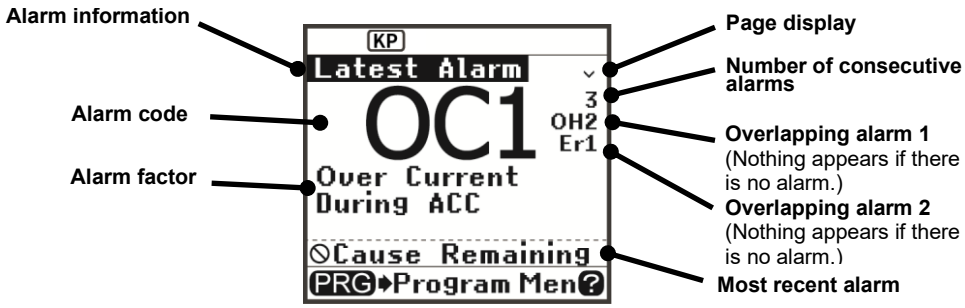

Fig. 3.1-4 Screen samples in running and alarm modes

Table 3.1-5 Indication of LCD indicators

Status icons that show the running status, run command sources and various icons			
	FWD	Running status (rotation direction)	Running forward
	REV		Running reverse
	EXT		During DC braking, pre-excitation, condensation prevention, etc. (during output with no speed)
	Hidden		Stopped
	KP	Run command source	Keypad
	REM		External terminals
	COM		Communications link
	LOC		Keypad in local mode
		Scheduled operation	Running based on scheduled operation judgment with scheduled operation setting enabled, and with run command
			• Stopped based on scheduled operation judgment with scheduled operation setting enabled, and with run command • While canceled (running, stopped) • Rest day (running, stopped)
			Stopped due to no run command with scheduled operation setting enabled, and clock normal (except while canceled)
			With scheduled operation setting, and clock information lost (operation prohibited) Terminals TM1 to TM4 all OFF (operation prohibited)
	Hidden		No scheduled operation setting
		PID operation (Internal PID)	Internal PID setting specified, PID1 selected (displayed even when run command OFF)
			Internal PID setting specified, PID2 selected (displayed even when run command OFF)
			PID operation stopped temporarily, e.g., due to slow flowrate (Run command being ON)
			PID operation canceled (including boost)
	Hidden		No PID operation
		Battery status (displayed after clock set)	Connected, sufficient remaining capacity
			Connected, voltage low
			Not connected, or no remaining capacity
	Hidden		Battery status monitoring disabled
		Password protection state	Inverter being locked (Force to stop, Inoperable)
			Locked with password 2 (Access to function codes is prohibited.)
			Locked with password 1 (Function code data change is prohibited.)
			Lock being released (Password being canceled)
	Hidden		No password set
Running status			
	STOP	Running status	No run command entered or inverter stopped
	RUN		Run command entered or during inverter output
HELP that displays help information corresponding to the current screen			
		(illuminated)	Help available
		(flashing)	Help being displayed

Tip LCDs have temperature characteristics. The low temperature slows down the LCD response; the high temperature makes the screen contrast high so that contrast adjustment may be needed.

Note Icons to be displayed differ depending upon the applied inverter and function code data settings.

3.2 Overview of Operation Modes

3.2.1 Keypad (TP-E2)

FRENIC-MEGA is equipped with the following three operation modes.

Table 3.2-1 Operation modes

Operation mode	Description
Running Mode	When powered ON, the inverter automatically enters this mode. This mode allows you to specify the reference frequency, PID command value and etc., and run/stop the motor with the (RUN)/(STOP) keys. The running status can also be monitored in real time. Changes to the status display (see 3.3.2) when not in the normal running status. Changes to the warning display (see 3.3.3) when a warning occurs.
Programming Mode	This mode allows you to configure function code data and check a variety of information relating to the inverter status and maintenance. * Operation continues even if switching to Programming mode by pressing the (PRG RESET) key during operation. Furthermore, the inverter can be run and stopped even while in Programming mode.
Alarm Mode	If an alarm condition arises, the inverter automatically enters Alarm mode in which you can view the corresponding alarm code* and its related information on the LED monitor. * Alarm code: Indicates the cause of the alarm condition. For details, first see “Table 6.1-1 Abnormal States Detectable (“Alarm” and “Warning” Objects)” in Chapter 6 “6.1 Protective Function” , and then read the troubleshooting information for each alarm.

Fig. 3.2-1 below shows the status transition of the inverter between these three operation modes.

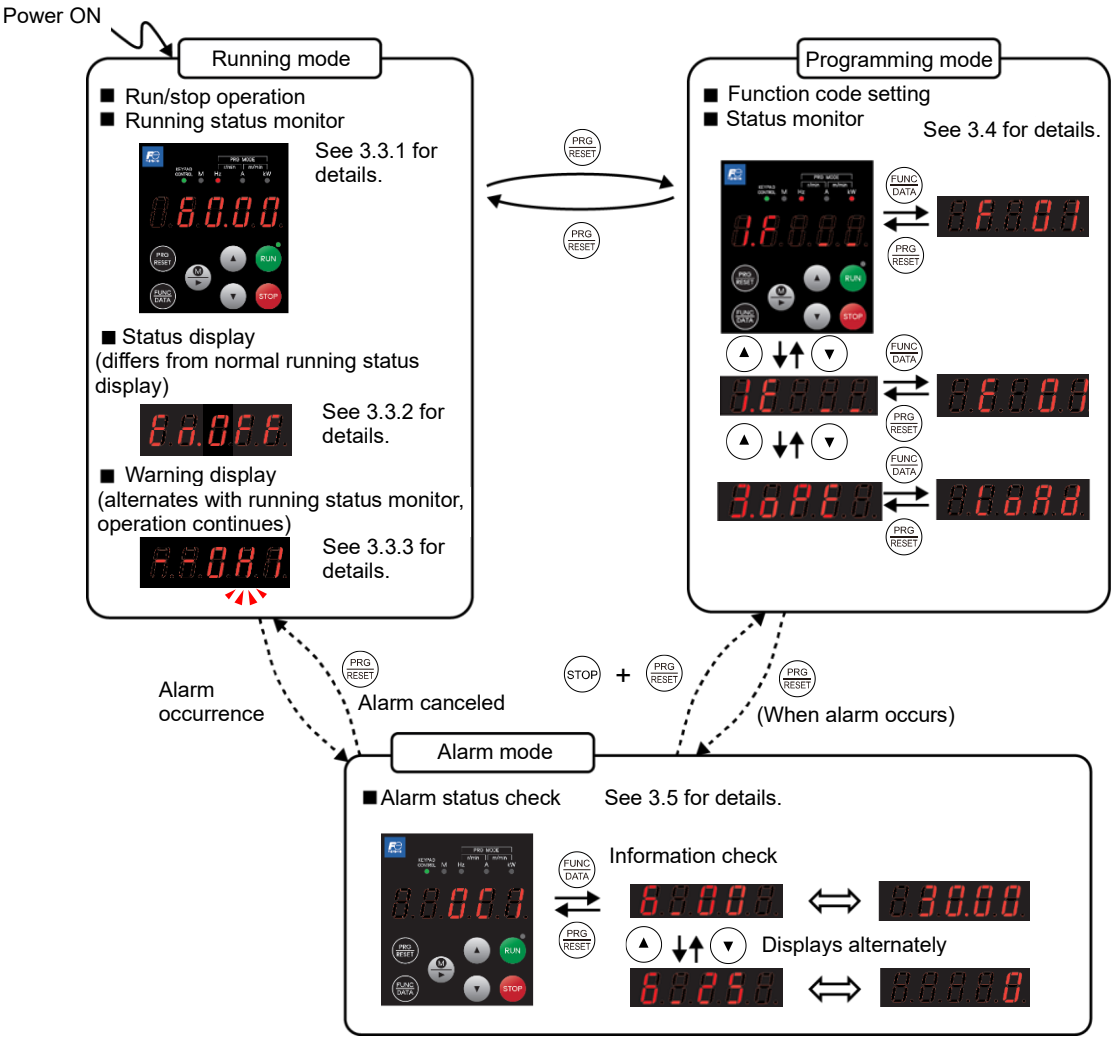

Fig. 3.2-1 Status transition between operation modes

Tip **Simultaneous keying**

Simultaneous keying means pressing two keys at the same time. The simultaneous keying operation is expressed by a “+” letter between the keys throughout this manual.

For example, the expression "(STOP) + (PRG/RESET) keys” stands for pressing the (PRG/RESET) key with the (STOP) key held down.

3.2.2 Multi-function keypad (TP-A2SW)

The Multi-function keypad features the following three operation modes:

■ Running mode: After powered ON, the inverter automatically enters this mode.

This mode allows you to specify the reference frequency, PID command value and etc., and run/stop the motor with the (FWD)/(REV)/(STOP) keys.

It is also possible to monitor the running status in real time.

■ Programming mode: This mode allows you to configure function code data*1 and check a variety of information*1 relating to the inverter status and maintenance.

(*1: The setting range and displayed content will differ depending on the connected inverter. Refer to the Instruction Manual and User's Manual of each model.)

■ Alarm mode: If an alarm condition arises, the inverter automatically enters Alarm mode in which you can view the corresponding alarm code*2 and its related information on the LCD monitor.

(*2: Alarm code: Indicates the cause of the alarm condition. Refer to the Instruction Manual and User's Manual of each model for details on each alarm code.)

Fig. 3.2-2 shows the status transition of the inverter between these three operation modes. If the inverter is turned ON, it automatically enters Running mode, making it possible to start or stop the motor.

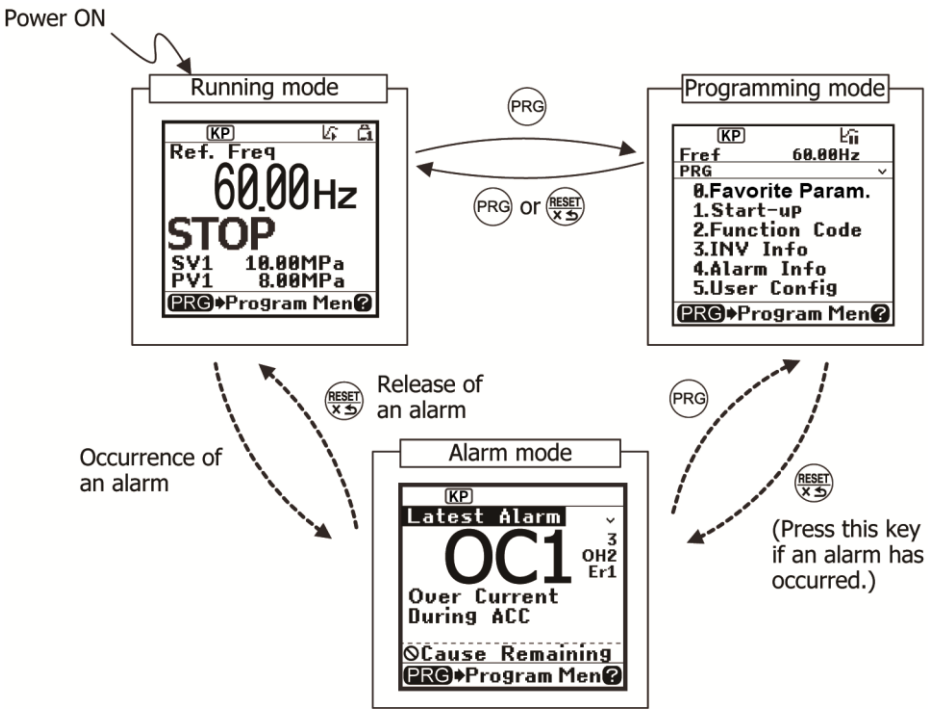

Fig. 3.2-2 Status transition between operation modes

3.3 Running Mode

Note This section describes the keypad (TP-E2) operation only. If using the Multi-function keypad (TP-A2SW), refer to the instruction manual for the Multi-function keypad (INR-SI47-2422□-E).

3.3.1 Operating state monitor

In running mode, the items in Table 3.3-1 below can be monitored. The monitor items set with function code E43 are displayed immediately after turning the power on. Press the FUNC/DATA key to switch between monitor items.

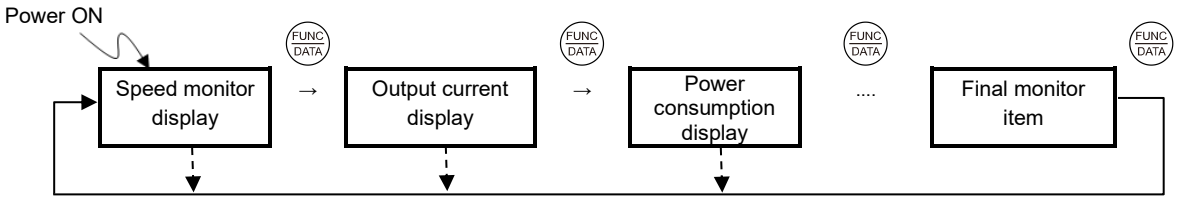

Tip Holding down the FUNC/DATA key brings back the initial display (the monitor items set with function code E43).

Table 3.3-1 Monitor items

Monitor item	Monitor example	LED indication	Unit	Meaning of displayed value	Data for E43
Speed monitor	Function code E48 specifies what to be displayed on the LED monitor and LED indicators.				0
Output frequency 1	50.00	●Hz ○A ○kW	Hz	Frequency (before slip compensation) actually being output	(E48 = 0)
Output frequency 2	50.00	●Hz ○A ○kW	Hz	Frequency (after slip compensation) actually being output	(E48 = 1)
Rerefernce frequency	50.00	●Hz ○A ○kW	Hz	Reference frequency being set	(E48 = 2)
Motor rotation speed	1500	●Hz ●A ○kW	min^{-1}	Output frequency (Hz) $\times \frac{120}{P01}$	(E48 = 3)
Load rotation speed	300.0	●Hz ●A ○kW	min^{-1}	Output frequency (Hz) x E50/E39	(E48 = 4)
Feed speed (Line speed)	300.0	○Hz ●A ●kW	m/min	Output frequency (Hz) x E50/E39	(E48 = 5)
Transport time for specified length	50	○Hz ○A ○kW	min	$\frac{E50}{\text{Output frequency (Hz)} \times E39}$	(E48 = 6)
Speed (%)	50.0	○Hz ○A ○kW	%	$\frac{\text{Output frequency (Hz)}}{\text{Max. frequency}} \times 100$	(E48 = 7)
Line speed set value	1800.	○Hz ○A ○kW	m/min	Line speed setting value after calculating acceleration/deceleration with d168 and d169 for feed speed set with E48 = 5	(E48=8)
Line speed output value	1800.	○Hz ○A ○kW	m/min	Roll frequency setting value compensated with winding diameter calculation result for line speed set with E48 = 5	(E48=9)
Output current	12.34	○Hz ●A ○kW	A	Current output from the inverter in RMS	3
Power consumption	10.25	○Hz ○A ●kW	kW	Input power to the inverter	9
Calculated torque *1	50	○Hz ○A ○kW	%	Motor output torque in % (Calculated value)	8
Output voltage *2	200U	○Hz ○A ○kW	V	Output voltage (RMS) of the inverter	4

● ON, ○ OFF

Table 3.3-1 Monitor items (cont.)

Monitor item	Monitor example	LED indication	Unit	Meaning of displayed value	Data for E43
Motor output *3	9.85	○Hz ○A ●kW	kW	Motor output (kW)	16
Load factor *4	50L	○Hz ○A ○kW	%	Load factor of the motor in % as the rated output being at 100%	15
PID process command *5, *6	10.00.	○Hz ○A ○kW	-	PID command/feedback amount converted to a physical quantity of the object to be controlled (e.g. temperature) Refer to function codes J106 and J107 for details.	10
PID feedback value*5, *7	9.00.	○Hz ○A ○kW	-		12
PID deviation*5, *7	1.00.	○Hz ○A ○kW	-	PID command value and PID feedback value deviation converted into physical quantities of the object to be controlled	29
PID output *5, *6	100.0.	○Hz ○A ○kW	%	PID output in % as the maximum output frequency being at 100%	14
Timer *10	50	○Hz ○A ○kW	S	Remaining time for timer operation (when C21 = 3)	13
Analog input monitor *8	82.00	○Hz ○A ○kW	-	An analog input to the inverter in a format suitable for a desired scale. Refer to the following function codes. Terminal [12]: C59, C60 Terminal [C1] (C1 function): C65, C66 Terminal [V2]: C71, C72 Terminal [C1] (V3 function): C85, C86	17
Current position*11	765 4321.	○Hz ○A ○kW	-	Alternate display of 4 higher order digits (with sign) and 4 lower order digits	21
Positioning deviation*11	765 4321.	○Hz ○A ○kW	-	Alternate display of 4 higher order digits (with sign) and 4 lower order digits	22
Position control start position*11	765 4321.	○Hz ○A ○kW	-	Alternate display of 4 higher order digits (with sign) and 4 lower order digits (with sign) for position when run command ON or when POS-SET enabled with user value	27
Stop target position*11	765 4321.	○Hz ○A ○kW	-	Alternate display of 4 higher order digits (with sign) and 4 lower order digits (with sign) for stop target position with user value	28
Torque current *9	48	○Hz ○A ○kW	%	Torque current command value or calculated torque current	23
Magnetic flux command *9	50	○Hz ○A ○kW	%	Magnetic flux command value	24
Integral power consumption	100.0	○Hz ○A ○kW	kWh	$\frac{\text{Input watt-hour (kWh)}}{100}$	25
Winding diameter*12	54321	○Hz ○A ○kW	mm	Winding diameter calculation result display for constant surface speed control	26
Torque bias	25	○Hz ○A ○kW	%	Torque bias value display	30
Estimated inertia acceleration/ deceleration time conversion value *101	1.234	○Hz ○A ○kW	s	Display of estimated inertia result in logic acceleration/deceleration time See function code P24.	31
Customizable logic output*13	82.00	○Hz ○A ○kW	-	Display of output content for specific customizable logic step See function codes U98, U99.	32
PID command value (final) (Note 5) (Note 6)	10.00.	○Hz ○A ○kW	J105, J205	The finally selected PID command value and PID feedback value are converted into physical quantities of the object to be controlled.	50 *101
PID feedback value (final) (Note 5) (Note 7)	9.00.	○Hz ○A ○kW			51 *101
PID output (Note 5) (Note 6)	100.0.	○Hz ○A ○kW	%	Displays PID output as a percentage, with the maximum output frequency being 100%.	52 *101

Table 3.3-1 Monitor items (cont.)

Monitor item	Monitor example	LED indication	Unit	Meaning of displayed value	Data for E43
PID control 1 command value (Note 5) (Note 6)	10.00.	○Hz ○A ○kW	J105	The PID control 1 PID command value and PID feedback value are converted into physical quantities of the object to be controlled.	53 *101
PID control 1 feedback value (Note5) (Note7)	9.00.	○Hz ○A ○kW			54 *101
PID control 2 command value (Note 5) (Note 6)	10.00.	○Hz ○A ○kW	J205	The PID control 2 PID command value and PID feedback value are converted into physical quantities of the object to be controlled.	55 *101
PID control 2 feedback value (Note 5) (Note 7)	9.00.	○Hz ○A ○kW			56 *101
External PID control 1 command value (final) (Note 5) (Note 6)	10.00.	○Hz ○A ○kW	J505, J605	The finally selected external PID command value and external PID feedback value are converted into physical quantities of the object to be controlled. See function codes J506, J507.	60 *101
External PID control 1 feedback value (final) (Note 5) (Note 7)	9.00.	○Hz ○A ○kW			61 *101
External PID control 1 output (Note 5) (Note 6)	100.0.	○Hz ○A ○kW	%	Displays external PID1 output as a percentage. (analog output, digital output possible) See function codes F31, J617.	62 *101
External PID control 1 manual command value (Note 5) (Note 6)	100.0.	○Hz ○A ○kW	%	Displays external PID1 manual command values as a percentage.	63 *101

*101 Supported with ROM0500 or later. ● ON, ○ OFF

*1 Calculated torque 100% is equal to the motor rated torque. For the calculation formula of the motor rated torque, refer to E.2 “Calculated formula” (1) in Appendix E “Conversion to other than SI Units.”

*2 If displaying the output voltage, U is displayed as the last digit on the LED monitor to denote the unit for V (volts).

*3 When the LED monitor displays the motor output, the unit LED indicator “kW” blinks.

*4 When the LED monitor displays the load factor, the 7-segment letter L in the lowest digit stands for “%”.

*5 Displayed only if performing PID control.

*6 When the LED monitor displays a PID command or its output amount, the dot (decimal point) attached to the lowest digit of the 7-segment letter blinks.

*7 When the LED monitor displays a PID feedback amount, the dot (decimal point) attached to the lowest digit of the 7-segment letter lights.

*8 The analog input monitor appears only when the analog input monitor function is assigned to one of the analog input terminals by one of function codes E61 to E63 and E66 (= 20). Specify the unit with C58, C64, C70 and C84.

*9 Displays 0 (zero) under V/f control.

*10 Displays (function code C21 = 3) only if performing timer operation.

*11 Displays when the position control function is enabled.

*12 Displays only if constant surface speed control is enabled with d41 = 1.

*13 Displays only if U00 = 1 and U98 ≠ 0.

Tip The monitoring signals for the monitor items such as keypad output frequency and output current can be filtered with function code E42 (LED display filter). If the display varies unstably so as to be hard to read due to load fluctuation or other causes, increase this filter time constant.
(📖 Function code E42)

3.3.2 Status display

Changes to the status display when not in the normal running status while in Running mode.

For example, this applies if the BX (coast to stop) command is entered and the motor is stopped with a run command entered, or if the inverter output differs from the command while restarting after a momentary power failure or during output limiting.

Depending on the applicable status, only the status code may appear on the LED monitor, or the running state monitor (frequency display, etc.) and status code may display alternately.

Table 3.3-2 Status display items

Status code	Content	Display method
En.OFF	A run command has been entered while either or both of the [EN1] and [EN2] terminals remain OFF.	Status code only
idLE	A run command has been entered while the BX command remains ON.	Status code only
dcOut	DC braking or pre-exitation is being performed.	Status code only
P.FAiL	The restart after momentary power failure function is running.	Displays alternately
rEtrY	The retry unction is running.	Displays alternately
F irE	The forced run function is running.	Displays alternately
L inE	Operation has changed to grid operation with the grid operation switching function.	Status code only
HEAt	The condensation prevention function is running.	Status code only
iaL	The current limiting function, torque limiting function, and anti-regenerative function are running, and the inverter output frequency is limited.	Displays alternately
oLP	The overload prevention function is running.	Displays alternately
SLEEP	The inverter has been stopped automatically by the PID control slow flowrate stopping function.	Displays alternately
rot	The rotation direction limiting function is running.	Status code only
F.StoP	The forced stop function is running, and the motor has decelerated to a stop.	Displays alternately
Abort	The PID tuning operation was interrupted for some reason.	Displays alternately
P id-t	Tuning operation is being performed with the PID tuning function.	Displays alternately
bAtrY	The motor is running in the battery operation status.	Displays alternately
E-Ld	An overload was detected with the overload detection function.	Displays alternately
rE.OFF	A run command has been entered while the RE (Run enable) command remains OFF. *100	Status code only
A.JAM	Anti jam protection function (function code J188) is running. *101	Displays alternately
A.CLoG	The filter clogging prevention function (function code J188) is running. *101	Displays alternately
booSt	The boost function (function code J143) is running. *101	Displays alternately
PUErr	The PID control 1, 2 PV level error recovery wait function is running. *101	Displays alternately
btCtr	The PID control 1 Wet-bulb temperature presumption control function (function code J198) is running. *101	Displays alternately

*100 Supported with ROM0300 or later.
*101 Supported with ROM0500 or later.

Tip The status display can be disabled if unnecessary. (📖 Function code K08)

3.3.3 Monitoring warnings

The FRENIC-MEGA identifies abnormal states in two categories-- Alarm and Warning. If a warning occurs, the running status monitor (frequency display, etc.) and warning code* display alternately on the LED monitor.

Which abnormal states are categorized as a warning ("Warning" object) should be defined with function codes H81, H82, and H83 beforehand. Furthermore, by assigning the warning "L-ALM" (data = 98) to a general-purpose output terminal, "L-ALM" signals are out to that terminal when a warning occurs.

* -- is added to the first 2 digits of the alarm code.
Example) "--OH 1" is displayed if cooling fin overheating OH 1 is assigned to a warning.

Running status monitor display

← Displays alternately →

Warning display

For details of the warning objects, refer to Chapter 6 "TROUBLESHOOTING."

■ Checking the content of past warnings

The content of warnings in 5_37 (Warning content (previous)) to 5_39 (Warning content (3rd last)).

For ROM0500 or later, 5_64 (Warning content (4th last)) and 5_65 (Warning content (5th last)) can also be checked.

For details on the menu transition of the maintenance information, refer to "3.4.5 Reading maintenance information "Maintenance Information: 5.CHE "".

■ Resetting light warnings

Refer to function codes H81, H82, and H83, and Chapter 6 "6.4 If a Warning Code is Displayed" , and eliminate the cause of the warning.

Once the cause has been eliminated, the warning code will no longer be displayed, and the general-purpose output "L-ALM" will also turn OFF.

3.3.4 Running or stopping the motor with the keypad

By factory default, pressing the (RUN) key starts running the motor in the forward direction and pressing the (STOP) key decelerates the motor to stop. The (RUN) key is enabled only in Running mode.

When the inverter is running, the RUN LED lights.

To run the motor in the reverse direction or to run it reversibly, change the data of function code F02 to “3” or “0,” respectively.

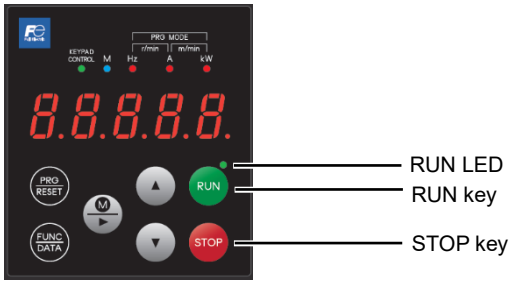

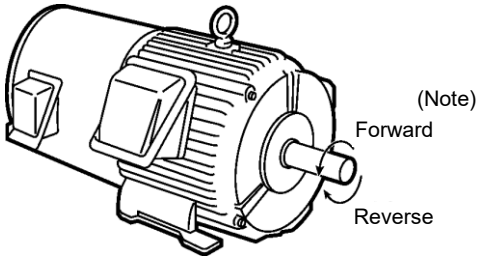

Note: The rotation direction of IEC-compliant motors is opposite to the one shown above.

Table 3.3-3 Operation relationship between function code F02 “Run, Operation” and “(RUN) key”

Data for F02	Motor rotation direction
0	In the direction commanded by terminal [FWD] or [REV]
1	Disable key (The motor is driven by terminal [FWD] or [REV] command.)
2	In the forward direction
3	In the reverse direction

Tip

If the motor cannot be run or stopped even by pressing the (RUN)/(STOP) key at such times as when function code F02 = 1 , or if running and stopping the motor with RS-485 communication, display “3.3.10 Display when keypad operation disabled (command source display)” for 2 seconds.
Test running can be stopped with the (STOP) key from Loader even while performing a test run. Set y99 again to resume the test run after stopping.

3.3.5 Setting the reference frequency with the keypad

The frequency setting can be specified using the keypad (▲)/(▼) keys. The set frequency can also display the load rotation speed, etc. based on the E48 setting.

<u>Setting the frequency with the keypad (F01 = 0 (factory default) or 8)</u>

(1) Set function code F01 to “0” (keypad operation using (▲)/(▼) keys) or “8” (keypad operation using (▲)/(▼) keys, balanceless/bumpless). Frequency setting with the keypad is disabled in Programming or Alarm mode. To enable it, switch to Running mode. When the keypad is set to Programming or Alarm mode, the (▲)/(▼) keys are disabled to modify the reference frequency. You need to switch to Running mode to enable frequency setting with the (▲)/(▼) keys.

(2) By pressing the (▲)/(▼) key, the set frequency is displayed, and the rightmost digit flashes.

(3) By pressing the (▲)/(▼) keys again, it is possible to change the reference frequency. The new setting can be saved into the inverter’s internal memory.

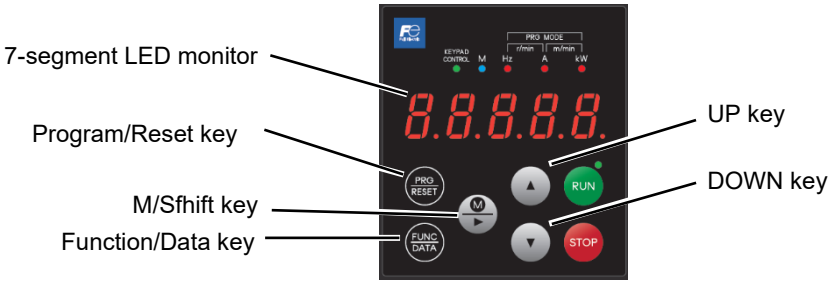

Tip

- In order to perform setting such as reference frequency, press ▲/▼ once and when the least significant digit flashes, push down the key, and then, the flashing digit will move. Therefore, it is possible to change the large numerical number easily.
- Holding down the ▲/▼ key changes data in the least significant digit and generates a carry.
- The reference frequency can be saved either automatically by turning the main power OFF or only by pressing the FUNC/DATA key. You can choose either way using function code E64. (The factory default is “0” (Automatic saving when main power is turned OFF)).
- While the function code F01 data is set to “0” or “8”, when a setting method other than frequency setting 1 (frequency setting 2, communication, multistep frequency, etc.) is selected as the frequency setting, it is not possible to change the reference setting with the ▲/▼ keys even if the keypad is in running mode. In this case, display “3.3.10 Display when keypad operation disabled (command source display)” for 2 seconds.
- By setting function code F01 data to “8: Keypad operation using ▲/▼ keys (with balanceless/bumpless)” balanceless/bumpless is enabled.

  Balanceless-bumpless switching refers to the function that makes the inverter inherit the current frequency that has applied before the frequency command source is switched to the keypad from any other source, providing smooth switching and shockless running. By using this function, even if the frequency setting method is switched, it is possible to perform operation without shock.

3.3.6 Setting PID commands with the keypad

PID commands can be set with the ▲ and ▼ keys on the keypad.

[1] Settings under PID process control

To enable the PID process control, you need to set the J01 data to “1” or “2.”

To enable PID control 1 or PID control 2, it is necessary to set function code J01 data to “0”, and J101 or J201 data to “1” or “2”. *101

Under the PID control, the items that can be specified or checked with ▲ and ▼ keys are different from those under regular frequency control, depending upon the current LED monitor setting. If the LED monitor is set to the speed monitor (E43 = 0), the item accessible is a manual speed command (reference frequency); if it is set to any other, the item is a PID process command.

<u>Setting the PID process command with ▲ and ▼ keys</u>

(1) Set function code J02 or J102/J202 *101 to “0” (▲/▼ keys on keypad).

(2) Set the LED monitor to other than the speed monitor (E43=0) in keypad Running mode. When the keypad is in Programming or Alarm mode, you cannot modify the PID process command with the ▲/▼ key. To make it possible for PID process commands to be set using the ▲/▼ keys, switch to running mode.

(3) Press the ▲/▼ key to display the PID process command. The lowest digit and its decimal point blink on the LED monitor.

(4) To change the PID process command, press the ▲/▼ key again. The new setting can be saved into the inverter’s internal memory.

Tip

- The PID process command can be saved either automatically by turning the main power OFF or only by pressing the FUNC/DATA key. You can choose either way using function code E64.
- Even if multistep frequency is selected as a PID command (***PID-SS1*** or ***PID-SS2*** = ON), it is possible to set a PID command using the keypad.
- When function code J02 is set to any value other than “0,” pressing the ▲/▼ key displays, on the LED monitor, the PID command currently selected, but does not allow any change.
- On the LED monitor, the decimal point of the lowest digit is used to discriminate the PID related data from the reference command. The decimal point blinks or lights when a PID command or PID feedback amount is displayed, respectively.

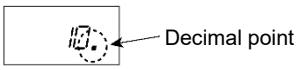

*101 Supported with ROM0500 or later.

Table 3.3-4 PID process command manually set with ▲/▼ key and requirements

PID control (Mode selection) J01 J101/J201 *101	PID control (Remote command SV) J02 J102/J202 *101	LED monitor E43	PID control multistage command ***PID-SS1***, ***PID-SS2***	With ▲/▼ key
1 or 2	0	Other than 0	ON or OFF	PID process command with keypad
	Other than 0			PID process command currently selected

Setting up the reference frequency with ▲ and ▼ keys under PID process control

When function code F01 is set to "0" (▲/▼ keys on keypad) and frequency setting 1 is selected as a manual speed command (when disabling the frequency setting command via communications link, multistep frequency command, and PID control), switching the LED monitor to the speed monitor in Running mode enables you to modify the reference frequency with the ▲ and ▼ keys.

However, when the keypad is set to Programming or Alarm mode, the ▲ and ▼ keys are disabled to modify the reference frequency. You need to switch to Running mode to enable frequency setting with the ▲ and ▼ keys. Table 3.3-5 below lists the combinations of the commands. Table 3.3-5 illustrates how the manual speed command entered via the keypad is translated to the final frequency command.

The setting procedure is the same as that for setting of a usual reference frequency.

In the case of conditions other than the above, the following is displayed by pressing the ▲/▼ keys.

Table 3.3-5 Manual speed (frequency) command specified with ▲/▼ keys and required settings

PID control (Mode selection) J01 J101/J201 *101	LED monitor E43	Frequency setting 1 F01	Multistep frequency ***SS2***	Multistep frequency ***SS1***	Select link operation ***LE***	Cancel PID control ***Hz/PID***	Pressing ▲/▼ keys controls:
1 or 2	0	0	OFF	OFF	OFF	ON (PID disabled)	Manual speed command (frequency) set with keypad
		Other than above					Manual speed command (frequency) currently selected
		Not required				OFF (PID enabled)	PID output (as final frequency command)

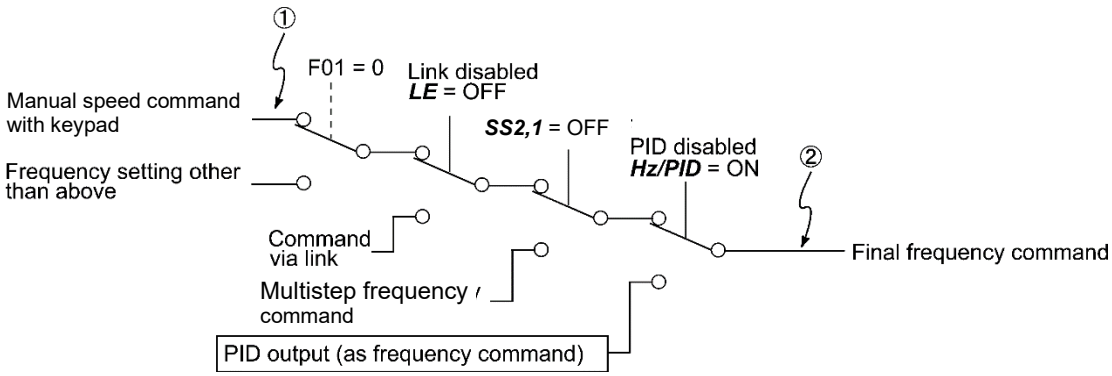

*101 Supported with ROM0500 or later.

[2] Settings under PID dancer control

To enable the PID dancer control, you need to set the J01 data to “3.”

Under the PID control, the items that can be specified or checked with ▲ and ▼ keys are different from those under regular frequency control, depending upon the current LED monitor setting.
If the LED monitor is set to the speed monitor (E43 = 0), the item accessible is the primary frequency command; if it is set to any other, the item is the PID dancer position set point.

Setting the PID dancer position set point with the ▲ and ▼ keys

(1) Set function code J02 to “0” (▲/▼ keys on keypad).

(2) Set the LED monitor to other than the speed monitor (E43=0) in keypad Running mode. When the keypad is in Programming or Alarm mode, you cannot modify the PID dancer position set point with the ▲/▼ key. To enable PID commands using the ▲/▼ keys, switch to running mode.

(3) Press the ▲/▼ key to display the PID dancer position set point. The lowest digit and its decimal point blink on the LED monitor.

(4) To change the PID dancer position set point, press the ▲/▼ key again. The set PID command is saved internally as function code J57, and after switching to another PID command setting method, commands are saved even after returning to the PID command with the keypad. Furthermore, you can directly configure the command with function code J57.

Tip

- Even if multistep frequency is selected as a PID command (***PID-SS1*** or ***PID-SS2*** = ON), it is possible to set a PID command using the keypad.
- When function code J02 is set to any value other than “0,” pressing the ▲/▼ key displays, on the LED monitor, the PID command currently selected, but does not allow any change.
- On the LED monitor, the decimal point of the lowest digit is used to discriminate the PID related data from the reference command. The decimal point blinks or lights when a PID command or PID feedback amount is displayed, respectively.

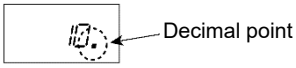

Table 3.3-6 PID command manually set with ▲/▼ key and required settings

PID control (Mode selection) J01	PID control (Remote command SV) J02	LED monitor E43	PID control multistage command ***PID-SS1, PID-SS2***	With ▲/▼ key
3	0	Other than 0	ON or OFF	PID command with keypad
	Other than 0			PID command currently selected

Setting up the primary frequency command with ▲ and ▼ keys under PID dancer control

When function code F01 is set to “0” (▲/▼ keys on keypad) and frequency setting 1 is selected as a main setting (when disabling the frequency setting command via communications link, multistep frequency command, and PID control), switching the LED monitor to the speed monitor in Running mode enables you to modify the main setting with the ▲/▼ keys. When the keypad is set to Programming or Alarm mode, changes to the main settings cannot be made with the ▲/▼ keys. Switch to Running mode. Table 3.3-7 below lists the combinations of the commands. Table 3.3-7 illustrates how main setting command (1) entered with the keypad is translated to final frequency command (2).

The setting procedure is the same as that for setting of a usual reference frequency.

In the case of conditions other than the above, the following is displayed by pressing the ▲/▼ keys.

Table 3.3-7 Main settings (frequency settings) specified with ▲/▼ keys and required settings

PID control (Mode selection) J01	LED monitor E43	Frequency setting 1 F01	Multistep frequency ***SS2***	Multistep frequency ***SS1***	Select link operation ***LE***	Cancel PID control ***Hz/PID***	Pressing ▲/▼ keys controls:
3	0	0	OFF	OFF	OFF	ON (PID disabled)	Main settings (frequency settings) specified with keypad
		Other than above					Primary command (frequency) currently selected
		Not required				OFF (PID enabled)	PID output (as final frequency command)

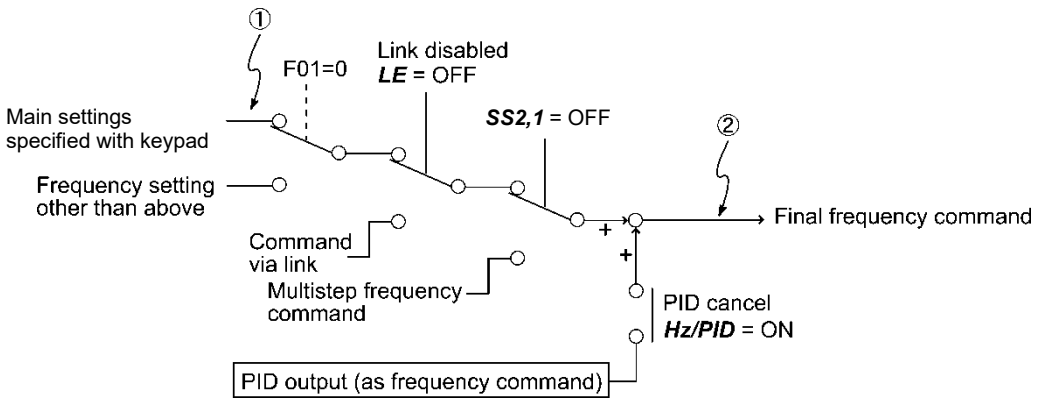

3.3.7 Jogging operation

This section provides the procedure for jogging the motor.

(1) Make the inverter ready to jog by following the steps below. The LED monitor should display JOG.

- Set the operation mode to Running mode. (See “3.2 Overview of Operation Modes”.)
- Press the (STOP) + (▲) keys simultaneously. The LED monitor displays the jogging frequency for approximately one second and then displays JOG again.

Tip

- Function codes C20, H54 and H55 specify the jogging frequency and acceleration/deceleration time, respectively. Use these function codes exclusively for the jogging operation with your needs.
- Alternatively, using the input terminal command ***JOG*** (“Ready for jogging”) switches between the normal operation state and ready-to-jog state.
- Switching between the normal operation state and read-to-jog state with the (STOP) + (▲) keys is possible only when the inverter is stopped.

(2) Jogging the motor.

- Hold down the keypad (RUN) key during which the motor continues jogging. To decelerate to stop the motor, release the (RUN) key.

(3) Exiting the ready-to-jog state and returning to the normal operation state.
Press the (STOP) + (▲) keys simultaneously.

Refer to function codes E01 to E09 in Chapter 5 “5.3.2 E codes (Extension terminal functions)” for details.

3.3.8 Switching between local and remote modes

When performing normal operation, the motor runs in the remote mode with the operation method set at the inverter, and when performing maintenance, it is possible to switch to the local mode used for performing operation with the keypad. In local mode, the inverter is isolated from the system. In this mode, the inverter is run, and the necessary work is carried out by performing all operations from the keypad.

· Remote mode: Run and frequency commands are selected by function codes or source switching signals except ***LOC*** ("Select local (keypad) command").
If the RUN/STOP is pressed while in remote mode, "3.3.10 Display when keypad operation disabled (command source display)" is displayed for 2 seconds.

· Local mode: The command source is the keypad, regardless of the settings specified by function codes. The keypad takes precedence over the settings specified by communications link operation signals.

The KEYPAD CONTROL LED blinks once every second while in local mode.

The table below shows the input procedures of run commands from the keypad in the local mode.

F02 data	Input procedures of run commands from keypad
0: Keypad operation (Rotation direction input: Terminal block)	The motor can be run and stopped by pressing the keypad RUN/STOP keys. The rotation direction is specified with terminals [FWD] and [REV].
1: External signal	The motor can be run and stopped by pressing the keypad RUN/STOP keys. There is no need to specify the rotation direction. However, the motor cannot be rotated in the reverse direction if only forward rotation is specified.
2: Keypad operation (forward rotation)	
3: Keypad operation (reverse rotation)	The motor can be run and stopped by pressing the keypad RUN/STOP keys. There is no need to specify the rotation direction. However, the motor cannot be rotated in the forward direction if only reverse rotation is specified.

The following two methods can be used to switch between remote mode and local mode.

1. Assign data = 35 ***LOC*** to function code E70, and hold down the key on the keypad.
2. Assign data = 35 ***LOC*** to any of the function codes E01 to E09, E98, or E99, and turn on the applicable digital input terminal.

Switching from remote to local mode automatically inherits the frequency settings used in remote mode.

If the motor is running at the time of the switching from remote to local, the keypad run command will be automatically turned ON so that all the necessary data settings will be carried over.

If, however, there is a discrepancy between the settings used in remote mode and ones made on the keypad (e.g., switching from the reverse rotation in remote mode to the forward rotation only in local mode), the inverter automatically stops.

Status transition and the operation status differ based on the remote/local status, and the local (keypad) command selection ***LOC*** signal combination. Also, refer to above table for details.

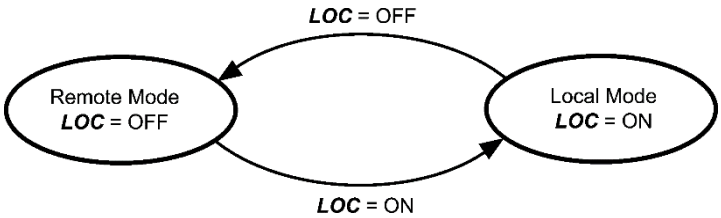

Transition between remote and local modes by LOC

3.3.9 Changing the M/Shift key function

When in Running mode, various functions can be assigned to the M/Shift key in the same way as digital input terminals based on the function code E70 setting. The switching between remote and local modes described in the previous section is one of these functions.

The factory default setting is 100 (no functions).

Refer to the description of function code E70 in Chapter 5 “5.3.2 E codes (terminal functions)” for details.

3.3.10 Display when keypad operation disabled (command source display)

When the RUN/STOP key or ▲/▼ key is pressed in running mode (monitor item display), the command source is displayed for 2 seconds if these operations are disabled.

However, in such cases as where keypad key information reading is enabled with customizable logic, the command source will not display if the RUN/STOP key or ▲/▼ key is being used for another function.

Table 3.3-8 Display when run/stop operation is disabled with RUN/STOP key

Displayed content	Reason for operation being disabled	Displayed content	Reason for operation being disabled
di	Terminal block input	buS	Bus option input
rS.Ch1	RS-485 port 1 input	Ldr	FRENIC Loader input
rS.Ch2	RS-485 port 2 input		

Table 3.3-9 Display when frequency change operation disabled with ▲/▼ key

Displayed content	Reason for operation being disabled	Displayed content	Reason for operation being disabled
Ai.I2	Voltage input (terminal [12])	rS.Ch1	RS-485 port 1 input
Ai.C1	Current input (terminal [C1])	rS.Ch2	RS-485 port 2 input
I2-C1	Voltage + current input (terminal [12] + [C1])	buS	Bus option input
Ai.U2	Voltage input (terminal [V2])	Ldr	FRENIC Loader input
Ai.U3	Voltage input (terminal [V3])	MuLti	Multistep frequency input
uP-dn	UP/DOWN (terminal [X1 X9])	Pid	PID control input
Ptn	Pattern operation	nonE	No command source
di	OPC-DI (option) input	F-oPE	Forced operation (Fire Mode) is running *101
PuLSE	Pulse train input		

*101 Supported with ROM0500 or later.

Displays for 2 seconds

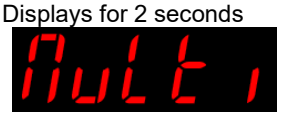

By pressing the ▲/▼ key during multistep frequency operation, “MuLti”, meaning multistep frequency input, displays for 2 seconds.

Display example in which ▲/▼ operation is disabled

3.4 Programming Mode

The Programming mode provides you with the following functions--setting and checking function code data, monitoring maintenance information and checking input/output (I/O) signal status. The functions can be easily selected with the menu-driven system. Table 3.4-1 below lists menus available in Programming mode. The leftmost digit (numerals) of each letter string on the LED monitor indicates the corresponding menu number and the remaining digits indicate the menu contents.

When the inverter enters Programming mode from the second time on, the menu selected last in Programming mode will be displayed.

Table 3.4-1 Menus available in programming mode

Menu #	Menu	LED monitor indication	Main function		Ref.
1	"Data Setting"	1.F_ _	F codes (Fundamental functions)	Function codes can be displayed and changed. (note1)	Section 3.4.1
		1.E_ _	E codes (Extension terminal functions)		
		1.C_ _	C codes (Control functions)		
		~ (Omitted) ~			
		1.o_ _	o codes (optional functions)		
		1.T_ _	T codes (Scheduled operation) *101		
		1.K_ _	K codes (keypad functions)		
2	"Data Checking"	2.rEP	Displays only function codes that have been changed from their factory defaults. The function code data can be referenced and changed.		Section 3.4.2
3	Run monitor	3.oPE	Displays the running information required for maintenance or test runs.		Section 3.4.3
4	I/O check	4.I_o	Displays external interface information.		Section 3.4.4
5	"Maintenance Information"	5.CHE	Displays maintenance information including cumulative run time.		Section 3.4.5
6	Alarm Information	6.AL	Alarm codes for the past four alarms can be displayed, and operating information at the time each alarm occurred can be referenced.		Section 3.4.6
7	Data copy	7.CPY	Function code data can be read, written, and verified.		Section 3.4.7
8	Destination setting	8.dESt	Sets the region (overseas) in which the product is used.		Section 4.4
9	Communication monitor	9.S_ _ 9.Addr 9.dAtA	Codes communicated back and forth between the host device can be monitored, and communication commands can be entered.		Section 3.4.8
0	Favorites	0.FnC	Only function codes selected by users can be referenced or changed.		Section 3.4.9

(note1) Data cannot be changed while the decimal point "." is displayed after the last digit on the LED monitor. (The password lock is ON.)

Refer to function codes H99, H197, H198, and H199 in Chapter 5 "5.3.5 H codes (High performance functions)" for details.

*101 Supported with ROM0500 or later.

Tip Enter Programming mode at the keypad to display the menu. Change the menu with the ▲ and ▼ keys, and select the desired menu item with the FUNC/DATA key. Once the entire menu has been cycled through, the display returns to the first menu item.
Press the M key to proceed to the next menu number.

3.4.1 Setting function codes "Data Setting: 1.F__ to 1.P__"

Menu number 1 "Data Setting" (1.F__ through 1.P__) in Programming mode allows you to configure all function codes. The Fig. 3.4-1 shows "Data Setting" menu transition and function code data change procedure.

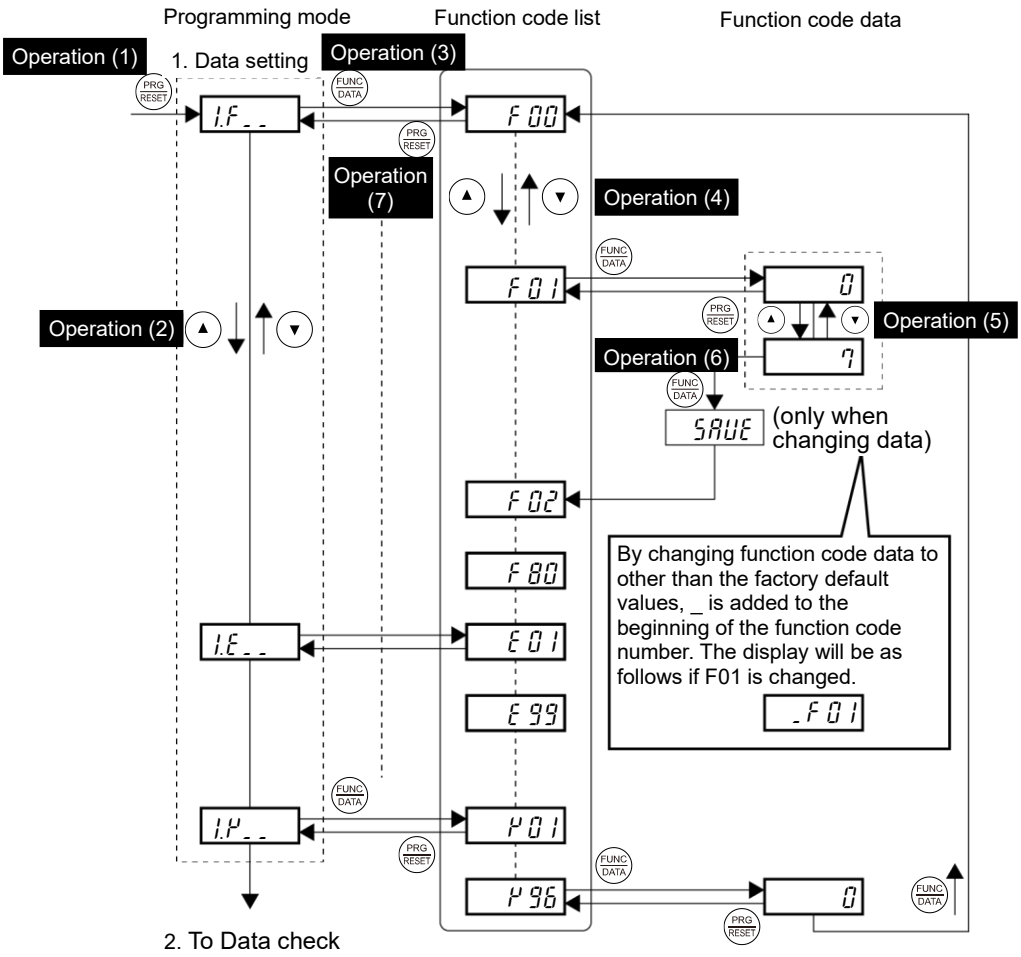

Fig. 3.4-1 "Data Setting" menu transition and function code data change procedure

Basic key operation

Operation (1) Turn the inverter ON. It automatically enters Running mode in which you press the PRG/RESET key to switch to Programming mode. The function selection menu appears.

Operation (2) Use the ▲ and ▼ keys to select the desired function code group from the choices 1.F__ to 1.P__.
Press the M/▶ key to jump to "2. Data Checking".

Operation (3) Press the FUNC/DATA key to proceed to a list of function codes for the selected function code group.

Operation (4) Use the ▲ and ▼ keys to display the desired function code, then press the FUNC/DATA key.
Data for the relevant function code appears.
Press the M/▶ key to skip to the function code number +10. When the end is reached, the display returns to the beginning of the same function code group.

Operation (5) Change the function code data using the ▲ and ▼ keys.

Operation (6) Press the FUNC/DATA key to establish the function code data.
SAUE appears, and the data will be saved in the memory inside the inverter. After that, the display will return to the function code list and then move to the next function code.
Pressing the PRG/RESET key instead of the FUNC/DATA key cancels the change made to the data. The data reverts to the previous value, the display returns to the function code list, and the original function code reappears.

Operation (7) Press the PRG/RESET key to return to the menu from the function code list.

Tip

When changing function code data, pressing the (M) key once blinks the least significant digit. After that, each time the (M) key is pressed, the cursor moves to the next higher digit where data can be changed. This cursor movement allows you to easily move the cursor to the desired digit and change the data in higher digits. This cursor movement allows you to easily move the cursor to the desired digit and change the data in higher digits.

Frequently used function codes can be registered in “Favorites”. Refer to section "3.4.9 Setting “Favorites” function code data” for details.

Operation example: Operating procedure when changing C05 (multistep frequency 1) from 0.00 to 25.00

The following screens correspond to previous operations (1) to (6).

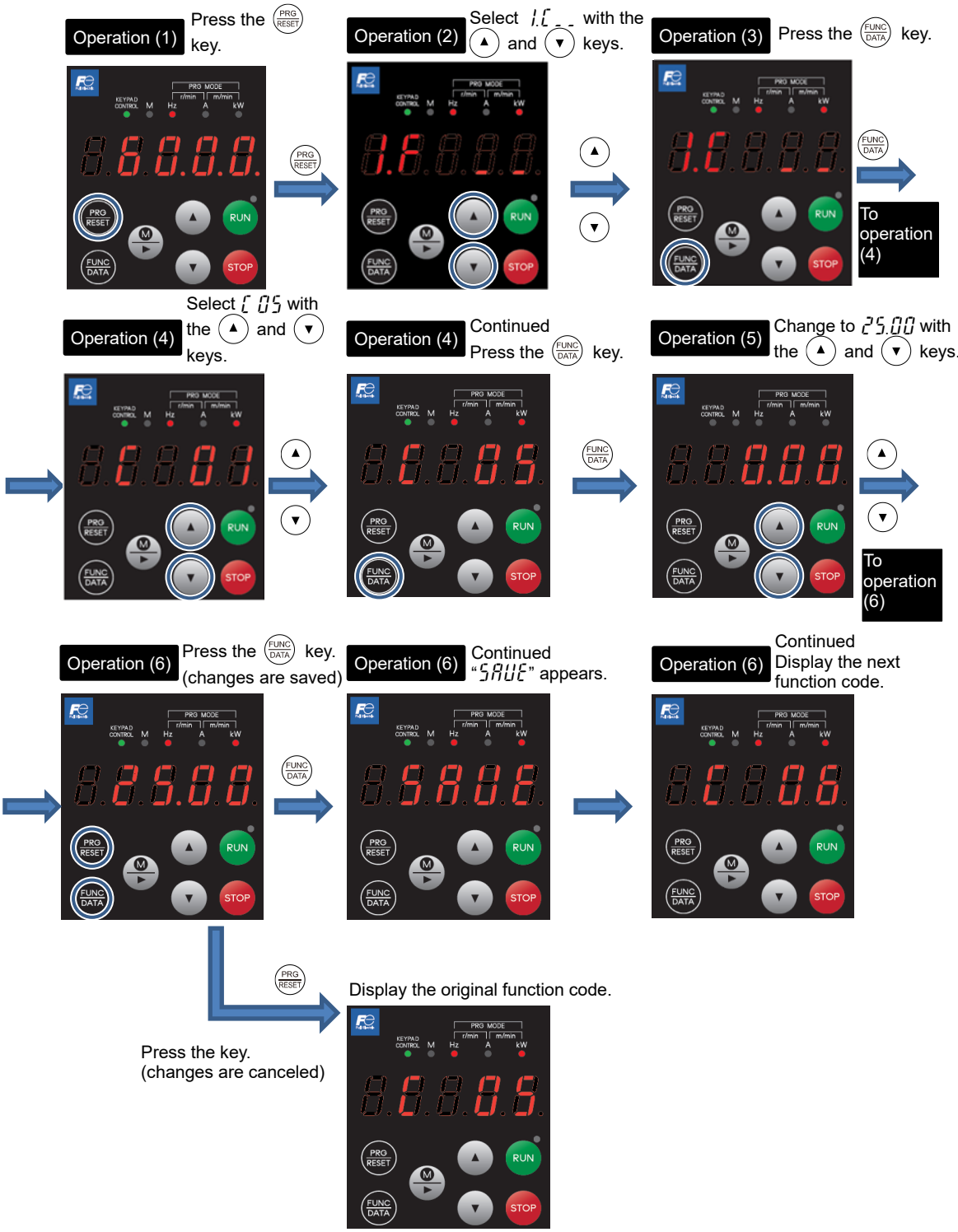

3.4.2 Checking changed function codes “Data Checking: 2.rEP”

Changed function codes can be checked at “Data Checking: 2.rEP” in menu number 2 of Programming mode. Only the function codes whose data has been changed from the factory defaults are displayed on the LED monitor. You can refer to the function code data and change it again if necessary. Changed function code has _ at the beginning.

The menu transition in “Data Checking” is the same as the one in Menu number 1 “Data Setting.”

The lower left bar of the function code lights up if changes are made to the factory default setting value.

Display example following change to Function code F03 data

3.4.3 Monitoring the running status "Drive Monitoring: 3.oPE"

Menu number 3 "Drive Monitoring: 3.oPE" is used to monitor the running status during maintenance and test running.
The monitor number and symbol are displayed alternately every 1 second.

Table 3.4-2 "Drive Monitoring" display items

Monitor No.	Symbol	Item	Unit	Description
3.00	Fout1	Output frequency 1	Hz	Output frequency before slip compensation
3.01	Fout2	Output frequency 2	Hz	Output frequency after slip compensation
3.02	iout	Output current	A	Output current
3.03	Uout	Output voltage	V	Output voltage
3.04	trq	Torque calculated value	%	Motor output torque in % (Calculated value)
3.05	FrEF	Set frequency	Hz	Frequency specified by frequency command
3.06	rot	Rotation direction	N/A	Displays the current rotation direction F: forward, r: reverse, ------: stop
3.07	StAt1	Running status	N/A	Indicates the running status. Refer to "Displaying running status (3.07) and running status 2 (3.23)" on the next page for details.
3.08	Sync	Motor rotation speed	r/min	Display value = 120 × $\frac{\text{(Output frequency Hz)}}{\text{(No. of motor poles)}}$
3.09	LoAd	Load shaft speed	r/min	Display value = (Output frequency Hz) × $\frac{\text{Function code E50}}{\text{Function code E39}}$
3.10	SU	PID process command	N/A	Virtual physical value (e.g., temperature or pressure) of the object to be controlled, which is converted from the PID command value using function code J106 and J107 data (PID display Maximum scale/ minimum scale) Display value = (PID command value (%)) / 100 * (Max. scale - Min. scale) + Min. scale If PID control is disabled, "-----" appears.
3.11	PU	PID feedback amount	N/A	Virtual physical value (e.g., temperature or pressure) of the object to be controlled, which is converted from the PID feedback amount using function codeJ106 and J107 data (PID display Maximum scale/ minimum scale) Display value = (PID feedback value (%)) / 100 * (Max. scale - Min. scale) + Min. scale If PID control is disabled, "-----" appears.
3.12	tL-A	Torque limit value A	%	Driving torque limit value A (based on motor rated torque)
3.13	tL-b	Torque limit value B	%	Braking torque limit value B (based on motor rated torque)

Table 3.4-2 “Drive Monitoring” display items (cont.)

Monitor No.	Symbol	Item	Unit	Description
3_14	rAtio	Ratio setting	%	When this setting is 100%, the LED monitor shows 1.00 time of the value to be displayed. If no ratio setting is selected, “- - - - -” appears.
3_15	LinE	Feed speed	m/min	(Output frequency Hz) × $\frac{\text{Function code E50}}{\text{Function code E39}}$
3_16	LSC	Peripheral speed	m/min	The constant surface speed control winding speed is displayed.
3_17	E	Stop target position	N/A	Refer to Chapter 5 “5.3.17 [1] Position control.”
3_18	P	Current position	N/A	
3_19	dP	Position deviation	N/A	
3_20	PoS.Md	Position control status monitor	N/A	
3_21	MU	PID output value	%	Displays the PID output value. (100% at maximum frequency) If PID control is disabled, “- - - - -” appears.
3_22	FLUX	Flux command value	%	Magnetic flux command value.
3_23	StAt2	Running status 2	N/A	Refer to “Displaying running status (3_07) and running status 2 (3_23)” for details.
3_24	ntc	Motor temperature	°C	Temperature detected with NTC thermistor built in to the motor (VG motor) “- - - - -” appears if no NTC thermistor connection has been set.
3_25	SY-d	Master-follower operation deviation	deg	Displays the current angle deviation. Refer to Chapter 5 “5.3.15 [3] Master-follower operation.”
3_29	PG-Fb	PG feedback value	Hz	Displays the frequency detected by the PG in Hz regardless of the control method.
3_32	trq.b	Torque bias command	%	Displays the selected torque bias command value.
3_34	dt-Ld	Load detection monitor	%	Displays momentary detected loads. Refer to Chapter 5 “5.3.16 d1 codes (Applied functions 2) [1] Hoist function” for details.
3_35	Lin-i	Constant surface speed control line speed setting value	m/min	Displays the [Motor setting speed × winding diameter ratio].
3_36	Lin-o	Constant surface speed control line speed output	m/min	Displays the [Motor output speed × winding diameter ratio].
3_50	P-rEF	Command (master) side AB-phase pulse rate	kp/s	Displays the pulse rate input to the PG AB-phase used as the command (master) side.
3_51	Z-rEF	Command (master) side Z-phase pulse rate	p/s	Displays the pulse rate input to the PG Z-phase used as the command (master) side.
3_52	P-Fb	Feedback (follower) side AB-phase pulse rate	kp/s	Displays the pulse rate input to the PG AB-phase used as the feedback (follower) side.
3_53	Z-Fb	Feedback (follower) side Z-phase pulse rate	p/s	Displays the pulse rate input to the PG Z-phase used as the feedback (follower) side.

Table 3.4-2 “Drive Monitoring” display items (cont.)

Support for monitor No. 3_54 onward is possible with ROM0500 or later.

Monitor No.	Symbol	Item	Unit	Description
3_54	SU1	PID control 1 command value (Physical value)	N/A	PID control 1 command values are converted into physical quantities of the object to be controlled (temperature or pressure, etc.) using function code J106 and J107 data (PID display max., min. values). Display value = (PID control 1 command value (%)/100) x (display max. value - min. value) + display min. value. “- - - - -” appears when PID control (function code J101) is enabled, and PID control 1 (function code J101) is disabled.
3_55	PU1	PID control 1 feedback value (Physical value)	N/A	PID control 1 feedback values are converted into physical quantities of the object to be controlled (temperature or pressure, etc.) using function code J106 and J107 data (PID display max., min. values). The display format is the same as that for 3_54.
3_56	SU2	PID control 2 command value (Physical value)	N/A	PID control 2 command values are converted into physical quantities of the object to be controlled (temperature or pressure, etc.) using function code J206 and J207 data (PID display max., min. values). The display format is the same as that for 3_54.
3_57	PU2	PID control 2 feedback value (Physical value)	N/A	PID control 2 feedback values are converted into physical quantities of the object to be controlled (temperature or pressure, etc.) using function code J206 and J207 data (PID display max., min. values). The display format is the same as that for 3_54.
3_60	E-SU	External PID1 final command	N/A	External PID1 final command values are converted into physical quantities of the object to be controlled (temperature or pressure, etc.) using function code J506 and J507 data (PID display max., min. values). The display format is the same as that for 3_54. “- - - - -” appears when disabled (J501 = 0).
3_61	E-PU	External PID feedback value	N/A	Displays the external PID1 final feedback value. The display format is the same as that for 3_60.
3_62	E-MU1	External PID output	%	Displays the external PID output value. “- - - - -” appears when disabled.
3_63	E-MS1	External PID manual command value	%	Displays the external PID manual command value. “- - - - -” appears when disabled (J501 = 0 or there is no “%/EPID1” assignment).
3_64	E-SU1	External PID1 command	N/A	Displays the external PID1 command value. “- - - - -” appears when disabled (J501 = 0).
3_65	E-PU1	External PID1 feedback value	N/A	Displays the external PID1 feedback value.

Table 3.4-2 “Drive Monitoring” display items (cont.)

Support for monitor No. 3.54 onward is possible with ROM0500 or later.

Monitor No.	Symbol	Item	Unit	Description
3.70	E-SU2	External PID2 command	N/A	Displays the external PID2 command value. “- - - - -” appears when disabled (“J601 = 0 and J501 = 0” or “J601 = 0 and J504 = 0”).
3.71	E-PU2	External PID2 feedback value	N/A	Displays the external PID2 feedback value.
3.72	E-MU2	External PID2 output	%	Displays the external PID2 output value. “- - - - -” appears when disabled.
3.73	E-MS2	External PID2 manual command value	%	Displays the external PID2 manual command value. “- - - - -” appears when disabled (J601 = 0 or there is no“%/EPID2” assignment).
3.80	E-SU3	External PID3 command	N/A	Displays the external PID3 command value. “- - - - -” appears when disabled (J651 = 0).
3.81	E-PU3	External PID3 feedback value	N/A	Displays the external PID3 feedback value.
3.82	E-MU3	External PID3 output	%	Displays the external PID3 output value. “- - - - -” appears when disabled.
3.83	E-MS3	External PID3 manual command value	%	Displays the external PID3 manual command value. “- - - - -” appears when disabled (J651 = 0 or there is no “%/EPID3” assignment).

■ Displaying running status (3_07) and running status 2 (3_23)

To display the running status and running status 2 in hexadecimal format, each state has been assigned to bits 0 to 15 as listed in Table 3.4-3 and Table 3.4-4 respectively. Table 3.4-5 shows the relationship between each of the status assignments and the LED monitor display.

Table 3.4-6 shows the conversion table from binary to hexadecimal.

Table 3.4-3 Running status (3_07) bit assignment

Bit	Symbol	Content	Bit	Symbol	Content
15	BUSY	“1” when function code data is being written.	7	VL	“1” under voltage limiting control.
14	WR	Always “0.”	6	TL	“1” under torque limiting control.
13		Always “0.”	5	NUV	“1” when the DC link bus voltage is higher than the under voltage level.
12	RL	“1” when communication is enabled (when ready for run and frequency commands via communications link).	4	BRK	“1” during braking.
11	ALM	“1” when an alarm has occurred.	3	INT	“1” when the inverter output is shut down.
10	DEC	“1” during deceleration.	2	EXT	“1” during DC braking.
9	ACC	“1” during acceleration.	1	REV	“1” during running in the reverse direction.
8	IL	“1” under current limiting control.	0	FWD	“1” during running in the forward direction.

Table 3.4-4 Running status 2 (3_23) bit assignment

Bit	Symbol	Content	Bit	Symbol	Content
15	-	Drive motor type 0000: induction motor 1000: synchronous motor	7	-	Speed limiting (under torque control)
14			6	-	(Not used)
13			5	-	Motor selection 00: Motor 1 01: Motor 2 10: Motor 3 11: Motor 4
12			4		
11	-	(Not used)	3	-	Control method 0000: V/f control without slip compensation inactive 0001: Dynamic torque vector control 0010: V/f control with slip compensation active 0011: V/f control with sensor 0100: Dynamic torque vector control with sensor 0101: Sensorless vector control 0110: Vector control for IM with sensor 1010: Torque control (sensorless vector control) 1011: Torque control (vector control with sensor)
10			2		
9			1		
8			0		

Table 3.4-5 Running status display example

LED No.		LED 4				LED 3				LED 2				LED 1			
Bit		15	14	13	12	11	10	9	8	7	6	5	4	3	2	1	0
Symbol		BUSY	WR	RL		ALM	DEC	ACC	IL	VL	TL	NUV	BRK	INT	EXT	REV	FWD
Display example	Binary	1	0	0	0	0	0	1	1	0	0	1	0	0	0	0	1
	Hexadecimal on the LED monitor	LED5 LED4 LED3 LED2 LED1 8.8.9.2.1.															

Table 3.4-6 Running status display example
(Synchronous motor assigned to motor 4, motor running under vector control with sensor)

LED No.		LED 4				LED 3				LED 2				LED 1			
Bit		15	14	13	12	11	10	9	8	7	6	5	4	3	2	1	0
Symbol		-				-				-	-	-		-			
Display example	Binary	1	0	0	0	0	0	0	0	0	0	1	1	0	1	1	0
	Hexadecimal on the LED monitor	LED5 LED4 LED3 LED2 LED1 8.8.0.3.8.															

■ **Hexadecimal expression**

A 4-bit binary number can be expressed in hexadecimal format (hexadecimal digit). The Table 3.4-7 below shows the correspondence between the two notations.

Table 3.4-7 Binary and hexadecimal conversion

Binary				Hexadecimal	Binary				Hexadecimal
0	0	0	0	0	1	0	0	0	8
0	0	0	1	1	1	0	0	1	9
0	0	1	0	2	1	0	1	0	A
0	0	1	1	3	1	0	1	1	b
0	1	0	0	4	1	1	0	0	c
0	1	0	1	5	1	1	0	1	d
0	1	1	0	6	1	1	1	0	E
0	1	1	1	7	1	1	1	1	F

3.4.4 Checking I/O signal status "I/O Checking: 4. io"

Using menu number 4 "I/O Checking: 4. io" displays the I/O status of external signals including digital and analog I/O signals without using a measuring instrument. External signals that can be displayed are digital input/output signals and analog input/output signals.

Table 3.4-8 shows "I/O Checking" items, and Fig. 3.4-2 below shows "I/O Checking" menu transition.
The monitor number and symbol are displayed alternately every 1 second.

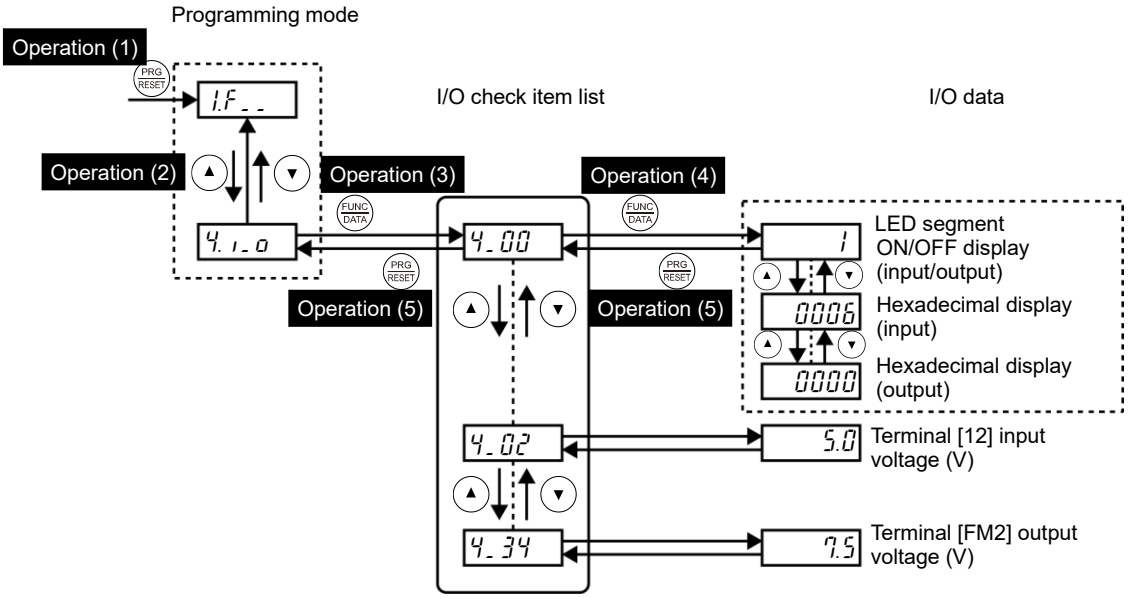

Fig. 3.4-2 "I/O Checking" menu transition

Basic key operation

Operation (1) Turn the inverter ON. It automatically enters Running mode in which you press the PRG/RESET key to switch to Programming mode. The function selection menu appears.

Operation (2) Use the ▲ and ▼ keys to select "I/O Checking" (4. I_O).
Press the ▶ key to skip in menu number units.

Operation (3) Press the FUNC/DATA key to proceed to a list of I/O checking items (e.g., 4_00).

Operation (4) Use the ▲ and ▼ keys to display the desired I/O checking item, then press the PRG/RESET key.
Press the ▶ key to skip the to the I/O checking item +10. When the end is reached, the display returns to the beginning of the same function code group.
The corresponding I/O checking data appears. For the item 4_00 or 4_01, using the ▲ and ▼ keys switches the display method between the segment display (for external signal information in Table 3.4-9) and hexadecimal display (for I/O signal status in Table 3.4-10).

Operation (5) Press the PRG/RESET key to return to the list of I/O checking items. Press the PRG/RESET key again to return to the menu.

Table 3.4-8 “I/O Checking” items

Monitor No.	Symbol	Item	Unit	Description
4_00	dio.t	I/O signals on the control circuit terminals	-	Displays the ON/OFF state of the digital I/O terminals. Refer to “Displaying control I/O signal terminals” on the next page for details.
4_01	dio.L	I/O signals on the control circuit terminals under communications control	-	Displays the ON/OFF state of the digital I/O terminals that received a command via RS-485 or field bus option. Refer to “Displaying control I/O signal terminals” and “Displaying control I/O signal terminals under communications control” from the next page onward for the display content.
4_02	12-in	Input voltage on terminal [12]	V	Displays the input voltage (with sign) on terminal [12] in volts (V). (with sign)
4_03	C1-in	Input current on terminal [C1] (C1 function)	mA	Displays the input current on terminal [C1] (C1 function) in milliamperes (mA).
4_04	FM1.U	Terminal [FM1] output voltage	V	Displays the output voltage for terminal [FM1] in volts (V). (with sign)
4_05	FMP.U	Output voltage on terminal [FMP]	V	Displays the output voltage for terminal [FMP] in volts (V).
4_06	FMP.P	Output frequency on terminal [FMP]	p/s	Displays the output pulse rate per unit of time on terminal [FMP] in (p/s).
4_07	U2-in	Input voltage on terminal [V2]	V	Displays the input voltage (with sign) on terminal [V2] in volts (V).
4_08	FM1.i	Output current on terminal [FM1]	mA	Displays the output current on terminal [FM1] in milliamperes (mA).
4_09	FM2.i	Output current on terminal [FM2]	mA	Displays the output current on terminal [FM2] in milliamperes (mA).
4_10	dio.oP	Option control circuit terminal (I/O)	-	Displays the ON/OFF state of the digital input/output terminals for the digital interface card (option). Refer to “Displaying control I/O signal terminals on optional digital interface cards” for the display content.
4_11	PULSE	Terminal [X6] and [X7] pulse input monitor	-	Displays the number of pulse train signal pulses input to terminals [X6] and [X7].
4_13	Pt.Ch1	PT detected temperature (Ch.1)	°C	Displays the PT option Ch.1 temperature in (°C).
4_14	Pt.Ch2	PT detected temperature (Ch.2)	°C	Displays the PT option Ch.2 temperature in (°C).
4_15	PG.P1	PG pulse rate (AB-phase signals from the reference PG)	kp/s	Displays the AB-phase pulse rate (kp/s) at the Ch1 (XA, XB terminal) side PG.
4_16	PG.Z1	PG pulse rate (Z-phase signal from the reference PG)	p/s	Displays the Z-phase pulse rate (p/s) at the Ch1 (XZ terminal) side PG.
4_17	PG.P2	PG pulse rate (AB-phase signals from the slave PG)	kp/s	Displays the AB-phase pulse rate (kp/s) at the Ch2 (YA, YB terminals) side PG.
4_18	PG.Z2	PG pulse rate (Z-phase signal from the slave PG)	p/s	Displays the Z-phase pulse rate (p/s) at the Ch2 (YZ terminal) side PG.

Monitor No.	Symbol	Item	Unit	Description
4_20	32-in	Input voltage on terminal [32]	V	Displays the input voltage on terminal [32] on the analog interface card (AIO option) in volts (V).
4_21	C2-in	Input current on terminal [C2]	mA	Displays the input current on terminal [C2] on the analog interface card (AIO option) in milliamperes (mA).
4_22	Ao.U	Output voltage on terminal [AO]	V	Displays the output voltage on terminal [AO] on the analog interface card (AIO option) in volts (V).
4_23	CS.i	Output current on terminal [CS]	mA	Displays the output current on terminal [CS] on the analog interface card (AIO option) in milliamperes (mA).
4_24	CL-tM	Customizable logic timer monitor	-	Monitors the timer or counter value in the customizable logic specified by U91.
4_33	U3-in	Terminal [C1] (V3 function) input voltage	V	Displays the input voltage for terminal [C1] (V3 function) in volts (V). (with sign)
4_34	FM2.U	Terminal [FM2] output voltage	V	Displays the output voltage for terminal [FM2] in volts (V). (with sign)
4_35	CS2.i	Option terminal [CS2] output current	mA	Displays the output current (mA) for terminal [CS2] on the analog interface card (option).
4_36	Pntc	PTC/NTC terminal input voltage	V	Displays the input voltage for terminal [V2] (PTC/NTC function) in volts (V).

■ Displaying control I/O signal terminals

The status of control I/O signal terminals can be displayed in two ways: with ON/OFF of each LED segment and in hexadecimal.

● Displaying the I/O signal status with ON/OFF of each LED segment

As shown in Table 3.4-9 below and the figure below, each of segments “a” to “dp” on LED1 and LED2 light up when the corresponding digital input terminal circuit ([FWD], [REV], [X1] to [X9], [EN1] and [EN2]) is closed (ON); it goes OFF when it is open (OFF). Segments “a” to “e” on LED3 light up when the circuit between output terminal [Y1] to [Y4] and terminal [CMY], and between [Y5A] and [Y5C] is closed, respectively; it goes OFF when the circuit is open. Segment “a” on LED4 is for terminals [30A/B/C]. This segment lights up when [30C] is short-circuited with [30A], and goes OFF when the circuit is open.

Tip If all terminal signals are OFF (open), segment “g” on all segments (LED1 to LED5) will light up (“- - - - -”).

Table 3.4-9 Display of I/O signal status with ON/OFF of each LED segment

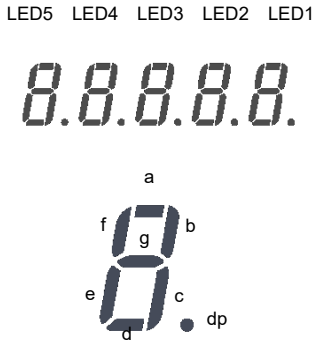

Segment	LED4	LED 3	LED 2	LED 1
a	[30A/B/C]	[Y1-CMY]	[X7]	[FWD]
b	-	[Y2-CMY]	[X8]	[REV]
c	-	[Y3-CMY]	[X9]	[X1]
d	-	[Y4-CMY]	[EN1]	[X2]
e	-	[Y5A-Y5C]	[EN2]	[X3]
f	-	-	(XF) *	[X4]
g	-	-	(XR) *	[X5]
dp	-	-	(RST) *	[X6]

–: No corresponding control circuit terminal exists.

* (XF), (XR), and (RST) are assigned for communications control. Refer to “Displaying control I/O signal terminals under communications control” on the next page.

● Displaying I/O signal status in hexadecimal notation

Each I/O terminal is assigned to 16-digit binary bit 0 to bit 15. Unassigned bits are interpreted as “0.” Allocated bit data is displayed on the LED monitor as four hexadecimal digits (0 to F).

On the FRENIC-MEGA, digital input terminals [FWD] and [REV] are assigned to bits 0 and 1, respectively, and terminals [X1] to [X9] are assigned to bits 2 to 6. The bit is set to “1” when the corresponding input terminal is short-circuited (ON), and it is set to “0” when the terminal is open (OFF). For example, when [FWD] and [X1] are ON (short-circuited) and all the others are OFF (open), 00005 is displayed on LED5 to LED1.

Digital output terminals [Y1] to [Y4] are assigned to bits 0 to 3. Each bit is set to “1” when the circuit between [Y1] to [Y4] and [CMY] is short-circuited (ON), and “0” when it is open (OFF). The status of contact output terminals [30A/B/C] and [Y5A/C] is assigned to bits 8 and 9. It is set to “1” when the circuit between [30A] and [30C] is closed, and “0” when the circuit between [30A] and [30C] is open. For example, if [Y1] is ON, [Y2] is OFF, and the circuit between [30A] and [30C] is closed, “0010 1” is displayed on LED5 to LED1.

The terminals assigned to bits 0 to 15 and Display of I/O signal status in hexadecimal notation (example) are shown in Table 3.4-10.

Table 3.4-10 Display of I/O signal status in hexadecimal notation (example)

LED No.		LED 4				LED 3				LED 2				LED 1			
Bit		15	14	13	12	11	10	9	8	7	6	5	4	3	2	1	0
Input terminal		(RST) *	(XR) *	(XF) *	EN2	EN1	X9	X8	X7	X6	X5	X4	X3	X2	X1	REV	FWD
Output terminal		-	-	-	-	-	-	-	30A/ B/C	-	-	-	Y5A /C	Y4	Y3	Y2	Y1
Example	Binary	0	0	0	0	0	0	0	0	0	0	0	0	0	1	0	1
	Hexadecimal on the LED monitor	LED5 LED4 LED3 LED2 LED1															

–: No corresponding control circuit terminal exists.

* (XF), (XR), and (RST) are assigned for communications control. Refer to "Displaying control I/O signal terminals under communications control" given below.

■ Displaying control I/O signal terminals under communications control

Under communications control, input commands (function code S06) sent via RS-485 or other optional communications can be displayed in two ways: "with ON/OFF of each LED segment" and "in hexadecimal." The content to be displayed is basically the same as that for the control I/O signal terminal status display; however, (XF), (XR), and (RST) are added as inputs. Note that under communications control, the I/O display is in normal logic (using the original signals not inverted)

📖 For details about input commands sent through the communications link, refer to the "RS-485 Communication User's Manual" or the instruction manual of communication-related options as well.

■ Displaying control I/O signal terminals on optional digital interface cards

The LED monitor can also show the signal status of the terminals on the optional digital interface cards, same as the signal status of the control circuit terminals.

The following table lists the assignment of digital I/O signals to the LED segments.

Table 3.4-11 Display of I/O Signal Status with ON/OFF of each LED segment
(Digital interface cards)

LED5 LED4 LED3 LED2 LED1

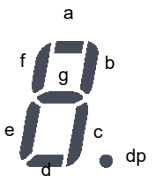

Segment	LED4	LED 3	LED 2	LED 1
a	-	O1	I9	I1
b	-	O2	I10	I2
c	-	O3	I11	I3
d	-	O4	I12	I4
e	-	O5	I13	I5
f	-	O6	I14	I6
g	-	O7	I15	I7
dp	-	O8	I16	I8

LED No.	LED 4				LED 3				LED 2				LED 1			
Bit	15	14	13	12	11	10	9	8	7	6	5	4	3	2	1	0
Input terminal	I16	I15	I14	I13	I12	I11	I10	I9	I8	I7	I6	I5	I4	I3	I2	I1
Output terminal	-	-	-	-	-	-	-	-	O8	O7	O6	O5	O4	O3	O2	O1

3.4.5 Reading maintenance information "Maintenance Information: 5.CHE"

Menu number 5 "Maintenance Information: 5.CHE" contains information necessary for performing maintenance on the inverter. The menu transition in "Maintenance Information" is same as that in Menu #3 "Drive Monitoring." (Refer to Section 3.4.3 .)

The monitor number and symbol are displayed alternately every 1 second.

Basic key operation

(1) Turn the inverter ON. It automatically enters Running mode in which you press the PRG/RESET key to switch to Programming mode. The function selection menu appears.

(2) Use the ▲ and ▼ keys to display "Maintenance Information" (5.CHE).
Press the M/▶ key to skip in menu number units.

(3) Press the FUNC/DATA key to proceed to the list of maintenance items (e.g., 5_00).

(4) Use the ▲ and ▼ keys to display the desired maintenance item, then press the FUNC/DATA key.
The data of the corresponding maintenance item appears.
Press the M/▶ key to skip to maintenance information +10. When the end is reached, the display returns to the first maintenance item.

(5) Press the PRG/RESET key to return to the list of maintenance items. Press the PRG/RESET key again to return to the menu.

Table 3.4-12 "Maintenance Information" display items

Monitor No.	Symbol	Item	Displayed content
5_00	t_ME	Cumulative run time	Displays the content of the cumulative power-ON time counter of the inverter. Counter range: 0 to 65,535 hours When the count exceeds 65,535, the counter will be reset to "0" and start over again.
5_01	Edc	DC link bus voltage	Displays the DC link bus voltage of the inverter main circuit. Unit: V (volts)
5_02	t_MAX	Max. temperature inside the inverter	Displays the maximum temperature inside the inverter for every hour. Unit: °C (Temperatures below 20 °C are displayed as 20 °C.)
5_03	tF.MAX	Max. temperature of heat sink	Displays the maximum temperature of the inverter heat sink for every hour. Unit: °C (Temperatures below 20 ºC are displayed as 20 ºC.)
5_04	i.MAX	Max. effective output current	Displays the maximum current in RMS for every hour. Unit: A (amperes)
5_05	CAP	Capacitance of the DC link bus capacitor	Displays the current capacitance of the DC link bus capacitor (reservoir capacitor) in %, based on the capacitance when shipping as 100%. Refer to Chapter 7 MAINTENANCE AND INSPECTION for details. Display: %

Table 3.4-12 “Maintenance Information” display items (cont.)

Monitor No.	Symbol	Item	Displayed content
5_06	tn.Pb.C	Cumulative run time of electrolytic capacitors on the printed circuit boards	Displays the content of the cumulative run time counter of the electrolytic capacitors on the printed circuit boards, which is calculated by multiplying the cumulative run time count by the coefficient based on the surrounding temperature condition. Counter range: 0 to 99,990 hours Display range: 0 to 99990 When the count exceeds 99,990 hours, the counter stops and the LED monitor remains at 99990.
5_07	tn.FAn	Cumulative run time of cooling fan	Displays the content of the cumulative run time counter of the cooling fan. This counter does not work when the cooling fan ON/OFF control (function code H06) is enabled and the fan stops. The display method is the same as for 5_06 above.
5_08	no.M1	Startup count for motor 1	Displays the content of the motor 1 startup counter (i.e., the number of run commands issued). Counter range: 0 to 65,535 times Display range: 0 to 65535 When the count exceeds 65,535 times, the counter will be reset to “0” and start over again.
5_09	WH	Input watt-hour	Displays the input watt-hour for the inverter. Display range: 0.001 to 9999 Display value = integral power consumption (kWh) x 0.01 To reset the integrated input watt-hour and its data, set function code E51 to “0.000.” When the input watt-hour exceeds 999,900 kWh, the counter will be reset to “0.”
5_10	P.dAt	Input watt-hour data	Displays the value expressed by “input watt-hour (kWh) x function code E51 The function code E51 setting range is 0.000 to 9,999. Unit: None (Display range: 0.001 to 9999. The count cannot exceed 9999. (Fixed at 9999)) Depending on the value of integrated input watt-hour data, the decimal point on the LED monitor shifts to show it within the LED monitors’ resolution. To reset the integrated input watt-hour data, set function code E51 to “0.000.”
5_11	ch1.nE	Number of RS-485 communications errors (COM port 1)	Displays the total number of errors that have occurred in RS-485 communication (COM port 1, connection to keypad) after the power is turned ON. Once the count exceeds 9999, the counter will be reset to “0.”
5_12	ch1.Er	Content of RS-485 communications error (COM port 1)	Displays the latest error that has occurred in RS-485 communication (COM port 1) in decimal. For error contents, refer to the “RS-485 Communication User’s Manual.”
5_13	oPA.nE	Number of option A errors	Displays the total number of errors that have occurred in the option installed in the A-Port. Once the count exceeds 9999, the counter will be reset to “0.”
5_14	nA in	Inverter ROM version	Displays the inverter's ROM version as a 4-digit code.

Table 3.4-12 “Maintenance Information” display items (cont.)

Monitor No.	Symbol	Item	Displayed content
S_16	PEYPd	Keypad ROM version	Displays the keypad ROM version as a 4-digit code.
S_17	ch2.nE	Number of RS-485 communications errors (COM port 2)	Displays the total number of errors that have occurred in RS-485 communication (COM port 2, connection to terminal block) after the power is turned ON. Once the count exceeds 9999, the counter will be reset to “0.”
S_18	ch2.Er	Content of RS-485 communications error (COM port 2)	Displays the latest error that has occurred in RS-485 communication (COM port 2, connection to terminal block) in decimal. For error contents, refer to the “RS-485 Communication User’s Manual.”
S_19	oP-A	Option ROM version 1	Displays the version of the optional ROM installed in the A-Port in 4 digits. If the option has no ROM, “- - - - -” appears on the LED monitor.
S_20	oP-b	Option ROM version 2	Displays the version of the optional ROM installed in the B-Port in 4 digits. If the option has no ROM, “- - - - -” appears on the LED monitor.
S_21	oP-C	Option ROM version 3	Displays the version of the optional ROM installed in the C-Port in 4 digits. If the option has no ROM, “- - - - -” appears on the LED monitor.
S_23	tM.M1	Cumulative run time for motor 1	Displays the content of the cumulative power-ON time counter for motor 1. Counter range: 0 to 99,990 hours Display range: 0 to 99990 When the count exceeds 99,990 hours, the counter will be reset to “0” and start over again.
S_24	t-int	Temperature inside the inverter (real-time value)	Displays the current temperature inside the inverter. Unit: °C
S_25	t-Fin	Temperature of heat sink (real-time value)	Displays the current temperature of the inverter heat sink. Unit: °C
S_26	tM.CAP	Lifetime of DC link bus capacitor (elapsed hours)	Displays the cumulative time during which a voltage is applied to the DC link bus capacitor. When the main power is shut down, the inverter automatically measures the discharging time of the DC link bus capacitor and corrects the elapsed time. The display method is the same as for S_06 above.
S_27	rt.CAP	Service life of DC link bus capacitor (remaining time)	Displays the remaining lifetime of the DC link bus electrolytic capacitor, which is estimated by subtracting the elapsed time from the lifetime (10 years). The display method is the same as for S_06 above.
S_28	tM.M2	Cumulative run time for motor 2	Displays the content of the cumulative power-ON time counter of motor 2. The display method is the same as for S_23 above.

Table 3.4-12 “Maintenance Information” display items (cont.)

Monitor No.	Symbol	Item	Displayed content
S_29	tM.M3	Cumulative run time for motor 3	Displays the content of the cumulative power-ON time counter of motor 3. The display method is the same as for S_23 above.
S_30	tM.M4	Cumulative run time for motor 4	Displays the content of the cumulative power-ON time counter of motor 4. The display method is the same as for S_23 above.
S_31	rt.M1	Remaining hours before the next maintenance 1	Displays the hours remaining before the next maintenance, which is estimated by subtracting the cumulative run time of motor 1 from the maintenance interval specified by H78. (This function applies to motor 1 only.) Display range: 0 to 99990
S_32	no.M2	Startup count for motor 2	Displays the content of the motor 2 startup counter (i.e., the number of run commands issued). The display method is the same as for S_08 above.
S_33	no.M3	Startup count for motor 3	Displays the content of the motor 3 startup counter (i.e., the number of run commands issued). The display method is the same as for S_08 above.
S_34	no.M4	Startup count for motor 4	Displays the content of the motor 4 startup counter (i.e., the number of run commands issued). The display method is the same as for S_08 above.
S_35	rno.M1	Remaining startup times before the next maintenance 1	Displays the number of startups remaining until the next maintenance, which is estimated by subtracting the number of startups from the preset startup count for maintenance specified by H79. (This function applies to motor 1 only.) The display method is the same as for S_08 above.
S_36	LALM1	Warning factor (Latest)	Displays the factor of the latest warning as an alarm code. For details, refer to Chapter 6 “6.1 Protective Functions.”
S_37	LALM2	Warning factor (Last)	Displays the factor of the last warning as an alarm code. For details, refer to Chapter 6 “6.1 Protective Functions”.
S_38	LALM3	Warning factor (2nd last)	
S_39	LALM4	Warning factor (3rd last)	
S_40	oPA.Er	Option A error content	Displays the content of errors that have occurred in the option installed in the A-Port.
S_41	oPb.nE	Number of option B errors	Displays the total number of errors that have occurred in the option installed in the B-Port. Once the count exceeds 9999, the counter will be reset to “0.”
S_42	oPb.Er	Option B error content	Displays the content of errors that have occurred in the option installed in the B-Port.
S_43	oPC.nE	Number of option C errors	Displays the total number of errors that have occurred in the option installed in the C-Port. Once the count exceeds 9999, the counter will be reset to “0.”
S_44	oPC.Er	Option C error content	Displays the content of errors that have occurred in the option installed in the C-Port.

Table 3.4-12 “Maintenance Information” display items (cont.)

Monitor No.	Symbol	Item	Displayed content
5.47	oPA.id	Option A type	Displays the type of option installed in the A-Port. See Table 3.4-13 for the display content.
5.48	oPb.id	Option B type	Displays the type of option installed in the B-Port. See Table 3.4-13 for the displayed content.
5.49	oPC.id	Option C type	Displays the type of option installed in the C-Port. See Table 3.4-13 for the displayed content.
5.50	rEG.M	Maximum regenerative load factor value	Displays the maximum value when the 5.51 inverter power is ON. The value returns to 0 when the inverter power is turned OFF.
5.51	rEG	Regenerative load factor	Displays the regenerative load factor in 100 s intervals. The value is calculated and updated every 100 s while the inverter power is ON.
5.52	db.on.M	Maximum braking resistor operation frequency value	Displays the maximum value when the 5.53 inverter power is ON. The value returns to 0 when the inverter power is turned OFF.
5.53	db.on	Braking resistor operation frequency	Displays the braking resistor operation frequency (time ratio) in 100 s intervals. The value is calculated and updated every 100 s while the inverter power is ON.
5.54	thr.db	Breaking resistor thermal overload relay operation value	Displays the thermal overload relay operation value percentage at the current time. A dbH alarm occurs at 100%.
5.55	thr.tr	Inverter thermal overload relay operation value 1	Displays the IGBT junction temperature operation value 1 percentage at the current time. An OLU alarm occurs at 100%.
5.56	thr.PC	Inverter thermal overload relay operation value 2	Displays the IGBT junction temperature operation value 2 percentage at the current time. An OLU alarm occurs at 100%.
5.57	thr.73	Inverter thermal overload relay operation value 3	Displays the calculated 73 contactor thermal overload relay operation value at the current time. An OLU alarm occurs at 100%.
5.58	iGbt	IGBT life expectancy	Estimates the IGBT life expectancy from changes in IGBT temperature, and displays the remaining times as a percentage. Can be displayed/output as warning iGb or L iF. A warning occurs if less than 10%. Display range: 0 to 100 %
5.59	iP ⇔ Addr	IP address	Displays the: · IP address (iPAddr) · Subnet mask (Subnt MASK) · Default gateway (dEFLt GtWAY) when connecting with Ethernet (when equipped with OPC-ETM (option). Changes 4-digit numerical characters with the ▲ / ▼ keys.
5.60	SubnE ⇔ MASK	Subnet mask	
5.61	dEFLt⇔ GtWAY	Default gateway	

Table 3.4-12 “Maintenance Information” display items (cont.)

Support for monitor No. 5.64 onward is possible with ROM0500 or later.

Monitor No.	Symbol	Item	Displayed content
5.64	LALM5	Warning factor (4th last)	Displays the factor of the 4th last and 5th last errors as alarm codes. For details, refer to Chapter 6 “6.1 Protective Functions.”
5.65	LALM6	Warning factor (5th last)	
5.66	rY0n1	Max. cumulative relay ON count (Y1RY, Y2RY)	Displays the greater number of times that the relay turned ON between that for relay output Y1RY (E20/o23) and relay output Y2RY (E21/o24) on option card OPC-RY with a value of 0.000 to 1000.0. (1.000 indicates 1,000 times.)
5.67	rY0n2	Max. cumulative relay ON count (Y3RY, Y4RY)	Displays the greater number of times that the relay turned ON between that for relay output Y3RY (E22/o25) and relay output Y4RY (E23/o26) on option card OPC-RY with a value of 0.000 to 1000.0. (1.000 indicates 1,000 times.)
5.68	rY0n3	Max. cumulative relay ON count (Y5A, 30ABC)	Displays the greater number of times that the relay turned ON between that for inverter unit relay output Y5A (E24) and 30ABC (E27) with a value of 0.000 to 1000.0. (1.000 indicates 1,000 times.)
5.69	rY0n4	Max. cumulative relay ON count (Y6RY to Y12RY)	Displays the greater number of times that the relay turned ON between that for relay output Y6RY to Y12RY (o01 to o07) on option card OPC-RY2 with a value of 0.000 to 1000.0. (1.000 indicates 1,000 times.)

Table 3.4-13 Option type display list

Displayed content	Option type
- - - -	Not connected
PG	OPC-PG
PG2.3	OPC-PG2
PMPG	OPC-PMPG2 / OPC-PG22
di	OPC-DI
do	OPC-DO
ry2	OPC-RY2 *101
Aio	OPC-AIO
Ao	OPC-AO *101
Pt	OPC-PT *101
PdP	OPC-PDP2
dEU	OPC-DEV
CoP	OPC-COP2
CCL	OPC-CCL
tL	OPC-TL
SX	OPC-SX
EtM	OPC-ETM *100

*100 Supported with ROM0300 or later.

*101 Supported with ROM0500 or later.

3.4.6 Reading alarm information "Alarm Information: 6.AL"

Menu number 6 "Alarm Information: 6.AL" shows the causes of the past 4 alarms (past 10 for ROM0500 and later, number of consecutive occurrences only displayed for 5th to 10th) with an alarm code. Further, it is also possible to display alarm information that indicates the status of the inverter when the alarm occurred. Fig. 3.4-3 lists " "Alarm Information" menu transition". The menu transition in "Table 3.4-14" is shown in "Alarm Information" display content.

The date on which alarms occurred can only be checked using the multi-function Keypad. Refer to the Multi-function Keypad (TP-A2SW) Instruction Manual (INR-SI47-2422) for details.

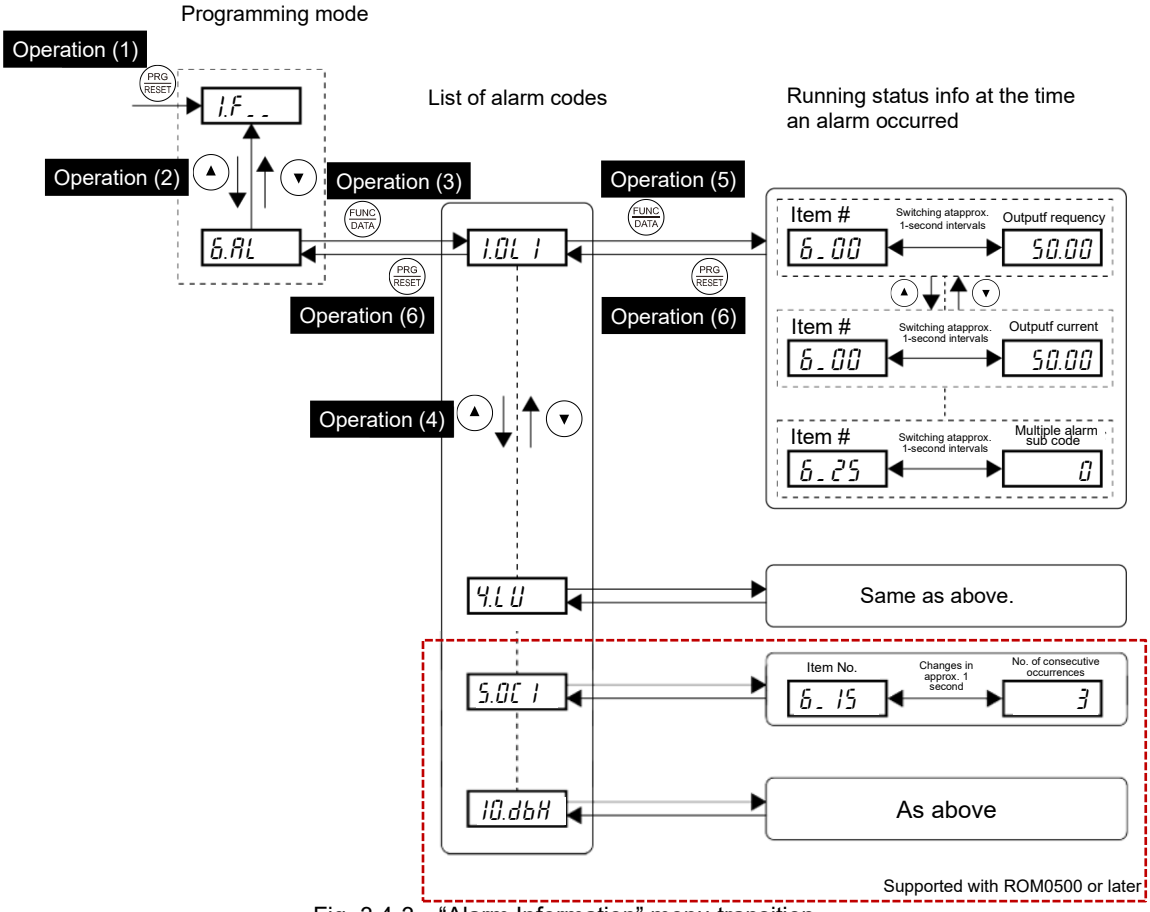

Fig. 3.4-3 "Alarm Information" menu transition

Basic key operation

Operation (1) Turn the inverter ON. It automatically enters Running mode in which you press the PRG RESET key to switch to Programming mode. The function selection menu appears.

Operation (2) Use the ▲ or ▼ key to display "Alarm Information" (6.AL).
Press the M key to skip in menu number units.

Operation (3) Press the FUNC DATA key to proceed to the list of alarm codes (e.g., 1.OL 1).
In the list of alarm codes, the alarm information for the last 10 *101 alarms is saved as an alarm history.

Operation (4) Each time the ▲ or ▼ key is pressed, the last 4 alarms are displayed beginning with the most recent one in the order "1.", "2.", "3.", "4.".
By pressing the M key, the display returns to the latest alarm history.

Operation (5) Press the FUNC DATA key with an alarm code being displayed.
The monitor number (e.g. 6_00) and the inverter status information (e.g. Output frequency) at the time of the alarm occurrence alternately appear at approx. 1-second intervals. Pressing the ▲/▼ keys displays other monitor numbers (e.g., 6_01) and the status information (e.g., Output current) for that alarm code.
By pressing the FUNC DATA key at this time, the display can be switched between the monitor number and symbol.

Operation (6) Press the PRG RESET key to return to the list of alarm codes. Press the PRG RESET key again to return to the menu.

*101 Supported with ROM0500 or later.

Table 3.4-14 “Alarm Information” display content

Monitor No.	Symbol	Displayed content	Description
6.00	Fout1	Output frequency	Output frequency before slip compensation when alarm occurred
6.01	iout	Output current	Output current when alarm occurred. Unit: A (amperes)
6.02	Uout	Output voltage	Output voltage when alarm occurred Unit: V (volts)
6.03	trq	Calculated motor output torque	Calculated motor output torque when alarm occurred
6.04	FrEF	Frequency specified by frequency command	Frequency specified by frequency command when alarm occurred
6.05	rot	Rotation direction	Displays the current rotation direction when alarm occurred. F: forward, r: reverse, -----: stop
6.06	StAt1	Running status	Running status in 4-digit hexadecimal format. Refer to “Displaying running status (3.07) and running status 2 (3.23)” in “3.4.3 Monitoring the running status “Drive Monitoring: 3.oPE”” for details.
6.07	tiME	Cumulative run time	Displays the content of the cumulative power-ON time counter of the inverter when alarm occurred. Counter range: 0 to 65,535 hours Display range: 0 to 65535 When the count exceeds 65,535, the counter will be reset to “0” and start over again.
6.08	no.St	Number of startups	Displays the content of the motor startup counter (i.e., the number of run commands issued) when alarm occurred. Counter range: 0 to 65,535 times Display range: 0 to 65535 When the count exceeds 65,535, the counter will be reset to “0” and start over again.
6.09	Edc	DC link bus voltage	Displays the DC link bus voltage of the inverter main circuit. Unit: V (volts)
6.10	t-int	Temperature inside the inverter	Displays the temperature of the inverter heat sink when alarm occurred. Unit: °C
6.11	t-fin	Max. temperature of heat sink	Displays the temperature of the inverter heat sink when alarm occurred. Unit: °C

Table 3.4-14 “Alarm Information” display content (cont.)

Monitor No.	Symbol	Displayed content	Description
6_12	dio	Terminal I/O signal status (displayed with ON/OFF of LED segments)	Refer to “Table 3.4-9 Display of I/O signal status with ON/OFF of each LED segment” and “Table 3.4-10 Display of I/O signal status in hexadecimal notation (example)” in “3.4.4 Checking I/O signal status “I/O Checking: 4.io ””.
6_13	di-H	Terminal input signal status (in hexadecimal)	
6_14	do-H	Terminal output signal status (in hexadecimal)	
6_15	no.AL	No. of consecutive occurrences	Shows how many times the same alarm has occurred consecutively.
6_16	o.LAP1	Multiple alarm 1	Simultaneously occurring alarm code (1) (“ ---” is displayed if no alarm has occurred.)
6_17	o.LAP2	Multiple alarm 2	Simultaneously occurring alarm code (2) (“ ---” is displayed if no alarm has occurred.)
6_18	dio.L	Terminal I/O signal status under communications control (displayed with the ON/OFF of LED segments)	Displays the ON/OFF state of the digital I/O terminals under RS-485 communications control when alarm occurred. Refer to “Displaying control I/O signal terminals under communications control” in “3.4.4 Checking I/O signal status “I/O Checking: 4.io ”” for the display content.
6_19	di.L-H	Terminal input signal status under communications control (in hexadecimal)	
6_20	do.L-H	Terminal output signal status under communications control (in hexadecimal)	
6_21	Sub	Error sub code	Secondary error code for an alarm.
6_22	StAt2	Running status 2	Displays running status 2 in 5-digit hexadecimal format. Refer to "Table 3.4-4 Running status 2 (3_23) bit assignment" in “3.4.3 Monitoring the running status “Drive Monitoring: 3.oPE ”” for details.
6_23	SPEEd	Detected value	Displays the detected speed value with a 5-digit hexadecimal number. The speed + 100% is expressed as the standard value + 20000 (h.4E20). <table><tr><th>Display xample</th><th>Decimal</th><th>Speed%</th><th>Rotation direction</th></tr><tr><td>h.4E20</td><td>+20000</td><td>+100%</td><td>Forward rotation</td></tr><tr><td>h.0000</td><td>0</td><td>0%</td><td>Stop</td></tr><tr><td>h.FF38</td><td>-200</td><td>-0.01%</td><td rowspan="2">Reverse rotation</td></tr><tr><td>h.b1E0</td><td>-20000</td><td>-100%</td></tr></table>
6_24	StAt3	Running status 3	Displays running status 3 in 5-digit hexadecimal format. Refer to “Table 3.4-15 Running Status 3 (6_24) bit assignment” below for details.
6_25	Sub.o1	Multiple alarm sub code	Secondary error code for a multiple alarm

Note When the same alarm occurs repeatedly in succession, the alarm information for the first and the most recent occurrences will be preserved and the information for other occurrences in-between will be discarded. The number of consecutive occurrences will be preserved as the first alarm information.

Table 3.4-15 Running Status 3 (6_24) bit assignment

Bit	Symbol	Content	Bit	Symbol	Content
15	-	Always “0.”	7	FAN	“1” when the fan is in operation.
14	ID2	“1” when current 2 is detected.	6	KP	1 when keypad operation being performed
13	IDL	“1” when low current is detected.	5	OL	“1” when a motor overload early warning is issued.
12	ID	“1” when current is detected.	4	IPF	“1” during auto-restarting after momentary power failure.
11	OLP	“1” under overload prevention control.	3	SWM2	“1” when motor 2 is selected.
10	LIFE	“1” when a lifetime early warning is issued.	2	RDY	“1” when the inverter is ready to run.
9	OH	“1” when a heat sink overheat early warning is issued.	1	FDT	“1” when frequency is detected.
8	TRY	“1” during auto-resetting.	0	FAR	“1” when a frequency arrival signal is issued.

3.4.7 Copying data "Data Copying: 7.CPY"

Data copying is used when reading function code data from the inverter and saving it in the TP-E2 keypad or in the multifunction keypad (TP-A2SW), when writing function code data to another inverter, or when comparing function code data saved to the keypad with function code data set in the inverter.

In addition, using menu number 7 allows you to store the running status information in the keypad, detach the keypad from the inverter, connect it to a PC running FRENIC Loader at an office or off-site place, and check the inverter running status without removing the inverter itself.

To store the inverter running status information in the keypad, use "Read data" (rEAd) or "Read inverter running information" (CHEC) function. For details on how to connect the keypad to a PC and check the inverter running status information stored in the keypad, refer to the FRENIC Loader Instruction Manual.

Table 3.4-4 below shows the menu transition in menu number 7 "Data Copying." The TP-E2 keypad can store function code data for a single inverter.

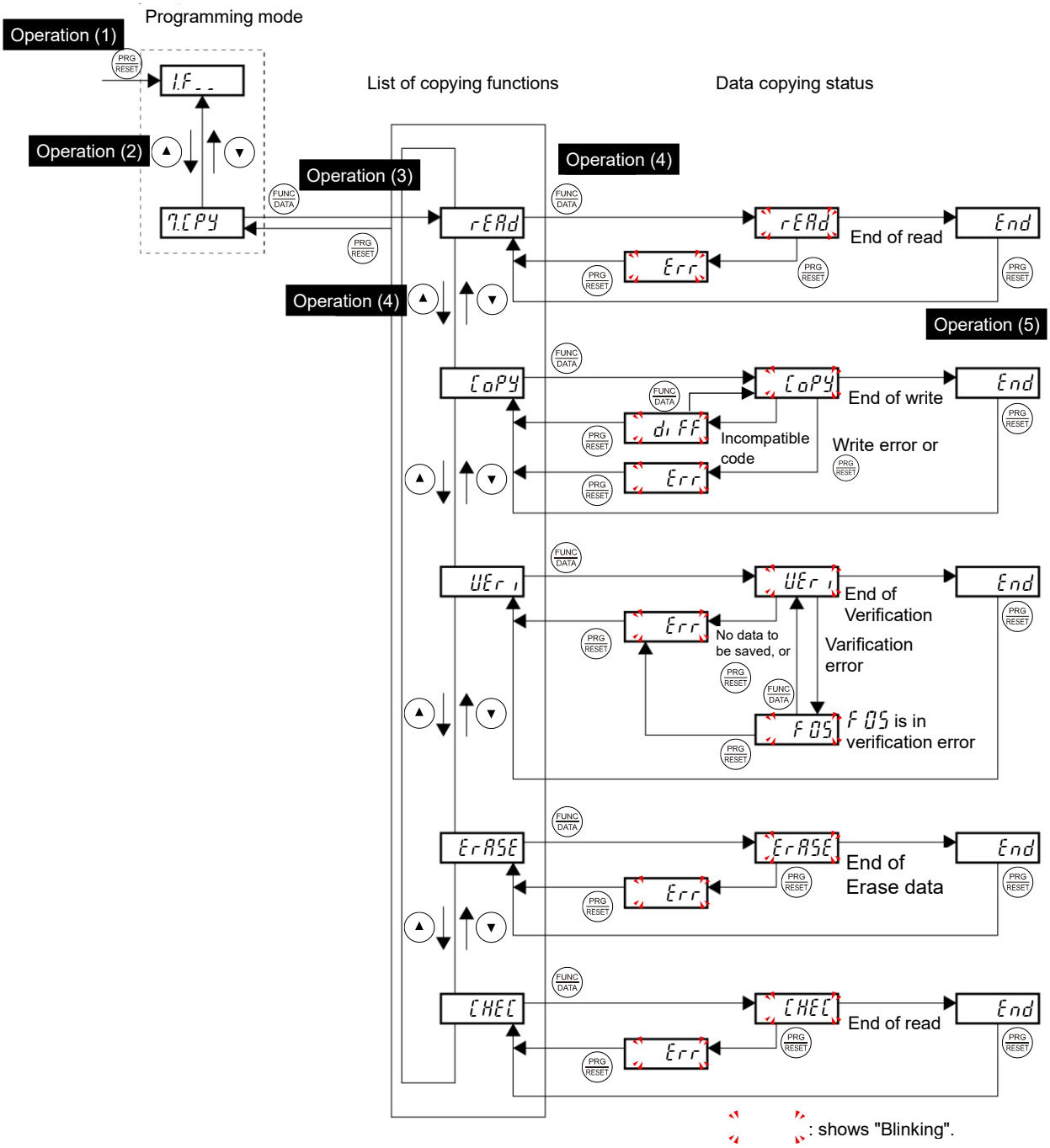

Table 3.4-4 "Data Copying" status transition

If "Err" or "diFF" appears, refer to "■ If unable to copy".

Basic key operation

Operation (1) Turn the inverter ON. It automatically enters Running mode in which you press the PRG/RESET key to switch to Programming mode. The function selection menu appears.

Operation (2) Use the ▲ and ▼ keys to display "Data Copying" (7.CPY).
Press the ▶ key to skip in menu number units.

Operation (3) Press the FUNC/DATA key to proceed to the list of data copying functions (e.g., "rEAd").

Operation (4) Use the ▲ and ▼ keys to select the desired function, then press the FUNC/DATA key to execute the selected function.
(e.g., "rEAd" will blink.)

Operation (5) When the selected function has been completed, "End" appears. Press the PRG/RESET key to return to the list of data copying functions. Press the PRG/RESET key again to return to the menu.

Details on each of the data copy functions using the TP-E2 keypad are shown below.

Table 3.4-16 List of data copying functions

LED indication	Function	Description
rEAd	Read data	Reads the function code data out of the inverter memory and stores it in the keypad memory. Also reads out inverter's current running status information which can be checked by FRENIC Loader, such as information of I/O, system, alarm, and running status. Pressing the PRG/RESET key during a read operation (when "rEAd" is blinking) immediately aborts the operation and displays "Err" (blinking). By canceling, all data stored in the keypad memory is cleared.
CoPY	Write data	Writes data stored in the keypad memory into the inverter memory. If you press the PRG/RESET key during a write operation (when "CoPY" is blinking), the write operation that is under way will be forcibly aborted and "Err" will appear (blinking). Inverter function code data prior to forcibly aborting will be incompletely changed. Do not run the inverter in this condition. Instead, perform initialization or rewrite the entire data. If unable to copy, refer to "■ If unable to copy". If unable to copy, refer to "Reading maintenance information "Maintenance Information: 5.CHE " on page 3-38. When copying is finished, the operation will be automatically verified. Displays the function code that was not been copied when copying in case that the voltage and capacity are different.
UEr 1	Verify data	Verifies (compares) the data stored in the keypad memory with that in the inverter's memory. If any mismatch is detected, the verify operation will be aborted, with the function code that differs displayed blinking. Pressing the FUNC/DATA key again resumes verification from the next function code. Pressing the PRG/RESET key during a verify operation (when "UEr 1" is blinking) immediately aborts the operation and displays "Err" (blinking). "Err" appears blinking also when the keypad does not contain any valid data.
ErASE	Erase data	Clears all data stored in the keypad memory. This does not impact inverter function code data.
CHEC	Read inverter running information	Reads out inverter's current running status information that can be checked by FRENIC Loader, such as information of I/O, system, alarm, and running status, excluding function code data. Use this command when the function code data saved in the keypad should not be overwritten and it is necessary to keep the previous data. Pressing the PRG/RESET key during a read operation (CHEC blinking) immediately aborts the operation and displays "Err" (blinking).

Table 3.4-17 List of data copying functions (cont.)

LED indication	Function	Description
Prot	Enable Data protection	Enables the protection of data stored in the keypad memory. Data cannot be read or erased from the keypad. Data writing, verification, and inverter operating information reading are possible. Upon pressing the FUNC/DATA key the inverter immediately displays "Err".

Tip

If "Err" is blinking, press the PRG/RESET key to cancel.

If "d iFF" is blinking, it is possible to continue by pressing the FUNC/DATA key, but expanded function code data is not changed.

■ **Data protection**

You can protect data saved in the keypad from unexpected modifications. By enabling the data protect function, "rEAd" and "ErASE" in the data copy function list change to "Prot", and data reading and keypad data erasure from the inverter are prohibited.

To enable or disable the data protection, follow the next steps.

(1) Select the "Data Copying" (7.CPY) on the function selection menu in Programming mode.

(2) When "Data Copying" (7.CPY) is displayed, holding the FUNC/DATA key down for at least 5 seconds alternates data protection status between enabled or disabled.

Note

For switching the data protection status, be sure to hold the FUNC/DATA key down for at least 5 seconds. Once the key is released within 5 seconds, press the PRG/RESET key to go back to the 7.CPY display and perform the keying operation again.

- Enabling the disabled data protection

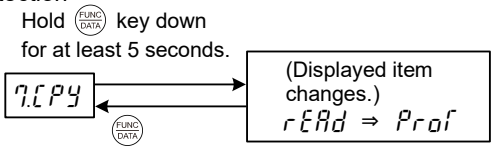

When "Data Copying" (7.CPY) is displayed, holding down the FUNC/DATA key for at least 5 seconds shows "rEAd" for 5 seconds and then switches to "Prot", enabling data protection.

- Disabling the enabled data protection

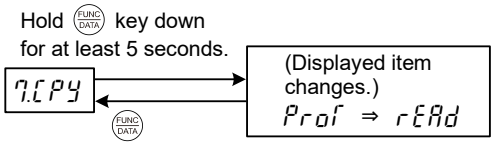

When "Data Copying" (7.CPY) is displayed, holding down the FUNC/DATA key for at least 5 seconds shows "Prot" for 5 seconds and then switches to "rEAd", disabling data protection.

The following are restrictions and special notes concerning “Data Copying.”

■ **If unable to copy**

Check whether the “Err” or “diff” display is blinking.

(1) When the “Err” display is blinking (write error), the following causes are conceivable.

- No data has been saved to the keypad memory. (If data has not been read even once since the product was shipped, or was canceled while data was being read)
- There is a problem with the data saved to the keypad memory.
- The inverter model is different.
- Data was written while the inverter was running.
- Inverter data is protected (function code F00 = 1).
- The permit editing command ***WE-KP*** is OFF.
- Data reading was attempted when data protection was enabled.

(2) When the “diff” display is blinking, the following cause is conceivable.

- If the inverter type is the same:

When writing data from a new ROM version to an inverter with an old ROM version, “diff” appears if there is no data compatibility. (This error does not occur if writing data from an old ROM version to an inverter with a new ROM version.) Copying can be continued by pressing the (FUNC/DATA) key. In this case, data is not copied to added function codes by upgrading, but compatibility is retained and data is copied to existing function codes.

· If the inverter type differs for special specification products, etc.

Data with no compatibility will be copied, and therefore data copying should not be performed.

3.4.8 Checking the status of communication with the host device "Communication monitor: 9.S_ to 9.dAtA"

By using menu number 9 "Communication monitor: 9.S_ to 9.dAtA", it is possible to check the status of communication commands and monitor codes with the host device.

Displayed No.	Item	Display/setting details
9.S_ _	Communication commands (S codes) *1	Displays communication commands (S codes) from the host device. Data can be checked by pressing the (FUNC/DATA) key, displaying the S code number to be checked with the (▲) / (▼) key, and then pressing the (FUNC/DATA) key again. Press the (PRG/RESET) key after checking the data.
9.Addr	Communication monitor (address) *2	Enter the address of the function code to be monitored. Press the (FUNC/DATA) key, enter a hexadecimal number for the address, and then press the (FUNC/DATA) key to set it.
9.dAtA	Communication monitor (data) *3, *4	Displays data for the function code set for "9.Addr". After entering the address in "9.Addr", the display changes from the "9.dAtA" display to data display by pressing the (FUNC/DATA) key. Monitor data can be displayed in hexadecimal data format, or in decimal data format such as integers or fractional values. When (▲) key pressed: Displays hexadecimal data. When (▼) key pressed: Displays decimal data such as integers or fractional values. After checking the data, press the (PRG/RESET) key.

*1 Refer to "Command data" in the RS-485 Communication User's Manual for details.

*2 Refer to "Monitor data 1" in the RS-485 Communication User's Manual for details.

<Address calculation formula>

1) Select the group No. (hexadecimal) for the function code to be monitored from the table below, and enter into the first 2 digits of the address.

Function code	Group No. (hexadecimal)	Function code	Group No. (hexadecimal)
M **	08_H	W3 **	18_H
M1 **	23_H	X **	10_H
W **	$0F_H$	X1 **	19_H
W1 **	16_H	Z **	11_H
W2 **	17_H		

2) Convert the number ** for the function code to be monitored to a hexadecimal number, and enter it into the latter 2 digits of the address.

Example 1: In the case of M10 (power consumption), M code = 08_H, number 10 = $0A_H$ → 080A

Example 2: In the case of W140 (terminal [V3] input voltage), W1 code = 16_H, number 40 = 28_H → 1628

*3 Data display format

To display function code 10 (power consumption) data,

enter the M10 address "080A"(hexadecimal) in 9.Addr. (See *2)

By then pressing the (FUNC/DATA) key at 9.dAtA, "76.54" is displayed. (if power consumption = 76.54%)

By then pressing the (▲) key, "h. 1dE6" is displayed in hexadecimal notation.

By then pressing the (▼) key, the display returns to the "76.54" decimal value.

*4 The hexadecimal display data format differs depending on the function code number.

Refer to "List of data format numbers" in the RS-485 Communication User's Manual.

3.4.9 Setting “Favorites” function code data “Favorites: 0.FnC”

Menu number 0 “Favorites” in Programming mode allows you to display only those function codes in “Favorites”, and make changes to function code data. There is no limit to the number of function code data items that can be registered.

Registering and deleting “Favorites”

By pressing the M/▶ and FUNC/DATA keys simultaneously while the number of the function code to be registered in “Favorites” is displayed in menu number 1 “Data Setting”, the function code data is registered in “Favorites”.

The following example describes the procedure for registering and deleting F01 frequency setting 1 in “Favorites”.

By pressing the M/▶ and FUNC/DATA keys simultaneously while F 01 is displayed, the bar at the top indicating that data has been registered is displayed on the left of the function code. Performing the same operation again deletes the registered data from “Favorites”, and the top bar disappears.

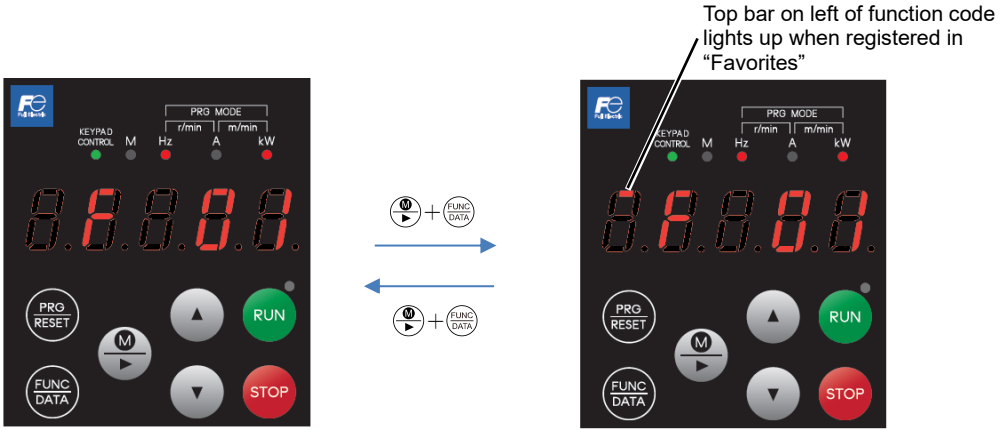

Fig. 3.4-5 Registering and displaying favorites

By copying data with the keypad, function codes registered in favorites can also be copied.

By writing “13” for H03, all registered function codes can be deleted.

3.5 Alarm Mode

If an abnormal condition arises, the protective function is invoked and issues an alarm, then the inverter automatically enters Alarm mode. At the same time, an alarm code appears on the LED monitor.

3.5.1 Releasing the alarm and switching to running mode

Remove the cause of the alarm and press the (PRG RESET) key to release the alarm and return to Running mode. The alarm can be removed using the (PRG RESET) key only when the alarm code is displayed.

3.5.2 Displaying the alarm history

It is possible to display the most recent 3 alarm codes in addition to the one currently displayed. Previous alarm codes can be displayed by pressing the (▲)/(▼) key while the current alarm code is displayed.

3.5.3 Displaying the status of inverter at the time of alarm

When the alarm code is displayed, you may check various running status information when the alarm occurred (output frequency and output current, etc.) by pressing the (FUNC DATA) key. The monitor item number and data for each running status information will be displayed alternately.

Further, you can view various information items on the running status of the inverter using the (▲)/(▼) key. The information displayed is the same as for menu number 6 “Alarm Information” in Programming mode. Refer to Table 3.4-14 in “3.4.6 Reading alarm information “Alarm Information: 6.AL .”

Pressing the (PRG RESET) key while the running status information is displayed returns to the alarm code display.

Note When the running status information is displayed after removal of the alarm cause, pressing the (PRG RESET) key twice returns to the alarm code display and releases the inverter from the alarm state. This means that the motor starts running if a run command has been received by this time.

3.5.4 Switching to programming mode

You can also switch to Programming mode by pressing "(STOP) + (PRG RESET) keys” simultaneously with the alarm displayed, and modify the function code data.

3.6 USB Port

There is a USB cable connection port (miniB) on the front of the keypad. To connect the USB cable, open the connection port cover and connect the cable as shown below.

Connect the inverter directly to a PC with the USB cable. FRENIC Loader allows the user to edit, check, and manage inverter function codes, and perform remote operations such as monitoring data while the inverter is running, and starting and stopping the inverter. The running status and alarms, etc. can also be monitored.

📖 Refer to the “FRENIC Loader Instruction Manual” for details on how to use FRENIC Loader.

Furthermore, the keypad can be temporarily used as memory media. Write the inverter running status to the keypad, disconnect the keypad, and then connect it to a PC with the USB cable at a location other than the workplace such as an office. Function code data and the inverter running status read can be edited, set, and checked with FRENIC Loader.

📖 Refer to section “3.4.7 Copying data “Data Copying: 7.CPY ”” for details on saving data

Chapter 4
TEST RUN PROCEDURE

This chapter describes basic settings required for making a test run.

Contents

4.1 Test Run Procedure Flowchart ····· 4-1
4.2 Checking Prior to Powering On ····· 4-2
4.3 Powering ON and Checking ····· 4-3
4.4 Destination setting ····· 4-4
4.4.1 Overview ····· 4-4
4.4.2 Setting the initial destination ····· 4-5
[1] When using the keypad (TP-E2) ····· 4-5
[2] When using Multi-function keypad (TP-A2SW) ····· 4-5
4.5 Switching the Applicable Motor Rating (HHD/HND/HD/ND Specifications) ····· 4-6
4.6 Selecting the Motor Control Method ····· 4-8
4.6.1 V/f control without slip compensation (induction motors) ····· 4-8
4.6.2 V/f control with slip compensation (induction motors) ····· 4-8
4.6.3 Dynamic torque vector control (induction motors) ····· 4-9
4.6.4 V/f control with sensor (induction motors) ····· 4-9
4.6.5 Dynamic torque vector control with sensor (induction motors) ····· 4-9
4.6.6 Sensorless vector control (induction motors) ····· 4-9
4.6.7 Vector control with sensor (induction motors) ····· 4-10
4.6.8 Sensorless vector control (synchronous motors) ····· 4-10
4.6.9 Vector control with sensor (synchronous motors) ····· 4-11
4.7 Performance Comparison for Drive Controls (Summary) ····· 4-12
4.8 Configuring Function Codes for Drive Controls ····· 4-14
4.8.1 Induction motor operation ····· 4-16
[1] If running the motor with simple V/f control ····· 4-16
[2] If running the motor with V/f control with sensor ····· 4-17
[3] If running the motor with V/f control with slip compensation, dynamic torque vector control, or sensorless vector control ····· 4-19
[4] If running the motor with dynamic torque vector control with sensor or vector control with sensor ····· 4-21
[5] Induction motor tuning method ····· 4-23
4.8.2 Synchronous motor operation ····· 4-26
[1] If running the motor with sensorless vector control (synchronous motors) ····· 4-26

[2] If driving the motor under vector control with sensor (synchronous motors) ····· 4-29
[3] Synchronous motor tuning method ····· 4-35
4.8.3 Motor temperature protection setting ····· 4-39
[1] Electronic thermal overload relay (for motor 1 protection) ····· 4-39
[2] Motor protection with thermistor ····· 4-39
4.9 Setting function codes when switching from a conventional model ····· 4-40
4.9.1 Switching from FRENIC-MEGA (G1S) ····· 4-40
[1] Copying function codes using the keypad ····· 4-40
[2] Entering function codes directly from the keypad ····· 4-40
[3] Entering function codes from PC Loader ····· 4-41
4.9.2 Switching from FRENIC5000G11S/P11S or FRENIC5000G9S/P9S ····· 4-41
4.10 Operation Check ····· 4-42
4.10.1 Test run procedure ····· 4-42
4.10.2 Check points during a test run ····· 4-42
4.10.3 Adjusting the function code for motor control ····· 4-43
4.11 Selecting a Frequency Command Source ····· 4-45
4.11.1 Setting the frequency from the keypad ····· 4-45
4.11.2 Setting the frequency with an external potentiometer (variable resistor) ····· 4-46
4.11.3 Setting the frequency with multistep frequency selection (1 speed, 2 speed, etc.) ····· 4-47
4.12 Selecting a Run Command Source ····· 4-48
4.12.1 Setting run commands from the keypad ····· 4-48
4.12.2 Setting run commands with external signals (terminal [FWD, [REV]) ····· 4-48

4.1 Test Run Procedure Flowchart

Make a test run of the motor using the flowchart given below.

This chapter describes the test run procedure with motor 1 dedicated function codes that are marked with an asterisk (*).

Note When motor 2 to 4 is used, it is necessary to convert to the corresponding function codes.
These function codes are marked with "*."

For the function codes to be converted, see Chapter 5 "FUNCTION CODES."

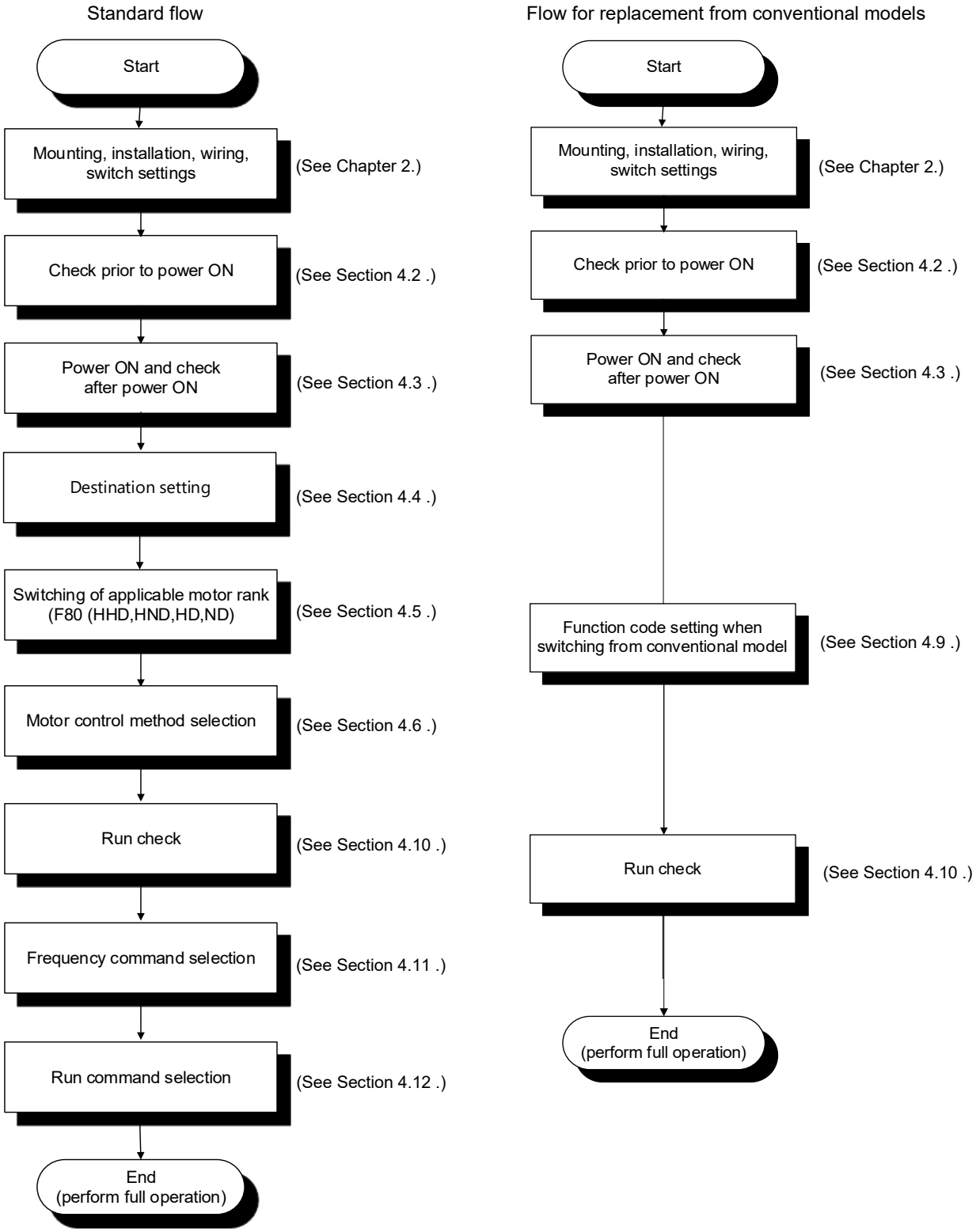

Fig. 4.1-1 Test run procedure

4.2 Checking Prior to Powering On

Check the following before powering on the inverter.

(1) Check that the wiring is correct.
Especially check the wiring to the inverter input terminals (L1/R, L2/S, L3/T) and output terminals (U, V, and W). Also check that the grounding wires are connected to the grounding terminals (⏚G) correctly. (See Fig. 4.2-1.)

⚠WARNING⚠

- Never connect power supply wires to the inverter output terminals U, V, and W. Doing so and turning the power ON breaks the inverter.
- Be sure to connect the grounding wires of the inverter and the motor to the ground electrodes.

Failure to observe this could result in electric shock.

(2) Check the control circuit terminals and main circuit terminals for short circuits or ground faults.

(3) Check for loose terminals, connectors and screws.

(4) Check that the motor is separated from mechanical equipment.

(5) Make sure that all switches of devices connected to the inverter are turned OFF.
Powering on the inverter with any of those switches being ON may cause an unexpected motor operation.

(6) Check that safety measures are taken against runaway of the equipment, e.g., a defense to prevent people from access to the equipment.

(7) If using a DC reactor (DCR) (option), is it properly connected to DC reactor terminals P1 and P(+)?

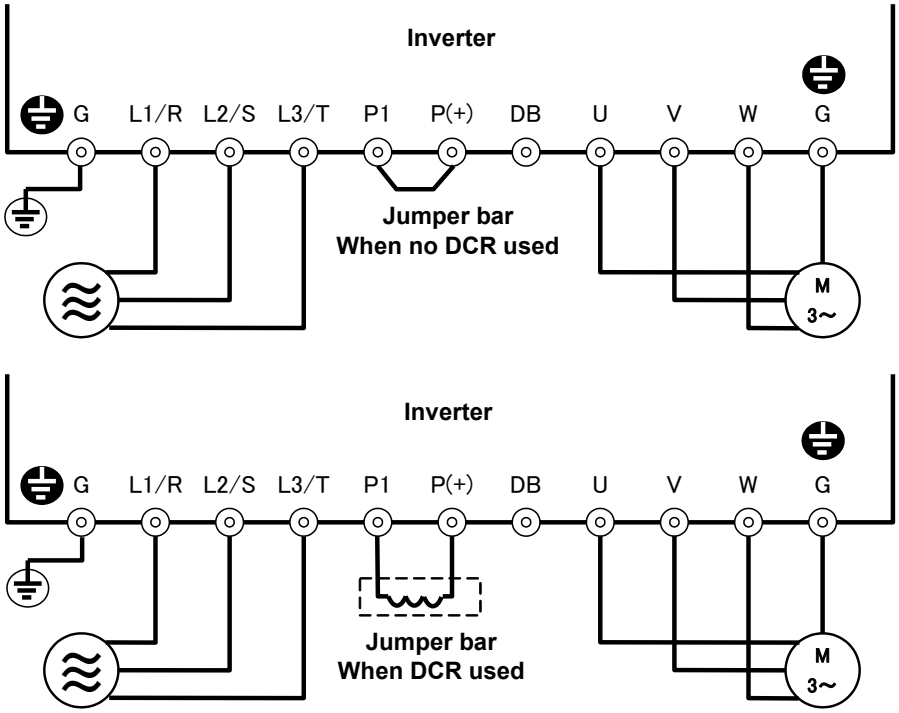

Fig. 4.2-1 Connection of main circuit terminals (three-phase power supply)

4.3 Powering ON and Checking

⚠WARNING⚠

- Be sure to attach the surface cover before turning the power on. Do not remove the cover while the power is ON.
- Do not operate the unit with wet hands.

Failure to observe this could result in electric shock.

Turn the power ON and check the following items. The following is a case when no function code data is changed from the factory defaults.

(1) Is 0.00 (reference frequency 0 Hz) blinking on the LED monitor? (See Fig. 4.3-1.)
If a value of other than 0.00 is displayed on the LED monitor, use the ▲/▼ keys to set it to 0.00.

(2) If the inverter cooling fan rotating?
(FRN0008G2S-2G/FRN0004G2□-4G or below are not equipped with a cooling fan.)

Fig. 4.3-1 Display of the LED monitor after Power-on

Note In the case of G2E (type with built-in EMC filter), noise may be produced from the reactor or capacitors inside the inverter due to distortion in the power supply voltage, but this is not an abnormality.

4.4 Destination setting

4.4.1 Overview

For inverter type FRN****G2■-□G (Global Model), the destination must be set first after the initial power supply. Without setting the destination, the function code cannot be changed. The inverter cannot be operated either.

Note If the function code set including the destination setting function code (H 101) is copied with the data copy function or the FRENIC loader, manual destination setting is not required.

The destination can be selected from the regions of Japan, Asia, China, Europe, Americas and East Asia. By setting the destination, basic function codes such as rated voltage, rated frequency, etc. are initialized to general values in each region (Table 4.4-1).

Table 4.4-1 Initial value for each destination

Destination	Asia	China	Europe	Americas	East Asia	Japan
LED display (When using TP-E2)	AS iA	CHn	Eu	AMEr	ESEA	JPn
LED display (When using TP-A2SW)	2:Asia	3:China	4:Europe	5:Americas	6:Taiwan	1:Japan
H101:Destination	2	3	4	5	6	1
F02:Operation method	2	2	2	0	2	2
F03/A01/b01/r01:Maximum output frequency 1 to 4	60.0Hz (200V) 50.0Hz (400V)	50.0Hz	50.0Hz	60.0Hz	60.0Hz	60.0Hz
F04/A02/b02/r02:Base frequency 1 to 4						50.0Hz
F05/A03/b03/r03:Rated voltage at base frequency 1 to 4	220/415V	380V	400V	230/460V	200/400V	200/400V
F06/A04/b04/r04:Maximum output voltage 1 to 4						
F09/A05/b05/r05:Torque boost 1 to 4	Fuji IE3 motor Standard value			HP rating motors	Fuji IE3 motor Standard value	
F11/A07/b07/r07:Electronic thermal 1 to 4(Overload detection level)						
F14:Restart mode after momentary power failure (Mode selection)	1	1	0	0	1	1
F80:Switching between HND and HHD drive modes	HHD	HHD	HND	HND	HHD	HHD
E31/E36/E54:Frequency detection 1 to 3(Level)	60.0Hz (200V) 50.0Hz (400V)	50.0Hz	50.0Hz	60.0Hz	60.0Hz	60.0Hz
E34/E37/E55:Overload early warning/Current detection 1 to 3 (Level)	Fuji IE3 motor Standard value			HP rating motors	Fuji IE3 motor Standard value	
P02/A16/b16/r16:Motor 1 to 4(Rated capacity)	kW	kW	kW	HP	kW	kW
P03/A17/b17/r17: Motor 1 to 4(Rated current)	Fuji IE3 motor Standard value			HP rating motors	Fuji IE3 motor Standard value	
P06/A20/b20/r20: Motor 1 to 4(No-load current)						
P07/A21/b21/r21: Motor 1 to 4(%R1)						
P08/A22/b22/r22: Motor 1 to 4(%X)						
P12/A26/b26/r26: Motor 1 to 4(Rated slip frequency)						
P55/A55/b55/r55: Motor 1 to 4(Torque current under vector control)						
P99/A39/b39/r39:Motor 1 to 4 selection	5	5	5	1	5	5
H96:STOP key priority/ Start check function	0	0	0	3	0	0
K01:Multifunction keypad TP-A2SW(Language selection)	1	6	1	1	1	0

4.4.2 Setting the initial destination

Set the initial destination as follows.

[1] When using the keypad (TP-E2)

(1) Install the keypad and turn ON the power.
8.dESt appears on the display area when turning ON the power for the first time.

(2) Press (FUNC DATA) key.
AS iA (Asian region) is displayed first.

(3) Press (▲) key or (▼) key to select other destination.
For details on the region display transition, refer to Figure 4.4-1.

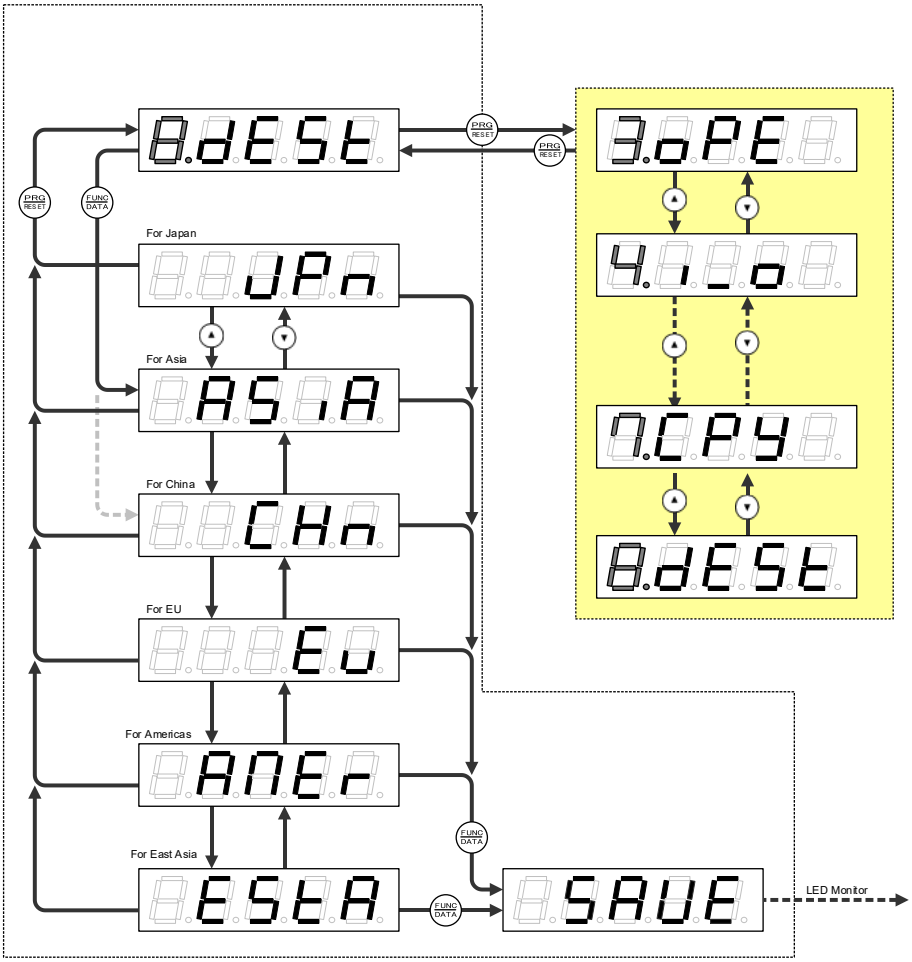

Figure 4.4-1 Destination setting status transition chart

(4) After selecting the destination, press (FUNC DATA) key.
SAUE is displayed and the destination setting is saved. After saving the setting, the display area will change to "0.00".

Note If the destination is changed after the initial destination setting, it can also be changed with 8.dESt in the program mode menu. Note that if the destination is changed by 8.dESt, all function codes are initialized to the factory defaults.

[2] When using Multi-function keypad (TP-A2SW)

(1) Install the multi-function keypad and turn ON the power.
"Destination 2:Asia" is displayed.

(2) Press (STOP) key and (▲) key simultaneously to select any destination.
(Region display transition is the same as with the standard keypad. Refer to Figure 4.4-1).

(3) Press (SET) key.
The keypad display will turn OFF briefly, and then "STOP 0.00Hz" will appear for the run mode.

4.5 Switching the Applicable Motor Rating (HHD/HND/HD/ND Specifications)

Changing the data of function code F80 switches the applicable motor rank to match load conditions. In HHD, HND or HD specification, the inverter drives a motor whose capacity is one or two ranks lower than the inverter's one.

Double key operation (STOP key + ▲/▼ keys) is required to change function code F80 data.

Table 4.5-1

F80 data	Specification type	Application	Applicable motor	Continuous current rating level	Overload capability	Operating temperature
0	HHD specification	Heavy load	Please refer to Chapter 12 “SPECIFICATIONS”.		150% for 1 min, 200% for 3 s	50°C (122°F)
1	HND specification	Standard load			120% for 1 min	50°C (122°F)
3 *102	HD specification	Heavy load			150% for 1 min	40°C (104°F)
4 *102	ND specification	Standard load			120% for 1 min	40°C (104°F)

*102 Supported with ROM 0600 or later.

Some models are incompatible with the HND, HD and ND specification depending on the inverter rated voltage and capacity. Please refer to Chapter 12 “SPECIFICATIONS”.

HHD/HND/HD/ND specification inverters are subject to restrictions on the function code data setting range and internal processing as listed below.

Table 4.5-2

Function code	Name	HHD specification	HND specification	HD specification	HD specification	Remarks
F21*	DC braking 1 (Braking level)	Setting range: 0 to 100%	Setting range: 0 to 80 %	Setting range: 0 to 80 %	Setting range: 0 to 60 %	With the HND/HD/ND specification, a value out of the range, if specified, automatically changes to the maximum value allowable for the HND/HD/ND specification.
F26	Motor sound (Carrier frequency)	Setting range HHD specification 0.75 to 16 kHz (FRN0003G2S-2G to FRN0288G2S-2G) 0.75 to 16 kHz (FRN0002G2■-4G to FRN0179G2■-4G) 0.75 to 10 kHz (FRN0346G2S-2G to FRN0432G2S-2G) 0.75 to 10 kHz (FRN0217G2■-4G to FRN1480G2■-4G) HND specification 0.75 to 16 kHz (FRN0032G2S-2G to FRN0088G2S-2G) 0.75 to 16 kHz (FRN0018G2■-4G to FRN0045G2■-4G) 0.75 to 10 kHz (FRN0115G2S-2G to FRN0288G2S-2G) 0.75 to 10 kHz (FRN0060G2■-4G to FRN0179G2■-4G) 0.75 to 6 kHz (FRN0346G2S-2G to FRN0432G2S-2G) 0.75 to 6 kHz (FRN0217G2■-4G to FRN1480G2■-4G) HD specification 0.75 to 10 kHz (FRN0085G2■-4G to FRN0179G2■-4G) 0.75 to 6 kHz (FRN0217G2■-4G to FRN1480G2■-4G) ND specification 0.75 to 6 kHz (FRN0085G2■-4G to FRN1480G2■-4G)				

F44	Current limiter (Level)	Initial value: 180% (FRN0075G2S-2G/FRN0041 G2■-4G or below) Initial value: 160% (FRN0088G2S-2G/FRN0045 G2■-4G or above)	Initial value: 130%	Initial value: 160%	Initial value: 130%	When changing F80, the value is rewritten with the value on the left.
-	Current indication and output	Based on the rated current level for HHD specification	Based on the rated current level for HND specification	Based on the rated current level for HD specification	Based on the rated current level for ND specification	

Switching between the drive modes does not automatically change the motor rated capacity (P02*) to the one suitable for the rank-changed motor, so configure the P02* data to match the applied motor rating as required.

4.6 Selecting the Motor Control Method

FRENIC-MEGA supports the following motor control methods.

Refer to “4.7 Performance Comparison for Drive Controls (Summary)” for details on the features of each control method.

Table 4.6-1

<table>
<tr><th>F42* data</th><th>Drive control</th><th>Drive control</th><th>Applicable motor type</th><th>Speed feedback</th><th>Speed control</th><th>Ref.</th></tr>
<tr><td>0</td><td>V/f control with slip compensation inactive</td><td rowspan="4">V/f control</td><td rowspan="6">Induction motor</td><td rowspan="3">No</td><td>Frequency control</td><td>4.8.1 [1]</td></tr>
<tr><td>1</td><td>Dynamic torque vector control</td><td rowspan="2">Frequency control with slip compensation</td><td rowspan="2">4.8.1 [2]</td></tr>
<tr><td>2</td><td>V/f control with slip compensation active</td></tr>
<tr><td>3</td><td>V/f control with sensor</td><td rowspan="2">Yes</td><td rowspan="2">Frequency control with ASR (Auto speed regulator)</td><td>4.8.1 [3]</td></tr>
<tr><td>4</td><td>Dynamic torque vector control with sensor</td><td>4.8.1 [3]</td></tr>
<tr><td>5</td><td>Sensorless vector control</td><td rowspan="4">Vector control</td><td>No (estimated speed)</td><td rowspan="5">Speed control with automatic speed regulator (ASR)</td><td>4.8.1 [3]</td></tr>
<tr><td>6</td><td>Vector control with sensor</td><td>Yes</td><td>4.8.1 [4]</td></tr>
<tr><td>15</td><td>Sensorless vector control</td><td rowspan="2">Synchronous motor</td><td>No (estimated speed)</td><td>4.8.2 [1]</td></tr>
<tr><td>16</td><td>Vector control with sensor</td><td>Yes</td><td>4.8.2 [2]</td></tr>
</table>

4.6.1 V/f control without slip compensation (induction motors)

Under this control, the inverter controls a motor with the voltage and frequency according to the V/f pattern specified by function codes. This control disables all automatically controlled features such as the slip compensation, so no unpredictable output fluctuation occurs, enabling stable operation with constant output frequency.

4.6.2 V/f control with slip compensation (induction motors)

Applying any load to an induction motor causes a rotational slip due to the motor characteristics, decreasing the motor rotation. The inverter’s slip compensation function first presumes the slip value of the motor based on the motor torque generated and raises the output frequency to compensate for the decrease in motor rotation. This prevents the motor from decreasing the rotation due to the slip. That is, this function is effective for improving the motor speed control accuracy.

The compensation value is specified by combination of function codes P12* (Rated slip frequency), P09* (Slip compensation gain for driving) and P11* (Slip compensation gain for braking).

Function code H68* enables or disables the slip compensation function according to the motor driving conditions.

Table 4.6-2

<table>
<tr><th rowspan="2">H68* data</th><th colspan="2">Motor driving condition</th><th colspan="2">Motor driving frequency zone</th></tr>
<tr><th>Accel / decel</th><th>During constant speed</th><th>Base frequency or below</th><th>Above the base frequency</th></tr>
<tr><td>0</td><td>Enable</td><td>Enable</td><td>Enable</td><td>Enable</td></tr>
<tr><td>1</td><td>Disable</td><td>Enable</td><td>Enable</td><td>Enable</td></tr>
<tr><td>2</td><td>Enable</td><td>Enable</td><td>Enable</td><td>Disable</td></tr>
<tr><td>3</td><td>Disable</td><td>Enable</td><td>Enable</td><td>Disable</td></tr>
</table>

4.6.3 Dynamic torque vector control (induction motors)

To get the maximal torque out of a motor, this control calculates the motor torque matched to the load applied and uses it to optimize the voltage and current vector output. When the vector control without speed sensor (dynamic torque vector) is selected, automatically auto torque boost and slip compensation become enabled.

This control is effective for improving the system response to external disturbances such as load fluctuations, and the motor speed control accuracy. However, this control is open loop V/f control, and like vector control, current control is not performed. Consequently, there are times when the inverter is unable to respond to sudden load disturbances, but this control also has beneficial characteristic such as a greater maximum torque than with vector control.

4.6.4 V/f control with sensor (induction motors)

Applying any load to an induction motor causes a rotational slip due to the motor characteristics, decreasing the motor rotation.
Under V/f control with speed sensor, the inverter detects the motor rotation using the encoder mounted on the motor shaft and compensates for the decrease in slip frequency by the PI control to match the motor rotation with the reference speed. This improves the motor speed control accuracy.

4.6.5 Dynamic torque vector control with sensor (induction motors)

The difference from “V/f control with speed sensor” stated above is to calculate the motor torque that matches to the load applied, and use it to optimize the voltage and current vector output for getting the maximal torque from the motor. This is effective for improving the system response to external disturbances such as load fluctuations, and the motor speed control accuracy.

4.6.6 Sensorless vector control (induction motors)

This control estimates the motor speed based on the inverter's output voltage and current, and uses the estimated speed for speed control. It also decomposes the motor drive current into the exciting and torque current components, and controls each of those components as vectors. A PG interface card (option) is not required. It is possible to obtain the desired response by adjusting the control constants (PI constants) using the speed regulator (PI controller).

With vector control, a difference (voltage margin) is required between the voltage that the inverter is capable of outputting and the motor induced voltage to a certain extent in order to control the motor current. Generally speaking, general-purpose motors are designed for use with commercial power supplies, but due to the need for this voltage margin, it is necessary to control the current by suppressing the motor terminal voltage. By doing so, it is not possible to deliver rated torque even when the original motor rated current is flowing. To ensure that the rated torque is delivered, it is necessary to increase the rated current (the same applies with vector control with speed sensor).

4.6.7 Vector control with sensor (induction motors)

With this control, a PG interface card (option) must be installed. The inverter detects the motor's rotational position and speed based on PG feedback signals from the motor PG, and uses them to control speed. It also breaks down the motor current into its exciting current and torque current components, and controls each of the components as vectors. It is possible to obtain the desired response by adjusting the control constants (PI constants) using the speed regulator (PI controller). This control enables the speed control with higher accuracy and quicker response than the vector control without speed sensor.

Note

Slip compensation, dynamic torque vector control, sensorless vector control, and vector control with sensor used motor constants. the following conditions should be satisfied; otherwise, full control performance may not be obtained.

- A single motor should be controlled per inverter.
- Motor parameters P02*, P03*, and P06* to P13* should be properly configured or auto-tuning (P04*) should be performed.
- If the capacity of the motor being controlled is smaller than the inverter rated capacity, the current detection resolution will deteriorate, and control performance will drop. In such cases, a motor and inverter combination up to one rank lower is recommended.
- The wiring distance between the inverter and motor should be 50 m (164 ft) or less for FRN0018G2S-2G/FRN0009G2■-4G or earlier, and 100 m (328.084 ft) or less for FRN0032G2S-2G/FRN0018G2■-4G or later. If it is longer, the inverter may not control the motor due to leakage current flowing through stray capacitance to the ground or between wires. Especially, small capacity inverters whose rated current is also small may be unable to control the motor correctly even if the wiring is less than 50 m (164 ft). In that case, make the wiring length as short as possible or use a wire with small stray capacitance (e.g., loosely-bundled cable) to minimize the stray capacitance.

4.6.8 Sensorless vector control (synchronous motors)

This control estimates the motor speed based on the inverter's output voltage and current, and uses the estimated speed for speed control. It also decomposes the motor drive current into the exciting and torque current components, and controls each of those components as vectors. A PG interface card is not required. It is possible to obtain the desired response by adjusting the control constants (PI constants) using the speed regulator (PI controller).

4.6.9 Vector control with sensor (synchronous motors)

With this control, a PG interface card must be installed. The inverter detects the motor speed and pole position based on PG feedback signals from the motor speed/pole position sensors, and uses them to control speed. It also breaks down the motor current into its exciting current and torque current components, and controls each of the components as vectors. It is possible to obtain the desired response by adjusting the control constants (PI constants) using the speed regulator (PI controller).

Sensorless vector control offers a wide speed control range, and highly-responsive speed control.
(Use of the inverter in combination with a Fuji Electric standard synchronous motor with sensor is recommended.)

Note

Motor constants are used with sensorless vector control and vector control with sensor (synchronous motors). Consequently, the following conditions should be satisfied; otherwise, full control performance may not be obtained.

- A single motor should be controlled per inverter.
- Motor parameters P02, P03, P30, and P60 to P63 should be properly configured or auto-tuning should be performed.
- If the capacity of the motor being controlled is smaller than the inverter rated capacity, the current detection resolution will deteriorate, and control performance will drop. In such cases, a motor and inverter combination up to one rank below is recommended.
- The wiring distance between the inverter and motor should be 50 m (164 ft) or less for FRN0018G2S-2G/FRN0009G2■-4G or earlier, and 100 m (328.084 ft) or less for FRN0032G2S-2G/FRN0018G2■-4G or later. If it is longer, the inverter may not control the motor due to leakage current flowing through stray capacitance to the ground or between wires. Especially, small capacity inverters whose rated current is also small may be unable to control the motor correctly even if the wiring is less than 100 m (164 ft). In that case, make the wiring length as short as possible or use a wire with small stray capacitance (e.g., loosely-bundled cable) to minimize the stray capacitance.
- To use the inverter with the output frequency exceeding 120 Hz, it is recommended that the carrier frequency (F26) be set to 5 kHz or higher.

4.7 Performance Comparison for Drive Controls (Summary)

Each drive control has advantages and disadvantages. Table 4.7 1 compares the different drive controls, showing their relative performance in each characteristic. Select the one that shows high performance in the characteristics that are important in your machine. In rare cases, the performance shown below may not be obtained due to various conditions including motor characteristics or mechanical rigidity. The final performance should be determined by adjusting the speed control system or other elements with the inverter being connected to the machine (load).
If you have any questions, contact your Fuji Electric representative.

Table 4.7-1

F42* data	0	1	2	3	4	5	6	15	16
Control method	**V/f control without slip compensation**	**Dynamic torque vector control**	**V/f control with slip compensation active**	**V/f control with sensor**	**Dynamic torque vector control with sensor**	**Sensorless vector control**	**Vector control with sensor**	**Sensorless vector control**	**Vector control with sensor**
Applicable motor	Induction motor							Synchronous motor	
PG (pulse generator, encoder)	Not required	Not required	Not required	Required	Required	Not required	Required	Not required	Required
Motor parameters (tuning, data sheets)	Not required	Required	Required (slip frequency)	Not required	Required	Required	Required	Required	Required
Speed control (speed regulator)	No	No	No	Yes	Yes	Yes	Yes	Yes	Yes
Current control (current regulator)	No	No	No	No	No	Yes	Yes	Yes	Yes
Output frequency accuracy	A	C	C	C	C	C	C	C	C
Speed control accuracy	D	C	D	A	A	Y	A	A	A
Speed responsiveness	D	C	C	Y	Y	Y	A	Y	A
Zero speed control	-	-	-	-	-	C	A	C (motor dependent)	A
Torque accuracy	D	Y	D	D	Y	A	A	Y	A
Torque responsiveness	D	C	D	D	C	Y	A	Y	A
Starting torque	D	Y	D	D	Y	Y	A	C	A
Maximum torque	A	A	A	A	A	Y (Control based on output voltage ≈ power supply voltage)	Y (Control based on output voltage ≈ power supply voltage)	Y (Control based on output voltage ≈ power supply voltage)	Y (Control based on output voltage ≈ power supply voltage)
Torque control	Not possible	Not possible	Not possible	Not possible	Not possible	Possible	Possible	Not possible	Possible
Operation with multiple motors	Possible	Not possible	Not possible	Not possible	Not possible	Not possible	Not possible	Not possible	Not possible
Main applications	Variable speed applications for which responsiveness, speed/torque accuracy are unnecessary	Variable speed applications for which starting torque, torque accuracy are necessary, but for which speed accuracy is not	Variable speed applications for which speed accuracy is necessary to some extent, but for which a level of responsiveness and torque accuracy requiring the use of an encoder is not	Variable speed applications for which speed accuracy is necessary, but for which responsiveness and torque accuracy are not	Variable speed applications for which starting torque and speed accuracy are necessary	Variable speed applications for which starting torque, speed/torque responsiveness, and accuracy are necessary to some extent, but not at a level that requires the use of an encoder	Variable speed applications for which starting torque, speed/torque responsiveness, and high-accuracy control are necessary	Variable speed applications for which responsiveness and speed accuracy are necessary to some extent, but for which a level of starting torque that requires the use of an encoder is not	Variable speed applications for which starting torque, speed/torque responsiveness, and high-accuracy control are necessary

Relative performance symbols A: Excellent, B: Good, C: Effective, D: Less effective, -: Not effective

4.8 Configuring Function Codes for Drive Controls

The relation of the motor control method, motor selection and motor parameter setting is shown in Figure 4.8 1. It is necessary to change the motor parameter setting depending on the driven motor.

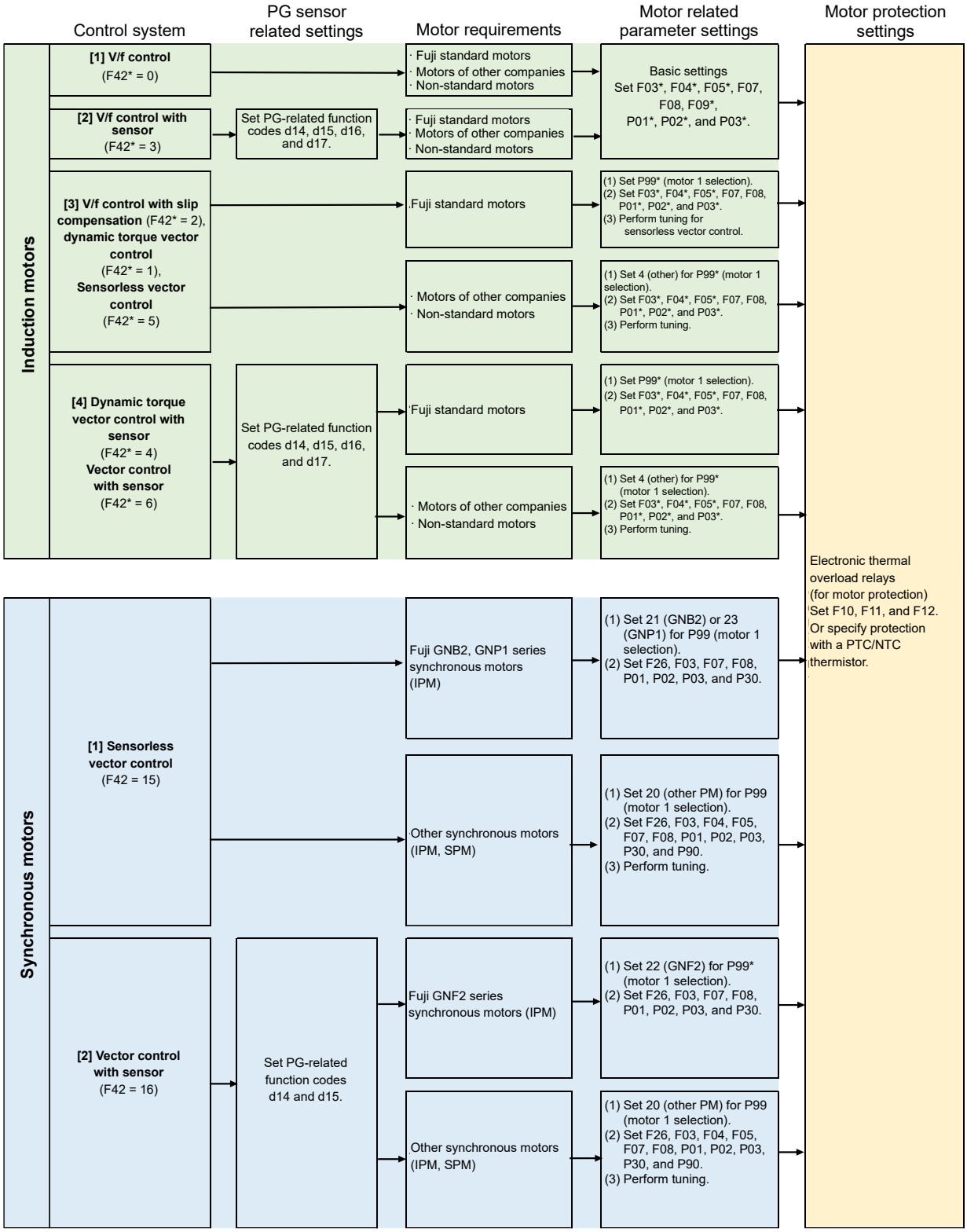

Fig.4.8-1

Note The factory default is set to induction motor with V/f control (F42* = 0). Accordingly, it will not be possible to run the motor properly if a synchronous motor is connected.

If running a synchronous motor, it is necessary to change the F42 setting to 15 or 16, and set the motor constants correctly beforehand.

Refer to “4.8.2 Synchronous motor operation” for basic settings.

Note If F42 is changed to synchronous motor (15 or 16), or if synchronous motor is changed to induction motor, it will be necessary to change other motor parameters such as F04, F05, and P01.

Refer to Chapter 5 “5.3.4 P codes (Motor 1 parameters)” for details.

Tip It is recommended to change to torque control (H18 = 2 or 3) after checking that the operation is normal in the test run.
The test run seems to be better to be executed under speed control (H18=0) temporarily even if torque control is required.

4.8.1 Induction motor operation

[1] If running the motor with simple V/f control

Configuring the function codes of motor parameters

If using V/f control (F42* = 0), configure the function codes listed below according to the motor ratings and design values of the machine. For the motor ratings, check the ratings printed on the motor's nameplate. For design values of the machine, ask system integrators or machine manufacturers about them.

For details on how to modify the function code data, see Chapter 3 “3.4.1 Setting function codes “Data Setting: I.F__ to I.P__””.

Table 4.8-1

Function code	Name	Function code data	Factory default
F04*	Base frequency 1	Motor rating (printed on the nameplate of the motor)	Please refer to Table 4.4-1 Initial value for each destination
F05*	Rated voltage at base frequency 1		
P99*	Motor 1 selection	0: Fuji standard motors, 8-series 2: Fuji dedicated motors for vector control 3: Fuji standard motors, 6-series 4: Non-standard motors, motors of other companies 5: Fuji premium efficiency motors	
P02*	Motor 1 (Rated capacity)	Applicable motor capacity	Standard applicable motor capacity
F03*	Maximum frequency 1	Machine design values **(Note)** For the test run of the motor, increase values so that they are longer than your machine design values. If the specified time is short, the inverter may not run the motor properly.	Please refer to Table 4.4-1 Initial value for each destination
F07	Acceleration time 1 (Note)		FRN0115G2S-2G/FRN0060G2■-4G or below: 6.00 (s) FRN0146G2S-2G/FRN0085G2■-4G or above: 20.00 (s)
F08	Deceleration time 1 (Note)		

Note

Changing P02* will automatically change P03*, P06* to P23*, P55*, P56*, and H46, and therefore caution is advised.

If using control functions such as auto torque boost, torque calculation value monitoring, auto energy saving, torque limiting, anti-regenerative control, auto search, slip compensation, torque vectors, droop control, and overload stop function, it is necessary to set the appropriate motor constants.

In any of the following cases, the full control performance may not be obtained from the inverter because the motor parameters differ from the factory defaults, so perform auto-tuning.

- The driven motor is Fuji standard motors, 6-series（P99*=3）
- The driven motor is a non-Fuji or a Fuji non-standard one.
- The wiring distance between the inverter and the motor is too long (generally 20 m or more).
- A reactor is installed between the inverter and the motor.

Refer to “4.8.1 [5] Induction motor tuning method“ if performing tuning.

[2] If running the motor with V/f control with sensor

Configuring the function codes concerning a PG (pulse generator) and PG signals

If using “V/f control with sensor (F42* = 3)”, “Dynamic torque vector control with sensor (F42* = 4)”, or “Vector control with sensor (F42* = 6)”, it is necessary to set function codes corresponding to the encoder specification.

Refer to Chapter 3 “3.4.1 Setting function codes “Data Setting: 1.F__ to 1.H__”” for details on how to change function code data.

Table 4.8-2

Function code	Name	Function code data	Factory default
d 14	PG option Ch2 *1 (Pulse input format)	2: A, B phase 90° phase difference (B phase lead) 3: A, B phase 90° phase difference (A phase lead)	2: A, B phase (B phase lead)
d 15	(Encoder pulse resolution)	Set “Pulse number of the target motor encoder” in hexadecimal notation.(Displayed in decimal notation on the multi-function keypad) 0400 HEX/1024 P/R	0400 HEX
d 16	(Pulse scaling factor 1)	Reduction ratio between the motor and the encoder Setting is unnecessary if the encoder is directly linked to the motor (factory default = 1). Motor speed = Encoder speed x (d17) / (d16)	1
d 17	(Pulse scaling factor 2)		1

*1 If PG input switching “PG-SEL” (data = 83) has not been set for function codes E01 to E09, the motor runs based on encoder input as the speed feedback. Refer to “■ PG input switching “PG-SEL” assignment” in Chapter 5 “5.3.2 E codes (Extension terminal functions)” for details on operation when “PG-SEL” is set.

Note If the rotation direction/speed detection signal from the encoder does not match with the motor rotation direction, excessive current is applied. In the case of the vector control with speed sensor (F42*=6), the motor does not reach the set frequency but rotates slowly at the speed equivalent to the slip frequency. In this case, check that the phase order of motor wires is correct and the encoder wires are correctly connected and are not broken.

Tip In 4_17 to 4_18 of I/O check, the number of feedback pulses per second of AB phase and Z phase can be checked. In 3_29 of the drive monitor, the frequency [Hz] calculated from the speed detection signal from the encoder can be checked. These are displayed regardless of the control method if the PG interface card is mounted and the encoder is wired.

Fuji regards the CCW as the forward rotation direction viewed from the motor output shaft as shown in Figure 4.8 2. During rotation in the forward direction, the PG output pulse forms a forward rotation signal (B phase leads by 90 degrees) as shown in Figure 4.8-2, and during rotation in the reverse direction, a reverse rotation signal (A phase lead s by 90 degrees).

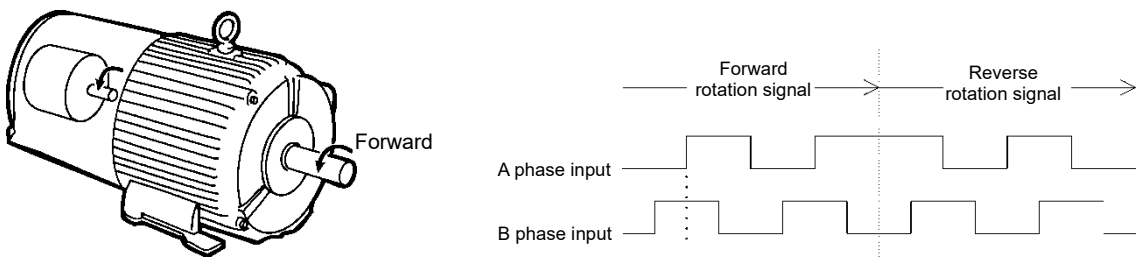

Fig.4.8-2

Note In the case of using motors which comply with IEC standard, their rotation directions are opposite to that in Figure 4.8-2.

Configuring the function codes of motor parameters

If using “V/f control with sensor (F42* = 3)”, it is necessary to set the basic function codes below.

Configure the function codes listed below according to the motor ratings and design values of the machine. For the motor ratings, check the ratings printed on the motor's nameplate. For design values of the machine, ask system integrators or machine manufacturers about them.

For details on how to modify the function code data, see Chapter 3 “3.4.1 Setting function codes “Data Setting: 1.F__ to 1.P__””.

(1) Setting motor basic constants

Table 4.8-3

Function code	Name	Function code data	Factory default
F04*	Base frequency 1	Motor rating (printed on the nameplate of the motor)	Please refer to Table 4.4-1 Initial value for each destination
F05*	Rated voltage at base frequency 1		
P99*	Motor 1 selection	0: Fuji standard motors, 8-series 2: Fuji dedicated motors for vector control 3: Fuji standard motors, 6-series 4: Non-standard motors, motors of other companies 5: Fuji premium efficiency motors	
P02*	Motor 1 (Rated capacity)	Applicable motor capacity	Standard applicable motor capacity
F03*	Maximum frequency 1	Machine design values **(Note)** For the test run of the motor, increase values so that they are longer than your machine design values. If the specified time is short, the inverter may not run the motor properly.	Please refer to Table 4.4-1 Initial value for each destination
F07	Acceleration time 1 (Note)		FRN0115G2S-2G/FRN0060G2■-4G or below: 6.00 (s) FRN0146G2S-2G/FRN0085G2■-4G or above: 20.00 (s)
F08	Deceleration time 1 (Note)		

(2) Initializing motor constants

After setting the basic motor constants, initialize (H03 = 2) motor 1 with function code H03.
Necessary motor constant related function codes are automatically set. Refer to Chapter 5 “5.3.5 H codes (High performance functions)” for details.

Note Changing P02* will automatically change P03*, P06* to P23*, P55*, P56*, and H46, and therefore caution is advised.

If using control functions such as auto torque boost, torque calculation value monitoring, auto energy saving, torque limiting, anti-regenerative control, auto search, slip compensation, torque vectors, droop control, and overload stop function, it is necessary to set the appropriate motor constants.

In any of the following cases, the full control performance may not be obtained from the inverter because the motor parameters differ from the factory defaults, so perform auto-tuning.

- The driven motor is Fuji standard motors, 6-series（P99*=3）
- The driven motor is a non-Fuji or a Fuji non-standard one.
- The wiring distance between the inverter and the motor is too long (generally 20 m (65.6 ft) or more).
- A reactor is installed between the inverter and the motor.

Refer to “4.8.1 [5] Induction motor tuning method“ if performing tuning.

[3] If running the motor with V/f control with slip compensation, dynamic torque vector control, or sensorless vector control

Configuring the function codes of motor parameters

If using “V/f control with slip compensation (F42* = 2)”, “Dynamic torque vector control (F42* = 1”, or “Sensorless vector control (F42* = 5)”, it is necessary to set the basic function codes below.

Configure the function codes listed below according to the motor ratings and design values of the machine. For the motor ratings, check the ratings printed on the motor's nameplate. For design values of the machine, ask system integrators or machine manufacturers about them.

For details on how to modify the function code data, see Chapter 3 “3.4.1 Setting function codes “Data Setting: 1.F__ to 1.P__””.

Fuji standard motors

(1) Setting motor basic constants

Table 4.8-4

Function code	Name	Function code data	Factory default
F04*	Base frequency 1	Motor rating (printed on the nameplate of the motor)	Please refer to Table 4.4-1 Initial value for each destination
F05*	Rated voltage at base frequency 1		
P99*	Motor 1 selection	0: Fuji standard motors, 8-series 2: Fuji dedicated motors for vector control 3: Fuji standard motors, 6-series 5: Fuji premium efficiency motor	
P02*	Motor 1 (Rated capacity)	Applicable motor capacity	Standard applicable motor capacity
F03*	Maximum frequency 1	Machine design values **(Note)** For the test run of the motor, increase values so that they are longer than your machine design values. If the specified time is short, the inverter may not run the motor properly.	Please refer to Table 4.4-1 Initial value for each destination
F07	Acceleration time 1 (Note)		FRN0115G2S-2G/FRN0060G2■-4G or below: 6.00 (s) FRN0146G2S-2G/FRN0085G2■-4G or above: 20.00 (s)
F08	Deceleration time 1 (Note)		

(2) Initializing motor constants

After setting the basic motor constants, initialize (H03 = 2) motor 1 with the function code H03.
Necessary motor constant related function codes are automatically set. Refer to Chapter 5 "5.3.5 H codes (High performance functions)" for details.

Note Changing P02* will automatically change P03*, P06* to P23*, P55*, P56*, and H46, and therefore caution is advised.

If using a Fuji standard motor, 6-series (P99* = 3), the motor constants for the Fuji standard motor, 8-series are input. Either input the motor constants for the 6-series manually, or perform tuning.

Even for Fuji standard motors, perform tuning in such cases as when the length of wiring between the inverter and motor is long (generally 20 m (65.6 ft) or more), or if connecting a reactor between the inverter and motor.

(3) Performing tuning

Even for Fuji standard motors, be sure to perform tuning if using sensorless vector control.

Perform tuning in accordance with the “4.8.1 [5] Induction motor tuning method”.

Fuji non-standard motors, motors of other companies

(1) Setting the motor basic constants

Table 4.8-5

Function code	Name	Function code data	Factory default
P 99*	Motor 1 selection	4: Other motors	Please refer to Table 4.4-1 Initial value for each destination
F 04*	Base frequency 1	Motor rated value (printed on motor rating nameplate) If the motor synchronous rotation speed (min-1) is identified, calculate F04* by the following formula and set it. $\frac{\text{Synchronous speed}}{120} \times \text{No. of poles}$	
F 05*	Rated voltage at base frequency 1		
P 02*	Motor 1 (Rated capacity)		Standard applicable motor capacity
P 03*	Motor 1 (Rated current)		Please refer to Table 4.4-1 Initial value for each destination
P 06*	Motor 1 (No-load current)	Setting is not necessary if rotation tuning is possible. In case of difficult to execute rotation tuning: Set the value in the motor test report or the value calculated by the following formula. $\sqrt{(P03)^2-(P55)^2}$	
F 03*	Maximum frequency 1	Machine design values **(Note)** For the test run of the motor, increase values so that they are longer than your machine design values. If the specified time is short, the inverter may not run the motor properly.	
F 07	Acceleration time 1 (Note)		FRN0115G2S-2G/FRN0060G2■-4G or below: 6.00 (s) FRN0146G2S-2G/FRN0085G2■-4G or above: 20.00 (s)
F 08	Deceleration time 1 (Note)		

Note When accessing the function code P02*, take into account that changing the P02* data automatically updates the data of some function codes. Refer to Chapter 5 "5.3.4 P codes (Motor 1 parameters) and "5.3.5 H codes (High performance functions)" for details.

Note By initializing motor constants after setting the above function codes, there will be function codes that are rewritten automatically. Refer to Chapter 5 "5.3.4 P codes (Motor 1 parameters) and "5.3.5 H codes (High performance functions)" for details.

(2) Performing tuning

Perform tuning in accordance with the “4.8.1 [5] Induction motor tuning method”.

[4] If running the motor with dynamic torque vector control with sensor or vector control with sensor

Configuring the function codes concerning a PG (pulse generator) and PG signals

If running the motor with “Dynamic torque vector control with sensor (F42* = 4)” or “Vector control with sensor (F42* = 6)”, it is necessary to set function codes corresponding to the PG (encoder) specification.

Set function codes in accordance with “4.8.1 [2] If running the motor with V/f control with sensor - Configuring the function codes concerning a PG (pulse generator) and PG signals”.

Configuring the function codes of motor parameters

If using “Dynamic torque vector control with sensor (F42* = 4)” or “Vector control with sensor (F42* = 6)”, it is necessary to set the basic function codes below.

Configure the function codes listed below according to the motor ratings and design values of the machine. For the motor ratings, check the ratings printed on the motor's nameplate. For design values of the machine, ask system integrators or machine manufacturers about them.

For details on how to modify the function code data, see Chapter 3 “3.4.1 Setting function codes “Data Setting: 1.F__ to 1.P__””.

Fuji standard motors

(1) Setting the motor basic constants

Table 4.8-6

Function code	Name	Function code data	Factory default
F04*	Base frequency 1	Motor rating (printed on the nameplate of the motor)	Please refer to Table 4.4-1 Initial value for each destination
F05*	Rated voltage at base frequency 1		
P99*	Motor 1 selection	0: Fuji standard motors, 8-series 2: Fuji dedicated motors for vector control 3: Fuji standard motors, 6-series 5: Fuji premium efficiency motors	
P01*	Motor 1 (No. of poles)	No. of applicable motor poles	4 (poles)
P02*	Motor 1 (Rated capacity)	Applicable motor capacity	Standard applicable motor capacity
F03*	Maximum frequency 1	Machine design values **(Note)** For the test run of the motor, increase values so that they are longer than your machine design values. If the specified time is short, the inverter may not run the motor properly.	Please refer to Table 4.4-1 Initial value for each destination
F07	Acceleration time 1 (Note)		FRN0115G2S-2G/FRN0060G2■-4G or below: 6.00 (s) FRN0146G2S-2G/FRN0085G2■-4G or above: 20.00 (s)
F08	Deceleration time 1 (Note)		

(2) Initializing motor constants

After setting the basic motor constants, initialize (H03 = 2) motor 1 with the function code H03.
Necessary motor constant related function codes are automatically set. Refer to Chapter 5 "5.3.5 H codes (High performance functions)" for details.

Note Changing P02* will automatically change P03*, P06* to P23*, P55*, P56*, and H46, and therefore caution is advised.

If using a Fuji standard motor, 6-series (P99* = 3), the motor constants for the Fuji standard motor, 8-series are input. Either input the motor constants for the 6-series manually, or perform tuning.

Even for Fuji standard motors, perform tuning in such cases as when the length of wiring between the inverter and motor is long (generally 20 m (65.6 ft) or more), or if connecting a reactor between the inverter and motor.

Fuji non-standard motors, motors of other companies

(1) Setting the motor basic constants

Table 4.8-7

Function code	Name	Function code data	Factory default
P 99*	Motor 1 selection	4: Other motors	Please refer to Table 4.4-1 Initial value for each destination
F 04*	Base frequency 1	Motor rated value (printed on motor rating nameplate) If the motor synchronous rotation speed (min-1) is identified, calculate F04* by the following formula and set it. $\frac{\text{Synchronous speed}}{120} \times \text{No. of poles}$	
F 05*	Rated voltage at base frequency 1		
P 01*	Motor 1 (No. of poles)		4 (poles)
P 02*	Motor 1 (Rated capacity)		Standard applicable motor capacity
P 03*	Motor 1 (Rated current)		Please refer to Table 4.4-1 Initial value for each destination
P 06*	Motor 1 (No-load current)	Setting is not necessary if rotation tuning is possible. In case of difficult to execute rotation tuning: Set the value in the motor test report or the value calculated by the following formula. $\sqrt{(P03)^2-(P55)^2}$	
F 03*	Maximum frequency 1	Machine design values **(Note)** For the test run of the motor, increase values so that they are longer than your machine design values. If the specified time is short, the inverter may not run the motor properly.	
F 07	Acceleration time 1 (Note)		FRN0115G2S-2G/FRN0060G2■-4G or below: 6.00 (s) FRN0146G2S-2G/FRN0085G2■-4G or above: 20.00 (s)
F 08	Deceleration time 1 (Note)		

Note When accessing the function code P02*, take into account that changing the P02* data automatically updates the data of some function codes. Refer to Chapter 5 "5.3.4 P codes (Motor 1 parameters) and "5.3.5 H codes (High performance functions)" for details.

Note By initializing motor constants after setting the above function codes, there will be function codes that are rewritten automatically. Refer to Chapter 5 "5.3.4 P codes (Motor 1 parameters) and "5.3.5 H codes (High performance functions)" for details.

(2) Performing tuning

Perform tuning in accordance with the “4.8.1 [5] Induction motor tuning method”.

[5] Induction motor tuning method

If performing tuning, do so using the following procedure after specifying settings based on the control method indicated previously (4.7.1 [1] to [4].)

■ Selecting the tuning method

Check the situation of the machine and select “Tuning with the motor stopped (P04* = 1)” or “Tuning with the motor running (P04* = 2).” For the latter tuning, adjust the acceleration and deceleration times (F07 and F08) and specify the rotation direction that matches the actual rotation direction of the machine.

Note When selecting rotation tuning” (P04* = 2), the motor will rotate at a speed 50% of the base frequency, allowing tuning to be performed safely.

Table 4.8-8

P04* data	Tuning type	Motor parameters subjected to tuning	Tuning	Select under the following conditions
1	Tune while the motor stops.	Primary resistance (%R1) (P07*) Leakage reactance (%X) (P08*) Rated slip frequency (P12*) %X correction factor 1, 2 (P53*, P54*)	Tuning with the motor stopped	Cannot rotate the motor.
2	Tune while the motor is rotating	No-load current (P06*) Primary resistance (%R1) (P07*) Leakage reactance (%X) (P08*) Rated slip frequency (P12*) Magnetic saturation factor 1 to 5, a, b, c (P16* to P23*) %X correction factor 1, 2 (P53*, P54*)	Tuning the %R1 and %X, with the motor stopped. Tuning the no-load current and magnetic saturation factor, with the motor running at 50% of the base frequency. Tuning again the rated slip frequency, with the motor stopped.	Can rotate the motor, provided that it is safe. Note that little load should be applied during tuning. Tuning with load applied decreases the tuning accuracy.
5	Tune while the motor stops.	Primary resistance (%R1) (P07*) Leakage reactance (%X) (P08*) %X correction factor 1, 2 (P53*, P54*)	Tuning with the motor stopped	Cannot rotate the motor. The tuning results of motor parameters will be automatically stored into their respective function codes. If tuning by P04* is performed, the tuning results will be stored into P* codes (Motor 1* parameters).

The tuning results of motor parameters will be automatically stored into their respective function codes.

If tuning by P04* is performed, the tuning results will be stored into P* codes (Motor 1* parameters).
In the case of tuning by A18*, the tuning data is set to the function code (A* code) of motor 2*.

■ Mechanical system preparation

In preparation for tuning, remove the motor coupling with the load and deactivate the safety devices before rotation tuning.

■ **Tuning procedure**

1) Set function code P04* to “1”, “2”, or “5”, and press the (FUNC/DATA) key.
   (The 1, 2, or 5 indicator will blink slowly.)
2) Enter a run command.
   (The factory default is forward rotation with the keypad (RUN) key.)
   To switch to reverse rotation or to select the terminal signal ***FWD*** or ***REV*** as a run command using the keypad, change the data of function code F02.
3) By entering a run command, tuning is started, and the progress status is displayed as a percentage (%).
4) In the case of function code P04* = 2 (rotation tuning), after the tuning in 3) above is complete, the motor is accelerated to approximately 50% of the base frequency and then tuning starts. After measurement, the motor decelerates to stop.
5) If the terminal signal ***FWD*** or ***REV*** is selected as a run command (F02 = 1), “End” appears upon completion of measurement. Turning the run command OFF completes the tuning.
   If the run command has been given through the keypad or the communications link, it automatically turns OFF upon completion of the measurements, which completes the tuning.
6) Upon completion of the tuning, the subsequent function code appears on the keypad.

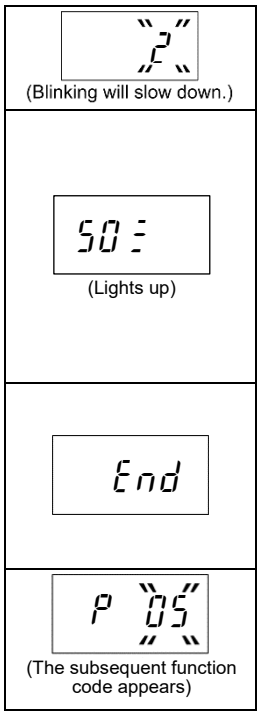

Note The initial setting for the speed regulator (ASR) is rather low to prevent hunting. However, hunting may occur during tuning due to mechanical conditions. If so, a tuning error (Er7) or speed mismatch (ErE) may occur. When Er7 occurs, lower the speed control gain, and when ErE occurs, cancel the speed mismatch detection (d23 = 0), and then perform tuning again.

■ Tuning errors (induction motors)

If the tuning result is incorrect, in the worst case scenario, control performance will be adversely affected, possibly resulting in hunting or accuracy issues. Consequently, if the inverter determines that there is an abnormality in the tuning sequence or tuning results, "Er 7" appears, and the tuning data is destroyed.

Listed below are possible causes that trigger tuning errors and measures.

Table 4.8-9

Possible tuning error causes	Er 7 error subcode	Details and measures
Error in tuning results	1 2 3 4	An interphase voltage unbalance or output phase loss has been detected. Tuning has resulted in an abnormally high or low value of a parameter due to the output circuit opened. • If an abnormality occurs with the motor constants due to motor burnout, etc. ➔ Check for abnormalities with the motor wiring or the motor itself.
Sequence error	7 8 9	Before completion of tuning, a run command has been turned OFF. Or during tuning, terminal command ***STOP*** ("Force to stop") or ***BX*** ("Coast to a stop") has been entered. ➔ Do not stop the inverter running until completion of tuning.
Overcurrent error	6 10	During tuning, an excessively large current has flown. ➔ • Check the condition of the mechanical brake. Also check whether the motor is mechanically capable of rotating. • Check whether the torque boost value is high and the current value is abnormally large at slow speed. • Check whether the acceleration time setting is short and the current limiter is operating.
Undervoltage	11	If DC intermediate voltage is low and tuning is performed. ➔ Check whether the main power is input normally.
Tuning frequency error (only when P04=2)	13	The maximum frequency or the frequency limiter (high) has limited the output frequency. ➔ Increase the F03 and F15 settings to values greater than 50% of the base frequency 1 (F04).
Acceleration time timeout (only when P04=2)	18	The output frequency has not reached 50% of the base frequency within the specified acceleration time "F07×300%". ➔ Increase the F07 setting.

For error subcodes, refer to Chapter 3 "3.4.6 Reading alarm information "Alarm Information: 6.AL"".
If any of these errors occurs, remove the error cause and perform tuning again, or consult your Fuji Electric representative.

Note

If a filter other than the Fuji output filter (option) (OFL-□□□-4A) is connected to the inverter's output (secondary) circuit, the tuning result cannot be assured.

Vibration that may occur when the motor's coupling is elastic can be regarded as normal vibration due to the output voltage pattern applied in tuning. The tuning does not always result in an error; however, run the motor and check its running state.

4.8.2 Synchronous motor operation

[1] If running the motor with sensorless vector control (synchronous motors)

Configuring the function codes of motor parameters

If using “Sensorless vector control (F42 = 15)”, it is necessary to set the basic function codes below.

Configure the function codes listed below according to the motor ratings and design values of the machine. For the motor ratings, check the ratings printed on the motor's nameplate. For design values of the machine, ask system integrators or machine manufacturers about them.

For details on how to modify the function code data, see Chapter 3 “3.4.1 Setting function codes “Data Setting: I.F_ _ to I.P_ _””.

Fuji standard synchronous motor (GNB2, GNP1 series)

(1) Setting the motor basic constants

Table 4.8-10

Function code	Name	Function code data	Factory default
F 26	Motor sound (carrier frequency)	2 kHz or more	2 kHz
F 42	Drive control selection 1	15: Sensorless vector control (synchronous motors)	0: V/f control without slip compensation
P 99	Motor 1 selection	21: Fuji synchronous motor (GNB2 series) 23: Fuji synchronous motor (GNP1 series) If 15 is not set for F42, 21 or 23 cannot be set for P99.	Please refer to Table 4.4-1 Initial value for each destination
P 02	Motor 1 (Rated capacity)	Applicable motor capacity	Standard applicable motor capacity
P 30	Synchronous motor 1 (magnetic pole position detection method)	Motor type and starting method 1: IPM	1: IPM
F 03	Maximum frequency 1	Machine design values **(Note)** For the test run of the motor, increase values so that they are longer than your machine design values. If the specified time is short, the inverter may not run the motor properly.	Please refer to Table 4.4-1 Initial value for each destination
F 15	Frequency limiter (upper limit)		70.0 (Hz)
F 07	Acceleration time 1 (Note)		FRN0115G2S-2G/ FRN0060G2■-4G or below: 6.00 (s) FRN0146G2S-2G/ FRN0085G2■-4G or above: 20.00 (s)
F 08	Deceleration time 1 (Note)		

(2) Initializing motor constants

After setting the basic motor constants, motor constants are automatic set for each function code by initializing the motor constants with H03 = 2.

* If H03 is changed, double key operation with the "STOP key + ▲/▼ keys” is necessary.

* After initialization, the data of function code H03 automatically returns to “0” (Factory default value).

For details on how to make changes to function code data, refer to Chapter 3 “3.4.1 Setting up function codes “Data Setting: I.F_ _ to I.P_ _””.

Fuji non-standard motors, motors of other companies

(1) Selection of PMSM type and pole position detection method

Synchronous motors are categorized into the following types based on the structure of the rotor.

a) Surface magnet assembling magnet on rotor surface (SPM: Surface Permanent Magnet)
b) Buried magnet assembling magnet into rotor iron core (IPM: Interior permanent magnet)

The starting magnetic pole position detection method depends on the motor type. In most cases, the IPMs are generally used, but the SPMs are sometimes used. Check the specifications with the motor manufacturer before using synchronous motors.

Set the Initial magnetic position detection mode to the function code P30. For details, refer to Chapter 5 “5.3.4 P codes (Motor 1 parameters)”.

If the motor type is unknown, set P30 = 0.

(2) Setting the motor basic constants

To drive other manufacturer’s synchronous motor, set the motor parameters shown in Table 4.8 2 and execute offline tuning. Check the motor parameters on the motor rating nameplate or consult with the motor manufacturer before setting them.

Note Depending on the order, there may be cases where motor constants for synchronous motors are set individually when the product is shipped. Please note that by initializing data using with H03, motor constant data will be lost. Record the motor constants prior to initialization.

Set motor constants after selecting sensorless vector control with F42 = 15.

Set the motor constants shown in the following table. The setting values are determined by the values on the motor nameplate and machine specifications. Check the nameplate values and machine specifications beforehand.

Table 4.8-11

Function code	Name	Function code data	Factory default
F 26	Motor sound (carrier frequency)	Check the motor specifications and set.	2 kHz
F 42	Drive control selection 1	15: Sensorless vector control	0: V/f control without slip compensation
P 99	Motor 1 selection	20: Other motors (synchronous motors) If 15 is not set for F42, 20 cannot be set for P99.	Please refer to Table 4.4-1 Initial value for each destination
F 04	Base frequency 1	Motor ratings (printed on the nameplate of the motor) If the motor synchronous speed is known, calculate F04 by the following formula and set it. $\frac{\text{Synchronous speed}}{120} \times \text{No. of poles}$	
F 05	Rated voltage at base frequency 1		
P 01	Motor 1 (No. of poles)		4 (poles)
P 02	Motor 1 (Rated capacity)		Standard applicable motor capacity
P 03	Motor 1 (Rated current)		Please refer to Table 4.4-1 Initial value for each destination
P 30	Synchronous motor 1 □ (magnetic pole position detection method)	Motor type and starting method If 0: Rotor structure (magnet layout) is unknown: 1: IPM 2: SPM 3: IPM (current draw method) 4: High-frequency superimposing method	1: IPM

Table 4.8-11 Cont.

Function code	Name	Function code data	Factory default
P 63	Synchronous motor 1 (induced voltage)	Value described in motor test report If the value is unknown, execute rotation tuning.	Fuji standard synchronous motor (GNB2 series) constant
P 64	Synchronous motor 1 (iron loss factor)	Set “the iron loss described in motor test report divided by Motor rated capacity: P 02”. Set 0%, if the iron loss is unknown.	Fuji standard synchronous motor (GNB2 series) constant
P 90	Synchronous motor 1 (overcurrent protection level)	Set the demagnetization limit current. Set to prevent demagnetizing the motor. If it is unknown, set approx. 200% of motor rated current.	Fuji standard synchronous motor (GNB2 series) constant
F 03	Maximum frequency 1	Machine design values **(Note)** For the test run of the motor, increase values so that they are longer than your machine design values. If the specified time is short, the inverter may not run the motor properly.	Please refer to Table 4.4-1 Initial value for each destination
F 15	Frequency limiter (upper limit)		70.0 (Hz)
F 07	Acceleration time 1 (Note)		FRN0115G2S-2G/FRN0060G2■-4G or below: 6.00 (s) FRN0146G2S-2G/FRN0085G2■-4G or above: 20.00 (s)
F 08	Deceleration time 1 (Note)		

(3) Performing tuning (synchronous motors)

Perform tuning in accordance with the "4.8.2 [3] Synchronous motor tuning method”.

Note If a filter other than the Fuji optional output filter (OFL-□□□-□A) is connected to the inverter's output (secondary) circuit, the tuning result cannot be assured.

Vibration that may occur when the motor's coupling is elastic can be regarded as normal vibration due to the output voltage pattern applied in tuning. The tuning does not always result in an error; however, run the motor and check its running state.

[2] If driving the motor under vector control with sensor (synchronous motors)

Configuring the function codes concerning a PG (pulse generator) and PG signals

If using “Vector control with sensor (F42 = 16)”, it is necessary to set the following function codes in order to receive receipt speed feedback value from the encoder.

For details on how to modify the function code data, see Chapter 3 “3.4.1 Setting function codes “Data Setting: 1.F__ to 1.P__””.

Table 4.8-12

Function code	Name	Function code data	Factory default
d 14	PG option Ch2 *2 (Pulse input format)	2: A, B phase 90° phase difference (B phase lead) + Z-phase 3: A, B phase 90° phase difference (A phase lead) + Z-phase 4: A, B phase + U, V, W phase magnetic pole position detection method If using a Fuji standard synchronous motor (GNF2 series), set to 4.	2: A, B phase (B phase lead)
d 15	PG option Ch2 *2 (Encoder pulse resolution)	Set “Pulse number of the target motor encoder” in hexadecimal notation.(Displayed in decimal notation on the multi-function keypad) 0400 HEX/1024 P/R	0400 HEX

*2 If performing synchronous motor control, the motor runs based on encoder input at the speed feedback side.

Note If the rotation direction/speed detection signal from the encoder does not match with the motor rotation direction, excessive current is applied. In the case of the vector control with sensor (F42=16), the motor does not reach the set frequency but rotates slowly at very low speed. In this case, check that the phase order of motor wires is correct and the encoder wires are correctly connected and are not broken.

Tip In 4_17 to 4_18 of I/O check, the number of feedback pulses per second of AB phase and Z phase can be checked. In 3_29 of the drive monitor, the frequency [Hz] calculated from the speed detection signal from the encoder can be checked. These are displayed regardless of the control method if the PG option card is mounted and the encoder is wired.

Fuji regards the CCW as the forward rotation direction viewed from the motor output shaft as shown in Figure 4.8 2. During rotation in the forward direction, the PG output pulse forms a forward rotation signal (B phase leads by 90 degrees) as shown in Figure 4.8 2, and during rotation in the reverse direction, a reverse rotation signal (A phase lead s by 90 degrees).

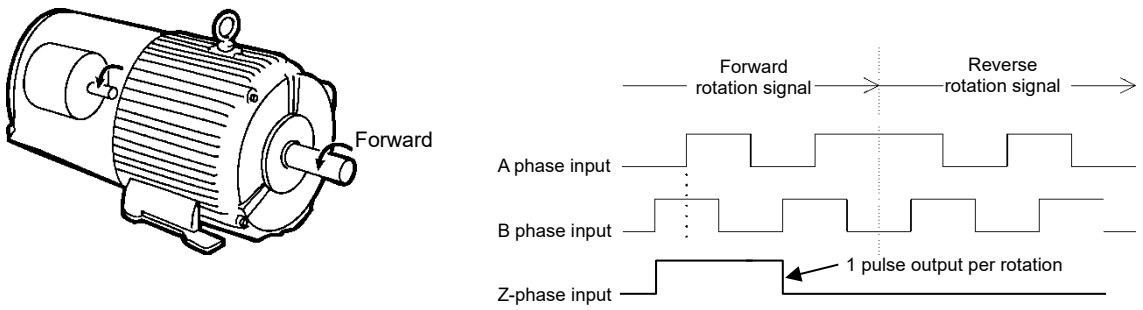

Fig.4.8-3

Note In the case of using motors which comply with IEC standard, their rotation directions are opposite to that in Figure 4.8 2.

The motor rotation directions are as shown on the right when using the A, B phase + U, V, W phase magnetic pole position detection method.

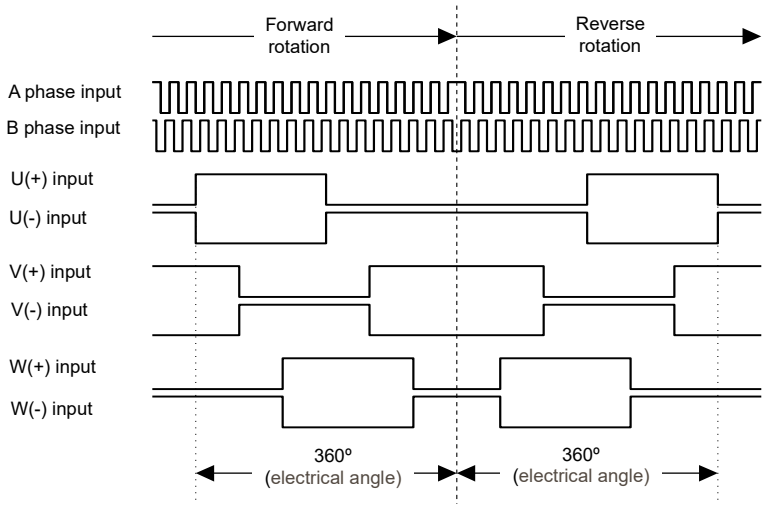

Configuring the function codes of motor parameters

If using “Vector control with sensor (F42 = 16)”, it is necessary to set the basic function codes below.

Configure the function codes listed below according to the motor ratings and design values of the machine. For the motor ratings, check the ratings printed on the motor's nameplate. For design values of the machine, ask system integrators or machine manufacturers about them.

For details on how to modify the function code data, see Chapter 3 “3.4.1 Setting function codes “Data Setting: 1.F__ to 1.P__””.

Fuji standard synchronous motor (GNF2 series)

(1) Setting the motor basic constants

Table 4.8-13

Function code	Name	Function code data	Factory default
F 26	Motor sound (carrier frequency)	2 kHz or more	2 kHz
F 42	Drive control selection 1	16: Vector control with speed sensor	0: V/f control without slip compensation
P 99	Motor 1 selection	22: Fuji synchronous motor (GNF2 series) If 16 is not set for F42, 22 cannot be set for P99.	Please refer to Table 4.4-1 Initial value for each destination
P 02	Motor 1 (Rated capacity)	Applicable motor capacity	Standard applicable motor capacity
P 30	Synchronous motor 1 (magnetic pole position detection method)	Motor type and starting method 1: IPM	1: IPM
d 01	Speed control 1 (Speed command filter)	Speed controller characteristics *1: By setting “15” or “16” for function code F42, the numerical value on the right is automatically set, but in the case of vector control with sensor, the sensitivity can be increased, and therefore it is necessary to start after changing the default value to the value below. d 01 = 0.020(s)	0.200 (s) *1
d 02	(Speed detection filter)	d 02 =0.005(s)	0.025(s) *1
d 03	P (Gain)	d 03 =10.0(times)	2.0 (times) *1
d 04	I (Integral time)	d 04 =0.100(s)	0.600 (s) *1
F 03	Maximum frequency 1	Machine design values **(Note)** For the test run of the motor, increase values so that they are longer than your machine design values. If the specified time is short, the inverter may not run the motor properly.	Please refer to Table 4.4-1 Initial value for each destination
F 15	Frequency limiter (upper limit)		70.0 (Hz)
F 07	Acceleration time 1 (Note)		FRN0115G2S-2G/FRN0060G2■-4G or below: 6.00 (s) FRN0146G2S-2G/FRN0085G2■-4G or above: 20.00 (s)
F 08	Deceleration time 1 (Note)		

(2) Initializing motor constants

After setting the basic motor constants, motor constants are automatic set for each function code by initializing the motor constants with H03 = 2.

* To change the data of function code H03, double key operation "STOP key + ▲/▼ key” is necessary.
* After initialization, the data of function code H03 automatically returns to “0” (Factory default value).

📖 For details on how to make changes to function code data, refer to Chapter 3 “3.4.1 Setting function codes “Data Setting: 1.F_ _ to 1.P_ _””.

(3) Adjusting the magnetic pole position sensor offset

If using a Fuji standard synchronous motor (GNF2 series), a label indicating the “magnetic pole position” data is affixed to the motor. Set this data for function code P95 (magnetic pole position sensor offset).

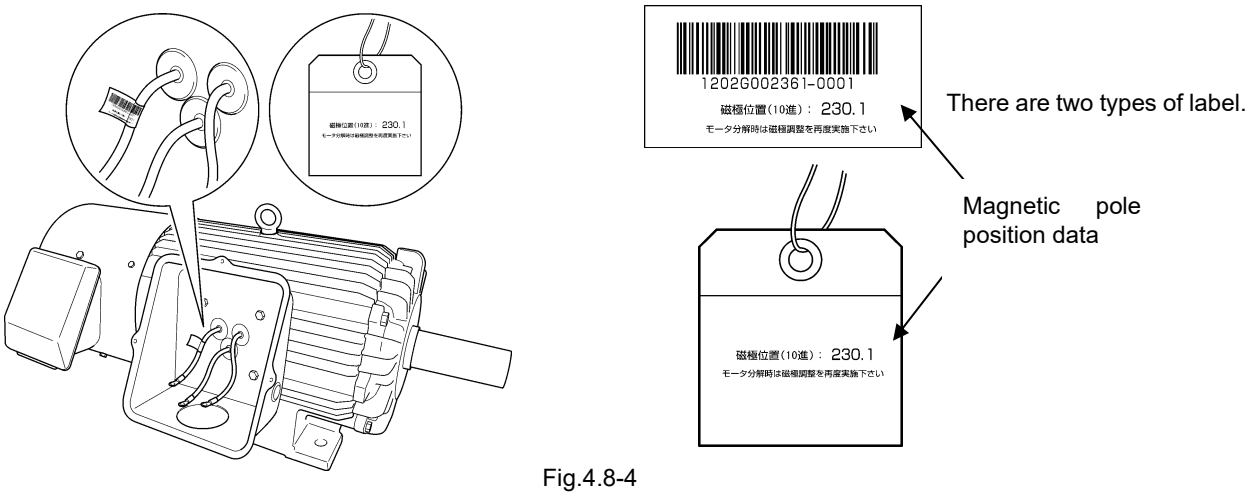

Fig.4.8-4

If the magnetic pole position is unknown, set P04 = 4 with the tuning selection in “4.8.2 [3] Synchronous motor tuning method“, and adjust the magnetic pole position sensor offset.

<u>Fuji non-standard motors, motors of other companies:</u>

(1) Selection of PMSM type and pole position detection method

Synchronous motors are categorized into the following types based on the structure of the rotor.

a) Surface magnet assembling magnet on rotor surface (SPM: Surface Permanent Magnet)
b) Buried magnet assembling magnet into rotor iron core (IPM: Interior permanent magnet)

The starting magnetic pole position detection method depends on the motor type. In most cases, the IPMs are generally used, but the SPMs are sometimes used. Check the specifications with the motor manufacturer before using synchronous motors.

Set the Initial magnetic position detection mode to the function code P30. (For details, refer to Chapter 5 “5.3.4 P codes (Motor 1 parameters).”

If the motor type is unknown, set P30 = 0.

(2) Setting the motor basic constants

To drive other manufacturer's synchronous motor, set the motor parameters shown in Table 4.8 2 and execute offline tuning. Check the motor parameters on the motor rating nameplate or consult with the motor manufacturer before setting them.

Note Depending on the order, there may be cases where motor constants for synchronous motors are set individually when the product is shipped. Please note that by initializing data using with H03, motor constant data will be lost. Record the motor constants prior to initialization.

Set motor constants after selecting vector control with sensor with F42 = 16.

Set the motor constants shown in the following table. The setting values are determined by the values on the motor nameplate and machine specifications. Check the nameplate values and machine specifications beforehand.

Table 4.8-14

Function code	Name	Function code data	Factory default
F 26	Motor sound (carrier frequency)	Check the motor specifications and set.	2 kHz
F 42	Drive control selection 1	16: Vector control with speed sensor for PM	0: V/f control without slip compensation
P 99	Motor 1 selection	20: Other motors (synchronous motors) If 15 is not set for F42, 20 cannot be set for P99.	Please refer to Table 4.4-1 Initial value for each destination
F 04	Base frequency 1	Motor ratings (printed on the nameplate of the motor) If the motor synchronous speed is known, calculate F04 by the following formula and set it. $\frac{\text{Synchronous motor}}{120} \times \text{No. of poles}$	
F 05	Rated voltage at base frequency 1		
P 01	Motor 1 (No. of poles)		4 (poles)
P 02	Motor 1 (Rated capacity)		Standard applicable motor capacity
P 03	Motor 1 (Rated current)		Please refer to Table 4.4-1 Initial value for each destination
P 30	Synchronous motor 1 (magnetic pole position detection method)	Motor type and starting method If 0: Rotor structure (magnet layout) is unknown: 1: IPM 2: SPM 3: IPM (current draw method) 4: High-frequency superimposing method	1: IPM
P 63	Synchronous motor 1 (induced voltage)	Value described in motor test report If the value is unknown, execute rotation tuning.	Fuji standard synchronous motor (GNB2 series) constant
P 64	Synchronous motor 1 (iron loss factor)	Set "the iron loss described in motor test report divided by Motor rated capacity: P 02". Set 0%, if the iron loss is unknown.	Fuji standard synchronous motor (GNB2 series) constant
P 90	Synchronous motor 1 (overcurrent protection level)	Set the demagnetization limit current. Set to prevent demagnetizing the motor. If it is unknown, set approx. 200% of motor rated current.	Fuji standard synchronous motor (GNB2 series) constant

Table 4.8-14 Cont.

Function code	Name	Function code data	Factory default
d 01	Speed control 1 (Speed command filter)	Speed controller characteristics *1: By setting “15” or “16” for function code F42, the numerical value on the right is automatically set, but in the case of vector control with sensor, the sensitivity can be increased, and therefore it is necessary to start after changing the default value to the value below. d 01 = 0.020(s)	0.200 (s) *1
d 02	(Speed detection filter)	d 02 =0.005(s)	0.025(s) *1
d 03	P (Gain)	d 03 =10.0(times)	2.0 (times) *1
d 04	I (Integral time)	d 04 =0.100(s)	0.600 (s) *1
F 03	Maximum frequency 1	Machine design values **(Note)** For the test run of the motor, increase values so that they are longer than your machine design values. If the specified time is short, the inverter may not run the motor properly.	Please refer to Table 4.4-1 Initial value for each destination
F 15	Frequency limiter (upper limit)		70.0 (Hz)
F 07	Acceleration time 1 (Note)		FRN0115G2S-2G/FRN0060G2■-4G or below: 6.00 (s) FRN0146G2S-2G/FRN0085G2■-4G or above: 20.00 (s)
F 08	Deceleration time 1 (Note)		

(3) Performing tuning (synchronous motors)

Perform tuning in accordance with the "4.8.2 [3] Synchronous motor tuning method”.

[3] Synchronous motor tuning method

If performing tuning, do so using the following procedure after specifying settings based on the control method indicated in 4.7.1 [1] to [2].

■ Selection of tuning type

Check the situation of the machine and select either “Tuning with the motor stopped (P04 = 1)” or “Tuning with the motor running (P04 = 2).”
Furthermore, if only adjusting the magnetic pole position sensor offset, select rotation tuning (P04 = 4).
For the latter tuning, adjust the acceleration and deceleration times (F07 and F08) and specify the rotation direction that matches the actual rotation direction of the machine.

Note

It is not possible to perform stop tuning (P04 = 1) with P30 set to 0 or 3. In this case the alarm Er7 with subcode 21 occurs.

When performing magnetic pole position sensor offset tuning, the motor rotates in both the forward and reverse directions. If not wishing to rotate the motor in the reverse direction due to machine restrictions, set the rotation direction control function (H08) to 1 (reverse rotation prevention).

Magnetic pole position sensor offset tuning does not work for A, B, or Z-phase type PG sensors.

Table 4.8-15

P04 data		Motor parameters subjected to tuning	Tuning	Select under the following conditions
1	Tune while the motor stops.	Armature resistance (P60) d-axis inductance (P61) q-axis inductance (P62) Reserved (P84, P88)	Tuning with the motor stopped.	- Impossible to rotate the motor e.g., when a mechanical load has already been applied to the motor). - P30 is set to “1” or “2 (see note above).
2	Tune while the motor is rotating	Armature resistance (P60) d-axis inductance (P61) q-axis inductance (P62) Induced voltage (P63) Reserved (P84, P88)	Tuning the armature resistance, d-axis inductance, q-axis inductance, and parameter values (P84 and P88) with the motor stopped. Tuning the induced voltage with the motor running at 50 % of the base frequency.	- Possible to rotate the motor, provided that it is safe.
		Magnetic pole position sensor offset (P95)	Tuning the magnetic pole position sensor offset with motor rotating (speed set with d80)	Perform only if using vector control with sensor (synchronous motor) (F42 =16) using an A, B phase + U, V, W phase magnetic pole position detection method (d14 = 4) encoder.
4	Rotation tuning	Magnetic pole position sensor offset (P95)	Tuning the magnetic pole position sensor offset with motor rotating (speed set with d80)	Perform if tuning the magnetic pole position sensor only. Select PM vector control with sensor (P42 = 16).

The tuning results of motor parameters will be automatically saved into their respective function codes.

■ Preparation of machine

In preparation for tuning, remove the motor coupling with the load and deactivate the safety devices before rotation tuning.

■ **Tuning procedure**

1) Set function code P04 to “1”, “2”, or “4”, and press the FUNC/DATA key.
   (The 1 and 2, or 4 indicator will blink slowly.)
2) Enter a run command.
   (The factory default is forward rotation with the keypad RUN key.)
   (To switch to reverse rotation or to select the terminal signal ***FWD*** or ***REV*** as a run command using the keypad, change the data of function code F02.)
3) By entering a run command, tuning is started, and the progress status is displayed as a percentage (%).
4) If function code P04 = 2 (rotation tuning), tuning is performed by rotating the motor to 50% of the base frequency, and if function code P04 = 4 (magnetic pole position sensor offset tuning), tuning is performed by rotating the motor at 1 Hz (factory default).
   After measurement, the motor decelerates to stop.
5) If the terminal signal ***FWD*** or ***REV*** is selected as a run command (F02 = 1), “End” appears upon completion of measurement. Turning the run command OFF completes the tuning. If the run command has been given through the keypad or the communications link, it automatically turns OFF upon completion of the measurements, which completes the tuning.
6) Upon completion of tuning, the next function code appears on the keypad.

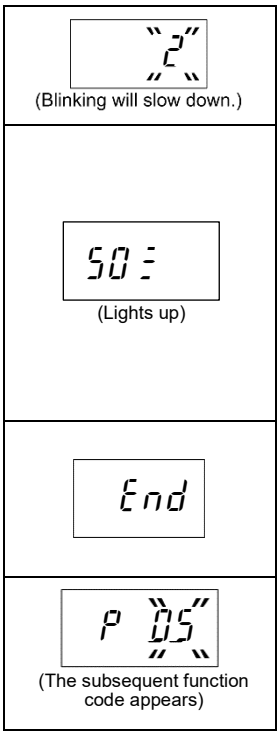

Note The initial setting for the speed regulator (ASR) is rather low to prevent hunting. However, hunting may occur during tuning due to mechanical conditions. If so, a tuning error (Er7) or speed mismatch (ErE) may occur. When Er7 occurs, lower the speed control gain, and when ErE occurs, cancel the speed mismatch detection (d23 = 0), and then perform tuning again.

■ Tuning errors (synchronous motors)

Improper tuning would negatively affect the operation performance and, in the worst case, could even cause hunting or deteriorate precision. Therefore, if the inverter finds any abnormality in the tuning results or any error in the tuning process, it displays Er7 and discards the tuning data.

When the tuning error (Er7) appears, check that:

- The inverter's output (secondary) circuit is not opened.
- The mechanical brake is released.
- The terminal command ***BX*** (“Coast to a stop”) is ON.
- Any function code is wrongly configured.

Listed below are possible causes that trigger tuning errors and measures.

Table 4.8-16

Possible tuning error causes	Er7 error subcode	Details and measures
Sequence error	7 8 9	Before completion of tuning, a run command has been turned OFF. Or during tuning, terminal command ***STOP*** (“Force to stop”) or ***BX*** (“Coast to a stop”) has been entered. ➔ Do not stop the inverter running until completion of tuning.
Overcurrent error	6 10	During tuning, an excessively large current has flown. ➔ Release a mechanical brake or take any other measure to remove the cause resulting in overcurrent. ➔ Check whether the acceleration time setting is short and the current limiter is operating.
Undervoltage	11	If DC intermediate voltage is low and tuning is performed. ➔ Check whether the main power is input normally.
Tuning frequency error (only when P04=2)	13	The maximum frequency or the frequency limiter (high) has limited the output frequency. ➔ Increase the F03 and F15 settings to values greater than 50% of the base frequency 1 (F04).
Acceleration time timeout (only when P04=2)	18	The output frequency has not reached 50% of the base frequency within the specified acceleration time “F07×300%”. ➔ Increase the F07 setting.
Control method error	21	When P30 is set to 0 or 3, it is necessary to rotate the motor in order to perform magnetic pole position tuning, but if P04 = 1 (stop tuning) is performed with this setting, or If P04 = 5 (stop tuning) is performed with F42 = 15: ➔ Set to the correct combination.
Parameter setting error	5003	The rated impedance or rated inductance is out of the effective range. ➔ Check the F04, F05 and P03 settings.
Magnetic pole position calculation failure	5005	When P30 = 1 or 3: The saliency ratio of the motor inductance is low. When P30 = 2: The motor has no magnetic saturation characteristic. ➔ If this error occurs when P30 = 1, decrease the P87 setting. Note that it may fail to tune the motor that does not easily cause magnetic saturation. ➔ If this error occurs when P30 = 2 or 3, change the P30 setting to “0” and adjust the F24 setting (Starting Frequency 1, Holding time) by gradually increasing it in increments of 0.5 to 5.0 s until rotational tuning succeeds.
Lack of magnetic saturation	5056	The magnetic saturation characteristic of the motor is low so that the inverter has failed to discriminate the magnetic pole position. ➔ Gradually increase the P87 setting up a maximum of 120%. If it produces no effect, change the P30 setting to “0” or “3,” and the F24 setting to 0.5 to 5.0 s.
Excessive magnetic saturation	5057	If there is a risk of danger because the magnetic saturation characteristic of the motor is high so that an excessively large current could flow at the discrimination time of the magnetic pole position: ➔ Decrease the P87 setting.

Possible tuning error causes	Er7 error subcode	Details and measures
Error in tuning results	5059 to 5065	An interphase voltage unbalance or output phase loss has been detected during tuning. Or tuning has resulted in an abnormally high or low value due to the output circuit opened. ➔ Check that there is no abnormality in the wiring between the inverter and motor. ➔ If a magnetic contactor (MC) is inserted between the inverter and motor, check that it is closed.

📖 Refer to Chapter 3 “3.4.6 Reading alarm information “Alarm Information: 6.AL”” for details on how to check error subcodes.

📖 If an error other than Er7 occurs, refer to “Chapter 6 “TROUBLESHOOOTING”” and eliminate the cause.

If any of these errors occurs, remove the error cause and perform tuning again, or consult your Fuji Electric representative.

4.8.3 Motor temperature protection setting

[1] Electronic thermal overload relay (for motor 1 protection)

The inverter is equipped with an electronic thermal overload relay protective function which is activates (OL1). Output current inside the inverter is monitored, and if the motor is run at greater current value than that for which a long time is set, the protective function (OL1) is triggered. This function is used to protect the motor from overheating due to excessive motor loads.

Set based on the characteristics of the motor being used.

Function code F10*: Select motor characteristics (1: self-cooling fan (factory default), 2: separately excited fan (inverter motor, etc.)),

F11*: Operation level (set motor rated current x 1.0 to 1.1, factory default is Fuji standard motor rated current value),

F12*: Thermal time constant (time that motor runs at 150% of operation level)

Refer to Chapter 5 "5.3.1 F codes (Fundamental functions)" for details. For motors 2 to 4, set with function codes A, b, and r.

Note It is not possible to provide protection for individual motors when multiple motors are connected to a single inverter. Individual protection should therefore be provided using thermal overload relays.

[2] Motor protection with thermistor

If the motor is equipped with a built-in PTC NTC type thermistor for temperature detection, the motor temperature is detected directly, offering temperature protection by inputting the signals from these devices to control terminals [V2] and [11].

Connection method

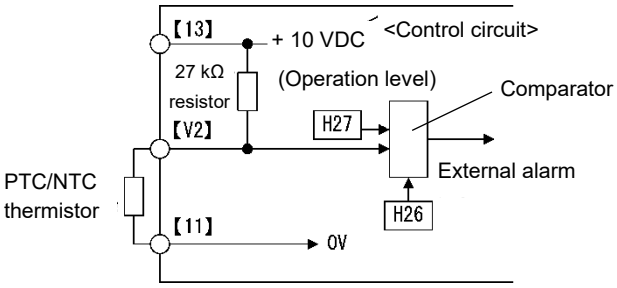

Fig.4.8-5

Note When using the terminal [V2] for PTC/NTC thermistor input, also set SW5 on the control printed circuit board to the PTC/NTC side.

Function code H26*: 0: No operation
1: PTC thermistor (protection stopped with OH4)
2: PTC thermistor (warning output)
3: NTC thermistor (protection stopped with OH4)

H27*: Operation level

Set the operating voltage Vv2 obtained with the following calculation for H27*.

$V_{V2}=\frac{Rp}{27000+Rp} \times 10.5\ (V)$ Vv2: Operating voltage, Rp: Thermistor operating resistance

Refer to Chapter 5 “5.3.5 H codes (High performance functions)” for details.

4.9 Setting function codes when switching from a conventional model

Use the following procedure to set function codes when switching from a Fuji general-purpose inverter (FRENIC-MEGA (G1S), FRENIC5000G11S/P11S, FRENIC5000G9S/P9S) to FRENIC-MEGA (G2S).

4.9.1 Switching from FRENIC-MEGA (G1S)

The keypad copy function can be used to set function codes easily by reading function codes from conventional models FRENIC-MEGA (G1S) and copying them to the FRENIC-MEGA (G2S).

If function codes are copied with the keypad function codes that are partially different are automatically read and copied. If performing function code operations using RS-485 or any form of bus communication, function code y96 (G1 compatibility mode) should also be set.

[1] Copying function codes using the keypad

(1) Preparation for copying function codes to MEGA (G2S)

- G2S function codes that do not exist in the G1S cannot be rewritten. If the G2S settings for the copy destination are unknown, it is recommended that settings be copied after first returning settings to the factory default status.
- If using a Multi-function keypad with liquid crystal display (TP-G1-☐) to copy from G1 to G2, set function code K96 (TP-G1 compatibility mode) to 0 (G1) on G2 in advance.
- There are function codes that cannot be copied when terminals [FWD] and [REV] are ON. Turn OFF terminals [FWD] and [REV] for the MEGA (G2) to which function codes are copied.

(2) Read G1S data with the keypad on the existing MEGA (G1S).

Press the (PRG/RESET) key.

↓

Press (∧) to display "7.CPY".

↓

Press the (FUNC/DATA) key to display "r-EAd".

↓

Press the (FUNC/DATA) key to start reading. "End" appears when reading is complete.

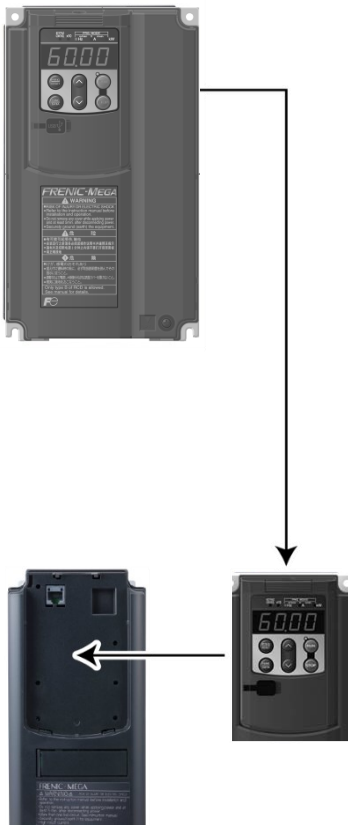

(3) Install the G1S keypad on the new FRENIC-MEGA (G2) and write data.

Press the (PRG/RESET) key.

↓

Press (∧) to display "7.CPY".

↓

Press the (FUNC/DATA) key, and press (∧) to display "CoPY".

↓

Press the (FUNC/DATA) key to start copying. "End" appears when copying is complete.

📖 Functions codes can also be copied in the same way using the FRENIC-MEGA (G2S) keypad.
Refer to Chapter 3 "3.4.7 Copying data "Data Copying: 7.CPY"" for details on how to copy data.

[2] Entering function codes directly from the keypad

FRENIC-MEGA (G2S) function codes are generally compatible with FRENIC-MEGA (G1S) function codes, and the FRENIC-MEGA (G2S) can be used by setting the existing G1S setting values for the same function codes on the G2S. Furthermore, additional function codes are compatible with the G1S by default, and therefore there is no need to change settings.

📖 Some function codes are incompatible. If using these, it will be necessary to change the settings.

[3] Entering function codes from PC Loader

The MEGA series **keypad** is equipped with a USB port, allowing it to be easily connected to a PC. This allows data to be read and copied using the PC Loader software.

PC Loader can be downloaded free of charge from the Fuji Electric website. Refer to the PC Loader software instruction manual for details on how to use it.

4.9.2 Switching from FRENIC5000G11S/P11S or FRENIC5000G9S/P9S

Function codes and data for the FRENIC-MEGA (G2S) differ from the models above. Set function codes from the keypad.

4.10 Operation Check

After completion of preparations for a test run as described above, start running the inverter for motor operation check using the following procedure.

⚠WARNING

If the user configures the function codes wrongly without completely understanding this User's Manual, the motor may rotate with a torque or at a speed not permitted for the machine.

Failure to observe this could result in an accident or injury.

⚠CAUTION

If any abnormality is found in the inverter or motor, immediately stop operation and investigate the cause referring to Chapter 6 “TROUBLESHOOTING.”

4.10.1 Test run procedure

If set at "4.9 Setting function codes when switching from a conventional model”, operation may start at the predetermined high frequency when the power is turned ON, and therefore it is recommended that the initial test run be performed at a low frequency.

The method used to set the factory default frequency from the keypad, and the test run method with run command entered is shown below.

(1) Turn the power ON and check that the reference frequency 0.00 is blinking on the LED monitor.

(2) Set a low reference frequency such as 5 Hz, using ▲/▼ keys.
(Check that the frequency is blinking on the LED monitor.)

(3) Press the RUN key to start running the motor in the forward direction.
(Check that the reference frequency is lit on the LED monitor.)

(4) To stop the motor, press the STOP key.

4.10.2 Check points during a test run

(1) Check that the motor is running in the forward direction.

(2) Check for smooth rotation without motor humming or excessive vibration.

(3) Check for smooth acceleration and deceleration.

When no abnormality is found, press the RUN key again to start driving the motor, then increase the reference frequency using ▲/▼ keys. Check the above points again.

Tip Depending on the settings of function codes, the motor speed may rise to an unexpectedly high and dangerous level, particularly, under vector control with sensor. To avoid such an event, the speed limiting function is provided.

If the user is unfamiliar with the function code settings (e.g., when the user starts up the inverter for the first time), it is recommended that the “F15: Frequency limiter (Upper limit)” and the torque control “d32: Speed limit 1” and “d33: Speed limit 2” are used. At the startup of the inverter, to ensure safer operation, specify small values to those function codes at first and gradually increase them while checking the actual operation.

The speed limiting function serves as an overspeed level barrier, or as a speed limiter under torque control.

For details on the speed limiting function, refer to Chapter 5 “FUNCTION CODES”.

Tip If performing sensorless vector control (synchronous motors) and P30 is set to other than “0”, noise that may occur from the motor at the start of running can be regarded as normal.

4.10.3 Adjusting the function code for motor control

Adjusting the current function code data sometimes resolve issues such as insufficient torque or overcurrent. Table 4.9 1 lists the major function codes to be accessed.

Refer to Chapter 5 “FUNCTION CODES” and Chapter 6 “TROUBLESHOOTING” for details.

Table 4.10-1

Function code	Name	How to adjust	Control method	
			Induction motor	Synchronous motor
F 07	Acceleration time 1	If the current limiter is activated due to a short acceleration time and large drive current, prolong the acceleration time.	V/f vector	With sensor Sensorless
F 08	Deceleration time 1	If an overvoltage trip occurs due to a short deceleration time, prolong the deceleration time.	V/f vector	With sensor Sensorless
F 09*	Torque boost 1	If the starting motor torque is deficient under V/f control mode, increase the torque boost. If the motor with no load is overexcited (current increasing), decrease the torque boost.	V/f	-
F 44	Current limiter (Level)	If the stall prevention function is activated by the current limiter during acceleration or deceleration, increase the operation level.	V/f	-
P 07*	Motor 1 (%R1)	If the starting motor torque is insufficient under automatic torque boost and torque vector control, increase %R1. If the motor with no load is over-excited (current increasing), decrease %R1.	V/f vector	-
P 09*	Motor 1 (Slip compensation gain for driving)	For excessive slip compensation during driving, decrease the gain; for insufficient one, increase the gain.	V/f (sensorless) (sensorless vector)	-
P 11*	Motor 1 (Slip compensation gain for braking)	For excessive slip compensation during braking, decrease the gain; for insufficient one, increase the gain.		
H 07	Curve acceleration/deceleration	If overshoot to the change in speed command is large, make curve acceleration/deceleration speed effective.	V/f vector	With sensor Sensorless
H 69	Anti-regenerative control	If an overvoltage alarm occurs without a braking resistor, enable the anti-regenerative control function.	V/f vector	-
H 80*	Output current fluctuation damping gain for motor 1	If motor current vibration occurs, adjust in the direction that increases the damping gain.	V/f	-

If there is no improvement by adjusting the above function codes when performing V/f control with sensor, with sensor/sensorless vector control, with sensor/sensorless vector control for synchronous motors, adjust the following function codes also. In the above control methods, PI regulator is used for speed control. The desired response can be obtained by adjusting the control constants (PI constants) to match the load inertia. The major function codes to adjust are shown below.

Table 4.10-2

Function code	Name	How to adjust
d 01*	Speed control 1 (Speed command filter)	If an excessive overshoot or undershoot occurs for a speed command change, increase the filter constant. If motor response is slow for a speed command change, decrease the filter constant.
d 02*	Speed control 1 (Speed detection filter)	If ripples are superimposed on the speed detection signal so that the speed control gain cannot be increased, increase the filter constant to obtain a larger gain. It is not necessary to change the factory default normally.
d 03*	Speed control 1 P (Gain)	If hunting is caused in the motor speed control, decrease the gain. If speed mismatch or excessive speed deviation (ErE) occurs because the motor response is slow, increase gain.
d 04*	Speed control 1 I (Integral time)	If speed mismatch or excessive speed deviation (ErE) occurs because the motor response is slower, decrease the integration time. If the load inertia is large, increase the integration time.

4.11 Selecting a Frequency Command Source

Factory default run commands are set from the keypad. A setting example for frequency command input methods other than this is shown below.

4.11.1 Setting the frequency from the keypad

Follow the procedure given below.

(1) Configure the function codes as listed below.

Table 4.11-1

Function code	Name	Function code data	Factory default
F01	Frequency setting 1	0: Keypad operation (▲/▼ keys)	0

Note

- When the keypad is set to Programming or Alarm mode, the ▲/▼ keys are disabled to modify the reference frequency. You need to switch to Running mode to enable frequency setting with the ▲/▼ keys.
- If any of higher priority frequency command sources (multistep frequency commands and frequency commands via communications link) is specified, the inverter may run at an unexpected frequency.

(2) Press the ▲/▼ key to display the current frequency command on the LED monitor. The least significant digit blinks.

(3) To change the frequency command, press the ▲/▼ key again.

If the frequency command is set with the ▲/▼ keys, the least significant digit displayed flashes and the data is changed from the least significant digit and the changing digit gradually shifts to the upper digit.

Tip

- In order to specify settings such as the reference frequency, press the ▲/▼ key once, and when the rightmost digit flashes, press the ▶ key. The flashing digit will then move, making it easy to change large values.

(4) The set frequency command is saved in the inverter's internal memory.

For details on how to modify the function code data, see Chapter 3 "3.4.1 Setting function codes "Data Setting: I.F__ to I.P__"".

4.11.2 Setting the frequency with an external potentiometer (variable resistor)

Follow the procedure given below. Specify the same settings if entering the voltage for analog voltage from another source.

(1) Configure the function codes as listed below.

Table 4.11-2

Function code	Name	Function code data	Factory default
F01	Frequency setting 1	1: Analog voltage input to terminal [12] (0 to ±10 V)	0

Note This function code cannot be changed while the inverter is running. To change the setting for this function code, first stop the inverter.

(2) Connect an external potentiometer to terminals [11] through [13] of the inverter.

If inputting analog voltage, input DC voltage (0 to 10 V) to terminals [11] and [12].

(3) Rotate the external potentiometer to apply voltage to terminal [12] for a frequency command input.

For precautions in wiring, refer to Chapter 2 “INSTALLATION AND WIRING”.

For details on how to modify the function code data, see Chapter 3 “3.4.1 Setting function codes “Data Setting: 1.F__ to 1.P__””.

4.11.3 Setting the frequency with multistep frequency selection (1 speed, 2 speed, etc.)

Follow the procedure given below.

(1) Configure the function codes as listed below.

Table 4.11-3

Function code	Name	Function code data	Factory default
E01 to E09	[X1] to [X9] function selection	0, 1, 2, 3: Multistep frequency selection (1 to 15 steps) [0: SS1, 1: SS2, 2: SS4, 3: SS8]	0, 1, 2, and 3 are assigned to E01 to E04.
C05 to C19	Multistep Frequency 1 to 15	0.00 to 599.0 Hz	0.00

It is possible to change to a predetermined frequency with function codes C05 to C19 (multistep frequency) by switching digital input signals from an external source. By setting data 0 to 3 for the digital input terminals to be assigned, the frequency to be selected is determined with a combination of these input signals.

Table 4.11-4

Combination of set data input signals				Selected frequency	
3□ "SS8"	2□ "SS4"	1□ "SS2"	0□ "SS1"		
OFF	OFF	OFF	ON	C05 (Multistep frequency 1)	Related function codes C05 to C19 Data setting range: 0.00 to 599.0
OFF	OFF	ON	OFF	C06 (Multistep frequency 2)	
OFF	OFF	ON	ON	C07 (Multistep frequency 3)	
OFF	ON	OFF	OFF	C08 (Multistep frequency 4)	
OFF	ON	OFF	ON	C09 (Multistep frequency 5)	
OFF	ON	ON	OFF	C10 (Multistep frequency 6)	
OFF	ON	ON	ON	C11 (Multistep frequency 7)	
ON	OFF	OFF	OFF	C12 (Multistep frequency 8)	
ON	OFF	OFF	ON	C13 (Multistep frequency 9)	
ON	OFF	ON	OFF	C14 (Multistep frequency 10)	
ON	OFF	ON	ON	C15 (Multistep frequency 11)	
ON	ON	OFF	OFF	C16 (Multistep frequency 12)	
ON	ON	OFF	ON	C17 (Multistep frequency 13)	
ON	ON	ON	OFF	C18 (Multistep frequency 14)	
ON	ON	ON	ON	C19 (Multistep frequency 15)	

(2) Connect a multistep frequency setting switch between the X terminals and [CM].

(3) Multistep frequency is selected with a combination that turns ON (shorts) the multistep frequency setting switch.

For precautions in wiring, refer to Chapter 2 "INSTALLATION AND WIRING".

For details on how to modify the function code data, see Chapter 3 "3.4.1 Setting function codes "Data Setting: 1.F__ to 1.P__"".

Note If multistep frequency settings are enabled with the multistep frequency setting switch (between X terminals and [CM] ON (shorted), the frequency setting set at "F01: Frequency setting 1" is disabled.

4.12 Selecting a Run Command Source

A run command source is the keypad (RUN and STOP keys) by factory default.

4.12.1 Setting run commands from the keypad

Follow the procedure given below.

(1) Configure the function codes as listed below.

Table 4.12-1

Function code	Name	Function code data	Factory default
F02	Operation method	0: Keypad operation (Rotation direction input: terminal block) 2: Keypad operation (forward rotation) 3: Keypad operation (reverse rotation)	Please refer to Table 4.4-1 Initial value for each destination

(2) When F02 = 0: Press the RUN key on the keypad to run the motor. Press the STOP key to stop the motor.

The rotation direction is specified with terminals [FWD] and [REV]. Connect the run forward switch between terminals [FWD] and [CM] and the run reverse switch between [REV] and [CM].

(3) When F02 = 2: Press the RUN key on the keypad to run the motor in the forward direction. Press the STOP key to stop the motor.

(4) When F02 = 3: Press the RUN key on the keypad to run the motor in the reverse direction. Press the STOP key to stop it.

For details on how to modify the function code data, see Chapter 3 “3.4.1 Setting function codes “Data Setting: I.F__ to I.P__””.

4.12.2 Setting run commands with external signals (terminal [FWD, [REV])

Follow the procedure given below.

(1) Configure the function codes as listed below.

Table 4.12-2

Function code	Name	Function code data	Factory default
F02	Operation method	1: External digital input signal	Please refer to Table 4.4-1 Initial value for each destination

Note If terminals [FWD] and [REV] are ON (short-circuited), the F02 setting cannot be changed. First turn terminals [FWD] and [REV] OFF, and then change the setting.

(2) Connect the forward rotation command switch between terminals [FWD] and [CM], and connect the reverse rotation command switch between terminals [REV] and [CM].

(3) By turning ON (short circuiting) the run command switches, operation is started.

For precautions in wiring, refer to Chapter 2 “INSTALLATION AND WIRING”.

For details on how to modify function code data, refer to Chapter 3 “3.4.1 Setting function codes “Data Setting: I.F__ to I.P__””.

Chapter 5
FUNCTION CODES

This chapter explains the table of function codes used in FRENIC-MEGA, index per purpose, and the detail of each function code.

Contents

5.1 Function Codes Overview ····· 5-1
5.2 Function Code Tables ····· 5-2
5.2.1 Supplementary note ····· 5-2
5.2.2 Function code tables ····· 5-4
[1] F codes: Fundamental functions ····· 5-4
[2] E codes: Extension Terminal Functions (terminal functions) ····· 5-8
[3] C codes: Control Functions of Frequency (Control function) ····· 5-20
[4] P codes: Motor 1 Parameters (Motor 1 parameters) ····· 5-22
[5] H codes: High Performance Functions (High level functions) ····· 5-24
[6] H1 codes: High Performance Functions (High level functions) ····· 5-28
[7] A codes: Motor 2 Parameters (Motor 2 parameters) ····· 5-30
[8] b codes: Motor 3 Parameters (Motor 3 parameters) ····· 5-33
[9] r codes: Motor 4 Parameters (Motor 4 parameters) ····· 5-35
[10] J codes: Application Functions (Application function) ····· 5-37
[11] J1 codes: Application Functions (Application function) ····· 5-39
[12] J2 codes: Application Functions (Application function) ····· 5-43
[13] J4 codes: Application Functions (Application function) ····· 5-44
[14] J5 codes: Application Functions (Application function) ····· 5-46
[15] J6 codes: Application Functions (Application function) ····· 5-47
[16] d codes: Application Functions 2 (Application functions 2) ····· 5-49
[17] d1 codes: Application Functions 2 (Application functions 2) ····· 5-52
[18] d2 codes: Application Functions 2 (Application functions 2) ····· 5-54
[19] U codes: Customizable logic Functions (Customizable logic Functions) ····· 5-56
[20] U1 codes: Customizable logic Functions (Customizable logic Functions) ····· 5-61
[21] y codes: LINK Functions (Link functions) ····· 5-62
[22] o codes: Option Functions (Option functions) ····· 5-64
[23] o1 codes: Option Functions (Option functions) ····· 5-67
[24] o2 codes: Option Functions (Option functions) ····· 5-68
[25] T codes: Timer Functions (Scheduled operations) ····· 5-69
[26] K codes: Keypad functions (Keypad functions) ····· 5-70
5.3 Description of Function Codes ····· 5-84

5.3.1 F codes (Fundamental functions) 5-84
[1] Setting the frequency with the keypad (F01 = 0 or 8) 5-86
[2] Setting the frequency with analog input (F01 = 1 to 3, 5, 6) 5-87
[3] Frequency setting by digital input signal “UP”/“DOWN” (F01=7) 5-94
[4] Frequency setting using digital input (option DI interface card) (F01 = 11) 5-95
[5] Frequency setting using pulse train input (F01 = 12) 5-96
5.3.2 E codes (Extension terminal functions) 5-155
5.3.3 C codes (Control functions) 5-220
5.3.4 P codes (Motor 1 parameters) 5-232
5.3.5 H codes (High performance functions) 5-243
[1] Measuring the capacitance of DC link bus capacitor in comparison with initial one at shipment 5-263
[2] Measuring the capacitance of DC link bus capacitor under ordinary operating conditions at power shutdown 5-264
5.3.6 H1 codes (High performance functions) 5-286
5.3.7 A, b, r codes (Motor 2 to 4 parameters) 5-294
5.3.8 b, r codes (Speed control 3 and 4 parameters) 5-299
5.3.9 J codes (Applied functions) 5-300
[1] PID command with keypad (J02 = 0, J102, J202 = 0) 5-302
[2] PID command by analog inputs (J02=1, J102 = 1, J202 = 1,2) 5-303
[3] PID command with UP/DOWN control (J02 = 3) 5-304
[4] PID command via communications link (J02 = 4, J102, J202 = 4) 5-305
[5] Overload stop function 5-318
[6] Brake control signal 5-320
5.3.10 J1 codes (Applied functions) 5-327
5.3.11 J2 codes (Applied functions) 5-358
5.3.12 J4 codes (Applied functions) 5-360
[1] Pump control motor drive permission command 1 to 8 for pump control motors (“MEN1” to “MEN8”) 5-385
[2] PID control operation 5-386
[3] Motors subject to motor run time switching 5-391
[4] Canceling the regular switching operation 5-391
[5] Regular switching with input terminal 5-392
5.3.13 J5 codes (Applied functions) 5-400
[1] External PID commands with keypad (J502, J602, J652 = 0) 5-402
[2] External PID commands with UP/DOWN control (J502, J602, 2 = 3) 5-403
[3] External PID commands from communication 5-403
[4] PID commands with analog input (J502, J602, J652＝51) 5-404
5.3.14 J6 codes (Applied functions) 5-427
5.3.15 d codes (Applied functions 2) 5-430
[1] Speed control 5-430
[2] Line speed control 5-440
[3] Master-follower operation 5-443
5.3.16 d1 codes (Applied functions 2) 5-472
[1] Hoist function 5-478
5.3.17 d2 codes (Applied functions 2) 5-485
[1] Position control 5-485
[2] Setting example for conveyor performing sizing by position control 5-502
5.3.18 U codes (Customizable logic operation) 5-512
5.3.19 U1 codes (Customizable logic operation) 5-512

5.3.20 y codes (Link functions) ····· 5-556
5.3.21 o/o1/o2 codes (Option functions) ····· 5-564
5.3.22 T codes Timer Functions (Scheduled operations) ····· 5-565
5.3.23 K codes (Keypad functions) ····· 5-568

5.1 Function Codes Overview

Function codes are used for selecting various functions of FRENIC-MEGA.

Function codes comprise 3 digits or 4 digits of alphanumeric character.

The first digit categorizes the group of function code alphabetically and the subsequent 2 or 3 digits identify each code within the group by number.

Function code comprises 15 groups:

Fundamental functions (F codes),
Terminal functions (E codes),
Control codes (C codes),
Motor 1 parameters (P codes),
High-level functions (H codes), (H1 codes),
Motor 2 parameters (A codes),
Motor 3 parameters (b codes),
Motor 4 parameters (r codes),
Application function 1 (J codes), (J1 codes)
(J2 codes), (J4 codes), (J5 codes) (J6 codes), *101
Application function 2 (d codes), (d1 codes), (d2 codes),
Customizable logic (U codes), (U1 codes),
Link functions (y codes),
Option function (o codes), (o1 codes), (o2 codes),
Schedule operation function (T codes), *101
and Keypad functions (K codes).

The function of each function code is determined according to the data to be set. The following descriptions are for supplementary explanation of function code table. Refer to instruction manual of each option to find the details of the option function (o code, o1 code and o2 code).

*101: Supported with ROM0500 or later.

5.2 Function Code Tables

5.2.1 Supplementary note

■ **Change, reflect, and save function code data during operation**

Function codes are categorized into those which data change is enabled during operation of the inverter and those which such change is disabled. The meaning of the code in the “Change during operation” column of the function code table is described in the following table.

Symbol	Change during operation	Reflect and save data
Y*	Allowed	At the point when data is changed by ▲/▼ keys, the changed data is immediately reflected on the operation of inverter. However, at this stage, the changed value is not saved to the inverter. In order to save it to the inverter, press FUNC/DATA key. Without saving by FUNC/DATA key and leaving the state of when the change was made by the PRG/RESET key, the data before the change is reflected on the operation of inverter.
Y	Allowed	Even if data is changed by the ▲/▼ key, the changed data will not be reflected on the operation of the inverter as is; by pressing the FUNC/DATA key, the changed value is reflected on the operation of the inverter and is also saved to the inverter.
N	Not possible	-

■ **Copying data**

Function code data can be copied all at once (programming mode menu number 7 “Data Copy”) with the provided keypad (TP-E2) or multi-function keypad (TP-A2SW). By using this function, it is possible to read out all function code data and write the same data to a different inverter.

However, if the specification of inverter at the copy source and copy destination is not identical, some function codes may not be copied due to security reason. According to necessity, configure the settings individually for the function codes that are not copied. The behavior of the function codes regarding data copy is indicated in the “data copy” column in the function code table in the next page and following.

Y: Data is copied.

Y1: When inverter capacity is different, copying will not be performed.

Y2: When voltage group is different, copying will not be performed.

N: Data is not copied.

■ **Negative logic setting of data**

Digital input terminal and transistor/contact output terminal can become a signal for which negative logic is specified by function code data setting. Negative logic is a function to reverse ON and OFF state of input or output, and switch Active ON (function enabled with ON: positive logic) and Active OFF (function enabled with OFF: negative logic). However, negative logic may not be enabled depending on the function of the signal.

Negative logic signal can be switched by setting the data with 1000 added to the function code data of the function to be set. For example, the following example shows when coast to a stop command “BX” is selected by function code E01.

Function code data	Enable
7	“BX” is ON and coast to a stop (Active ON)
1007	“BX” is OFF and coast to a stop (Active OFF)

■ Drive control

The FRENIC-MEGA runs under any of the following control methods. Some function codes apply exclusively to the specific control method.

The enable or disable status is indicated with an icon for each control method within the permissible setting range field in the function code list table.

Icon example: Under V/f control Enable: V/f Disable: V/f

Function code table permissible setting range field	Control target (H18)	Control method (F42)
V/f	Speed (H18 = 0)	V/f control Dynamic torque vector control (F42 = 1) V/f control with slip compensation (F42=2)
PGV/f		V/f control with speed sensor (F42 = 3) Dynamic torque vector control with speed sensor (F42 = 4)
SLV		Sensorless vector control (F42 = 5)
PGV		Vector control with speed sensor (F42 = 6)
PM SLV		Sensorless vector control (synchronous motors) (F42 = 15)
PM PGV		Vector control with sensor (synchronous motors) (F42 = 16)
TRQ	Torque (H18 = 2, 3)	Vector control (F42=5, 6, 16)

For details on the control method, refer to “Function code F42”.

Note The FRENIC-MEGA is a general-purpose inverter whose operation is customized by frequency-basis function codes, like conventional inverters. Under the speed-basis drive control, however, the control target is a motor speed, not a frequency, so convert the frequency to the motor speed according to the following expression.

Conversion formula Motor speed (r/min) = 120 x frequency (Hz)/number of poles

Tip Control method icon group display

The function code list table contains locations where control method icons are displayed in groups as shown below.

Display example: Electronic thermal overload relay (F10 to F12) control icon display

F10	Electronic thermal overload protection for motor 1 (Select motor characteristics)	V/f PGV/f SLV PGV PM SLV PM PGV TRQ 1: Enable (for a general-purpose motor with self-cooling fan) 2: Enable (for an inverter-driven motor with separately powered cooling fan)	Y
F11	(Operation level)	0.00 A (disable), current value of 1 to 135% of inverter rated current set with A unit	Y
F12	(Thermal time constant)	0.5 to 75.0 min	Y

In this example, F11 and F12 indicate that the same V/f PGV/f SLV PGV PM SLV PM PGV TRQ control methods as F10 is valid.

Function code group: Excluding certain exceptions, all control methods (V/f PGV/f SLV PGV PM SLV PM PGV TRQ) for U codes, y codes, o codes, and K codes are valid, and therefore the control icons have been omitted from the table.

5.2.2 Function code tables

The table of function codes to be used in FRENIC-MEGA is shown below.

[1] F codes: Fundamental functions

Function code	Name	Control method and Data setting range	Change when running	Data copying	Factory default	Related page
F00	Data protection	V/f PGV/f SLV PGV PM SLV PM PGV TRQ 0: No data protection, no digital setting protection 1: With data protection, no digital setting protection 2: No data protection, with digital setting protection 3: With data protection, with digital setting protection	Y	Y	0	5-84
F01	Frequency setting 1	V/f PGV/f SLV PGV PM SLV PM PGV TRQ 0: Keypad operation (▲/▼ keys) 1: Analog voltage input (Terminal [12]) (from 0 to ±10 VDC) 2: Analog current input (Terminal [C1] C1 function) (4 to 20 mA DC) 3: Analog voltage input (Terminal [12]) + analog current input (Terminal [C1]) 5: Analog voltage input (Terminal [V2]) (from 0 to ±10 VDC) 6: Analog voltage input (Terminal [C1] V3 function) (from 0 to ±10 VDC) 7: UP/DOWN control 8: Keypad operation (▲/▼ keys) (with balanceless bumpless) 10: Pattern operation 11: Digital input interface card OPC-DI (option) 12: Pulse train input	N	Y	0	5-85
F02	Operation method	V/f PGV/f SLV PGV PM SLV PM PGV TRQ 0: Keypad operation (Rotation direction input: terminal block) 1: External signal (digital input) 2: Keypad operation (forward rotation) 3: Keypad operation (reverse rotation)	N	Y	*1	5-98
F03	Maximum output frequency 1	V/f PGV/f SLV PGV PM SLV PM PGV TRQ 5.0 to 599.0 Hz	N	Y	*1	5-100
F04	Base frequency 1	V/f PGV/f SLV PGV PM SLV PM PGV TRQ 5.0 to 599.0 Hz	N	Y	*1	5-101
F05	Rated voltage at base frequency 1	V/f PGV/f SLV PGV PM SLV PM PGV TRQ 0: AVR disable (output voltage proportional to power voltage) 80 to 240 V: AVR operation (200V series) 160 to 500 V: AVR operation (400 V series)	N	Y2	*1	
F06	Maximum output voltage 1	V/f PGV/f SLV PGV PM SLV PM PGV TRQ 80 to 240 V: AVR operation (200V series) 160 to 500 V: AVR operation (400 V series)	N	Y2		
F07	Acceleration time 1	V/f PGV/f PGV SLV PM SLV PM PGV TRQ 0.00 to 6000 s * 0.00 is for acceleration and deceleration time cancel (when performing soft-start and stop externally)	Y	Y	*10	5-103
F08	Deceleration time 1		Y	Y	*10	
F09	Torque boost 1	V/f PGV/f SLV PGV PM SLV PM PGV TRQ 0.0 to 20.0% (% value against base frequency voltage 1)	Y	Y	*1 *2	5-106
F10	Electronic thermal overload protection for motor 1 (Select motor characteristics)	V/f PGV/f SLV PGV PM SLV PM PGV TRQ 1: Enable (for a general-purpose motor with self-cooling fan) 2: Enable (for an inverter-driven motor with separately powered cooling fan)	Y	Y	1	
F11	(Operation level)	0.00 A (disable), current value of 1 to 135% of inverter rated current set with A unit	Y	Y1 Y2	*1 *3	
F12	(Thermal time constant)	0.5 to 75.0 min	Y	Y	*11	
F14	Restart mode after momentary power failure (operation selection)	V/f PGV/f SLV PGV PM SLV PM PGV TRQ 0: Trip immediately 1: Trip after a recovery from power failure 2: Trip after momentary deceleration is stopped 3: Continue to run (for heavy inertia load or general load) 4: Restart from frequency at power failure (for general load) 5: Restart from starting frequency	Y	Y	*1	5-110
F15	Frequency limiter (upper limit)	V/f PGV/f SLV PGV PM SLV PM PGV TRQ 0.0 to 599.0 Hz	Y	Y	70.0	5-119
F16	(Lower limit)		Y	Y	0.0	
F18	Bias (for frequency setting 1)	V/f PGV/f SLV PGV PM SLV PM PGV TRQ -100.00 to 100.00%	Y*	Y	0.00	5-120
F20	DC braking 1 (starting frequency)	V/f PGV/f SLV PGV PM SLV PM PGV TRQ 0.0 to 60.0 Hz	Y	Y	0.0	
F21	(Operation level)	0 to 100% (HHD specification), 0 to 80% (HND specification), 0 to 80% (HD specification), *102 0 to 60% (ND specification), *102	Y	Y	0	
F22	(Braking time)	0.00 (disable): 0.01 to 30.00 s	Y	Y	0.00	

Function code	Name	Control method and Data setting range	Change when running	Data copying	Factory default	Related page
F23	Starting frequency 1	V/f PGV/f SLV PGV PM SLV PM PGV TRQ 0.0 to 60.0 Hz If F42 = 5 or 15, 1.0 Hz is automatically set.	Y	Y	0.5	5-123
F24	(Holding time)	0.00 to 10.00 s	Y	Y	0.00	
F25	Stop frequency	V/f PGV/f SLV PGV PM SLV PM PGV TRQ 0.0 to 60.0 Hz	Y	Y	0.2	
F26	Motor sound (Carrier frequency)	V/f PGV/f SLV PGV PM SLV PM PGV TRQ	Y	Y	2	5-127

	HHD specification		HND specification	
	FRN****G2S-2G	FRN****G2□-4G	FRN****G2S-2G	FRN****G2□-4G
0.75 to 16kHz	0003 to 0288	0002 to 0179	0032 to 0088	0018 to 0045
0.75 to 10kHz	0346 to 0432	0217 to 1480	0115 to 0288	0060 to 0179
0.75 to 6kHz	-	-	0346 to 0432	0217 to 1480

	HD specification *102		ND specification *102	
	FRN****G2S-2G	FRN****G2□-4G	FRN****G2S-2G	FRN****G2□-4G
0.75 to 10kHz	-	0085 to 0179	-	-
0.75 to 6kHz	-	0217 to 1480	-	0085 to 1480

F27	(Tone)	V/f PGV/f SLV PGV PM SLV PM PGV TRQ 0: Level 0 (disable) 1: Level 1 2: Level 2 3: Level 3	Y	Y	0	

*1: Depends on the setting value of H101. Refer to Chapter 4 “4.4 Destination Setting” .
*2: Factory defaults are depended on motor capacity. Refer to Table 5.2-1 Factory default settings by inverter capacity.
*3: The motor rated current is automatically set. Refer to Table 5.2-2 Motor constants (function code P03).
*10: 6.00 s for FRN0003 to 0115G2S-2G/FRN0002 to 0060G2□-4G, 20.00 s for FRN0146 to 0432G2S-2G/FRN0085 to 1480G2□-4G
*11: 5.0 min for FRN0003 to 0115G2S-2G/FRN0002 to 0060G2□-4G, 10.0 min for FRN0146 to 0432G2S-2G/FRN0085 to 1480G2□-4G
*102: Supported with ROM0600 or later.

Function code	Name	Control method and Data setting range	Change when running	Data copying	Factory default	Related page
F29	Terminal [FM1] (Operation selection)	V/f PGV/f SLV PGV PM SLV PM PGV TRQ 0: Voltage output (0 to +10 VDC) 1: Current output (4 to 20 mA DC) 2: Current output (0 to 20 mA DC) 4: Voltage output (0 to ±10 VDC)	Y	Y	0	5-128
F30	(Output gain)	0 to 300%	Y*	Y	100	
F31	(Function selection)	0: Output frequency 1 (before slip compensation) 1: Output frequency 2 (after slip compensation) 2: Output current 3: Output voltage 4: Output torque 5: Load factor 6: Power consumption 7: PID feedback value 8: Actual speed/estimated speed 9: DC link bus voltage 10: Universal AO 11: Analog output test (-) 13: Motor output 14: Calibration (+) 15: PID command (SV) 16: PID output (MV) 17: Master-follower angle deviation 18: Inverter cooling fin temperature 21: PG feedback value 22: Torque current command 23: PID deviation 24: Line speed command 25: Winding diameter calculation value 26: Setting frequency (before acceleration/deceleration calculation) 50: PID control 1 feedback amount (PV1) *101 51: PID control 1 command (SV1) *101 52: PID control 1 deviation (ERR1) *101 54: PID control 2 feedback amount (PV2) *101 55: PID control 2 command (SV2) *101 56: PID control 2 deviation (ERR2) *101 60: External PID control 1 feedback amount (EPID1-PV) *101 61: External PID control 1 command (EPID1-SV) *101 62: External PID control 1 deviation (EPID1-ERR) *101 63: External PID control 1 final deviation (EPID-ERR) *101 65: External PID control 1 final output (EPID1-OUT) *101 70: External PID control 2 feedback amount (EPID2-PV) *101 71: External PID control 2 command (EPID2-SV) *101 72: External PID control 2 deviation (EPID2-ERR) *101 75: External PID control 2 final output (EPID2-OUT) *101 80: External PID control 3 feedback amount (EPID3-PV) *101 81: External PID control 3 command 3 (EPID3-SV) *101 82: External PID control 3 deviation (EPID3-ERR) *101 85: External PID control 3 final output (EPID3-OUT) *101 111 to 124: Customizable logic output signal 1 to 14	Y	Y	0	
F32	Terminal [FM2] (Operation selection)	*Same as F29	Y	Y	0	
F33	Terminal [FMP] (Pulse rate)	V/f PGV/f SLV PGV PM SLV PM PGV TRQ 25 to 6000 p/s (number of pulse at 100%)	Y*	Y	1440	5-133
F34	(Output gain)	0,1 to 300% 0: Pulse output 1 to 300%	Y*	Y	0	
F35	(Function selection)	*Same as F31	Y	Y	0	
F37	Load selection/ Auto torque boost/ Auto energy-saving operation 1	V/f PGV/f SLV PGV PM SLV PM PGV TRQ 0: Quadratic-torque load 1: Constant torque load 2: Auto torque boost 3: Auto energy-saving operation (quadratic-torque load) 4: Auto energy-saving operation (constant torque load) 5: Auto energy-saving operation with auto torque boost	N	Y	1	5-134
F38	Stop frequency (detection mode)	V/f PGV/f SLV PGV PM SLV PM PGV TRQ 0: Speed detection value / estimated speed 1: Reference speed	N	Y	0	5-136
F39	(Holding time)	V/f PGV/f SLV PGV PM SLV PM PGV TRQ 0.00 to 10.00 s	Y	Y	0.00	
F40	Torque limiter 1-1	V/f PGV/f SLV PGV PM SLV PM PGV TRQ	Y	Y	999	5-137
F41	Torque limiter 1-2	-300 to 0 to 300% ; 999 (Disable)	Y	Y	999	
F42	Drive control selection 1	V/f PGV/f SLV PGV PM SLV PM PGV TRQ 0: V/f control without slip compensation 1: Dynamic torque vector control 2: V/f control with slip compensation 3: V/f control with speed sensor 4: Dynamic torque vector control with sensor 5: Sensorless vector control 6: Vector control with speed sensor 15: Sensorless vector control (synchronous motors) 16: Vector control with sensor (synchronous motors)	N	Y	0	5-144

Function code	Name	Control method and Data setting range	Change when running	Data copying	Factory default	Related page
F43	Current limiter(mode selection)	V/f PGV/f SLV PGV PM SLV PM PGV TRQ 0: Disable 1: Enable at constant speed (disable during ACC/DEC) 2: Enable during ACC/constant speed operation (disable during DEC)	Y	Y	2	5-149
F44	(Operation level)	V/f PGV/f SLV PGV PM SLV PM PGV TRQ 20 to 200% (rated current of the inverter for 100%) (Inverter rated current is dependent on F80.)	Y	Y	*12	
F50	Electronic thermal overload (for braking resistor protection) (discharging capacity)	V/f PGV/f SLV PGV PM SLV PM PGV TRQ 0 (If using built-in breaking resistor) 1 to 9000 kWs OFF (cancel)	Y	Y1 Y2	*13	5-151
F51	(Permissible average loss)	0.001 to 99.99 kW	Y	Y1 Y2	0.001	
F52	(Braking resistance value)	0.01 to 999 Ω	Y	Y1 Y2	0.01	
F58	Terminal [FM1] (Filter)	V/f PGV/f SLV PGV PM SLV PM PGV TRQ 0.00 to 5.00 s	Y	Y	0.00	5-128 5-152
F59	(Bias)	-100.0 to 100.0%	Y*	Y	0.0	
F60	Terminal [FM2] (Output gain)	V/f PGV/f SLV PGV PM SLV PM PGV TRQ 0 to 300%	Y*	Y	100	
F61	(Function selection)	*Same as F31	Y	Y	2	
F62	(Filter)	0.00 to 5.00 s	Y	Y	0.00	
F63	(Bias)	-100.0 to 100.0%	Y*	Y	0.0	
F64	Terminal [FMP] (Filter)	V/f PGV/f SLV PGV PM SLV PM PGV TRQ 0.00 to 5.00 s	Y	Y	0.00	5-133 5-152
F80	HHD/HND/HD/ND switching	V/f PGV/f SLV PGV PM SLV PM PGV TRQ 0: HHD specification 1: HND specification 3: HD specification *102 4: ND specification *102	N	Y	*1	5-153

*1: Depends on the setting value of H101. Refer to Chapter 4 “4.4 Destination Setting”.

*12: If F80 = 0:180% for FRN0003 to 0075G2S-2G/FRN0002 to 0041G2□-4G, 160% for FRN0088 to 0432G2S-2G/FRN0045 to 1480G2□-4G
If F80 = 1:130%, If F80 = 3:160%, If F80 = 4:130%

*13: 0 for FRN0003 to 0046G2S-2G/FRN0002 to 0023G2□-4G, OFF for FRN0059 to 0432G2S-2G/FRN0031 to 1480G2□-4G

*101: Supported with ROM0500 or later.

*102: Supported with ROM0600 or later.

[2] E codes: Extension Terminal Functions (terminal functions)

Function code	Name	Control method and Data setting range	Change when running	Data copying	Factory default	Related page
E01	Terminal [X1] (Function selection)	See E01 to E09 in “Table 5.2-3 Control input terminal setting list table”.	N	Y	0	5-155
E02	Terminal [X2]		N	Y	1	
E03	Terminal [X3]		N	Y	2	
E04	Terminal [X4]		N	Y	3	
E05	Terminal [X5]		N	Y	4	
E06	Terminal [X6]		N	Y	5	
E07	Terminal [X7]		N	Y	6	
E08	Terminal [X8]		N	Y	7	
E09	Terminal [X9]		N	Y	8	

Table 5.2-3 Control input terminal setting list table
(Y indicates those selections that can be selected, and N indicates those that cannot be selected.)

Function code and name				Control method and Data setting range
E01 to E09	E70	E98, E99	o101 to o116	
Terminal [X1] to [X9]	Keypad M/Shift key	Terminal [FWD], [REV]	Terminal [I1] to [I16] (for OPC-DI)	
Y	Y	Y	Y	V/f PGV/f SLV PGV PM SLV PM PGV TRQ 0 (1000): Multistep frequency selection (0 to 1 steps) “SS1” 1 (1001): Select multistep frequency (0 to 3 steps) “SS2” 2 (1002): Select multistep frequency (0 to 7 steps) “SS4” 3 (1003): Select multistep frequency (0 to 15 steps) “SS8”
Y	Y	Y	Y	4 (1004): Select ACC/DEC time (2 steps) “RT1” 5 (1005): Select ACC/DEC time (4 steps) “RT2”
Y	Y	Y	Y	V/f PGV/f SLV PGV PM SLV PM PGV TRQ 6 (1006): Select 3-wire operation “HLD”
Y	Y	Y	Y	7 (1007): Coast to a stop command “BX”
Y	N	Y	Y	8 (1008): Reset alarm (Abnormal) “RST”
Y	N	Y	Y	9 (1009): External alarm “THR” (9 = Active OFF/1009 = Active ON)
Y	Y	Y	Y	V/f PGV/f SLV PGV PM SLV PM PGV TRQ 10 (1010): Ready for jogging “JOG”
Y	Y	Y	Y	11 (1011): Select frequency setting 2/ frequency setting 1 “Hz2/ Hz1”
Y	Y	Y	Y	V/f PGV/f SLV PGV PM SLV PM PGV TRQ 12 (1012): Select motor 2 “M2”
Y	Y	Y	Y	V/f PGV/f SLV PGV PM SLV PM PGV TRQ 13: DC braking command “DCBRK” PM SLV is valid only when P30 = 0
Y	Y	Y	Y	V/f PGV/f SLV PGV PM SLV PM PGV TRQ 14 (1014): Select torque limit 2/ torque limit 1 “TL2/ TL1”
Y	N	Y	Y	V/f PGV/f SLV PGV PM SLV PM PGV TRQ 15: Switch to commercial power (50 Hz) “SW50” 16: Switch to commercial power (60 Hz) “SW60”
Y	N	Y	Y	V/f PGV/f SLV PGV PM SLV PM PGV TRQ 17 (1017): UP command “UP” 18 (1018): DOWN command “DOWN”
Y	Y	Y	Y	V/f PGV/f SLV PGV PM SLV PM PGV TRQ 19 (1019): Allow function code editing (data change enabled) “WE-KP”
Y	Y	Y	Y	V/f PGV/f SLV PGV PM SLV PM PGV TRQ 20 (1020): Cancel PID control “Hz/PID”
Y	Y	Y	Y	21 (1021): Switch normal/ inverse operation “IVS”
Y	N	Y	Y	V/f PGV/f SLV PGV PM SLV PM PGV TRQ 22 (1022): Interlock “IL”
Y	Y	Y	Y	V/f PGV/f SLV PGV PM SLV PM PGV TRQ 23 (1023): Cancel torque control “Hz/TRQ”
Y	Y	Y	Y	V/f PGV/f SLV PGV PM SLV PM PGV TRQ 24 (1024): Select link operation (RS-485, BUS option) “LE”
Y	N	Y	Y	25 (1025): Universal DI “U-DI”

Function code and name				Control method and Data setting range
E01 to E09	E70	E98, E99	o101 to o116	
Terminal [X1] to [X9]	Keypad M/Shift key	Terminal [FWD], [REV]	Terminal [I1] to [I16] (for OPC-DI)	
Y	Y	Y	Y	V/f PGV/f SLV PGV PM SLV PM PGV TRQ 26 (1026): Select auto search for idling motor speed at starting “STM”
Y	Y	Y	Y	V/f PGV/f SLV PGV PM SLV PM PGV TRQ 30 (1030): Force to stop “STOP” (30 = Active OFF/1030 = Active ON)
Y	Y	Y	Y	V/f PGV/f SLV PGV PM SLV PM PGV TRQ 32 (1032): Pre-excite “EXITE”
Y	Y	Y	Y	V/f PGV/f SLV PGV PM SLV PM PGV TRQ 33 (1033): Reset PID integral and differential terms “PID-RST” 34 (1034): Hold PID integral term “PID-HLD”
Y	Y	Y	Y	V/f PGV/f SLV PGV PM SLV PM PGV TRQ 35 (1035): Local (keypad) command selection “LOC”
Y	Y	Y	Y	V/f PGV/f SLV PGV PM SLV PM PGV TRQ 36 (1036): Select motor 3 “M3” 37 (1037): Select motor 4 “M4”
Y	Y	Y	Y	38 (1038): Run enable *100 “RE”
Y	Y	Y	Y	V/f PGV/f SLV PGV PM SLV PM PGV TRQ 39: Condensation prevention “DWP”
Y	Y	Y	Y	V/f PGV/f SLV PGV PM SLV PM PGV TRQ 40: Switch to commercial power built-in sequence (50 Hz) “ISW50” 41: Switch to commercial power built-in sequence (60 Hz) “ISW60”
Y	N	Y	Y	V/f PGV/f SLV PGV PM SLV PM PGV TRQ 42 (1042): Activate the limit switch at start point “LS”
Y	Y	Y	Y	V/f PGV/f SLV PGV PM SLV PM PGV TRQ 46 (1046): Overload stop enable command “OLS”
Y	Y	Y	Y	V/f PGV/f SLV PGV PM SLV PM PGV TRQ 47 (1047): Servo lock command “LOCK”
Y*1	N	N	N	V/f PGV/f SLV PGV PM SLV PM PGV TRQ 48: Pulse train input “PIN” *1 Terminal [X6] and [X7] only (E06, E07)
Y*2	Y	Y	Y	49 (1049): Pulse train sign terminal “SIGN” *2 Other than terminal [X7] (E01 to E06, E08, E09)
Y	N	Y	Y	V/f PGV/f SLV PGV PM SLV PM PGV TRQ 50 (1050): Clear running motor regular switching time *101 “MCLR”
Y	N	Y	Y	V/f PGV/f SLV PGV PM SLV PM PGV TRQ 58 (1058) :UP/DOWN frequency clear “STZ”
Y	Y	Y	Y	V/f PGV/f SLV PGV PM SLV PM PGV TRQ 59 (1059): Battery operation selection “BATRY”
Y	Y	Y	Y	V/f PGV/f SLV PGV PM SLV PM PGV TRQ 60 (1060): Select torque bias 1 “TB1” 61 (1061): Select torque bias 2 “TB2” 62 (1062): Hold torque bias “H-TB”
Y	N	Y	Y	V/f PGV/f SLV PGV PM SLV PM PGV TRQ 65 (1065): Check brake “BRKE”
Y	Y	Y	Y	V/f PGV/f SLV PGV PM SLV PM PGV TRQ 70 (1070): Cancel line speed control “Hz/LSC” 71 (1071): Hold line speed control frequency in the memory “LSC-HLD”
Y	N	Y	Y	V/f PGV/f SLV PGV PM SLV PM PGV TRQ 72 (1072): Count the run time of commercial power-driven motor 1 “CRUN-M1” 73 (1073): Count the run time of commercial power-driven motor 2 “CRUN-M2” 74 (1074): Count the run time of commercial power-driven motor 3 “CRUN-M3” 75 (1075): Count the run time of commercial power-driven motor 4 “CRUN-M4”
Y	Y	Y	Y	V/f PGV/f SLV PGV PM SLV PM PGV TRQ 76 (1076): Select droop control “DROOP”
Y	Y	Y	Y	V/f PGV/f SLV PGV PM SLV PM PGV TRQ 77 (1077): Speed deviation error cancel “PG-CCL”
Y	Y	Y	Y	V/f PGV/f SLV PGV PM SLV PM PGV TRQ 78 (1078): Speed control parameter selection 1 “MPRM1” 79 (1079): Speed control parameter selection 2 “MPRM2”
Y	Y	Y	Y	V/f PGV/f SLV PGV PM SLV PM PGV TRQ 80 (1080): Cancel customizable logic “CLC” 81 (1081): Clear all customizable logic timers “CLTC”
Y	Y	Y	Y	V/f PGV/f SLV PGV PM SLV PM PGV TRQ 82 (1082): Anti-regenerative control cancel “AR-CCL”

Function code and name				Control method and Data setting range
E01 to E09	E70	E98, E99	o101 to o116	
Terminal [X1] to [X9]	Keypad M/Shift key	Terminal [FWD], [REV]	Terminal [I1] to [I16] (for OPC-DI)	
Y	Y	Y	Y	V/f PGV/f SLV PGV PM SLV PM PGV TRQ 83 (1083): PG input switching “PG-SEL”
Y	Y	Y	Y	V/f PGV/f SLV PGV PM SLV PM PGV TRQ 84 (1084): Acceleration/deceleration cancel (bypass) “BPS”
Y	N	Y	Y	V/f PGV/f SLV PGV PM SLV PM PGV TRQ 87 (1087) : Run command 2/1 *100 “FR2/FR1” 88 : Run forward / stop 2 *100 “FWD2” 89 : Run reverse / stop 2 *100 “REV2”
Y	Y	Y	Y	V/f PGV/f SLV PGV PM SLV PM PGV TRQ 94: Forward rotation JOG “FJOG” 95: Reverse rotation JOG “RJOG”
Y	Y	Y	Y	V/f PGV/f SLV PGV PM SLV PM PGV TRQ 97 (1097): Direction command “DIR”
N	N	Y	N	V/f PGV/f SLV PGV PM SLV PM PGV TRQ 98: Run forward / stop command “FWD” 99: Run reverse / stop command “REV”
Y	Y	Y	Y	V/f PGV/f SLV PGV PM SLV PM PGV TRQ 100: No assignment “NONE”
Y	Y	Y	Y	V/f PGV/f SLV PGV PM SLV PM PGV TRQ 105 (1105): Light load automatic double speed judgment permission “LAC-ENB”
Y	Y	Y	Y	V/f PGV/f SLV PGV PM SLV PM PGV TRQ 110 (1110): Servo lock gain selection “LSG2”
Y	N	Y	Y	V/f PGV/f SLV PGV PM SLV PM PGV TRQ 111 (1111): Forced stop (terminal block only) (111 = Active OFF/1111 = Active ON) “STOP-T”
Y	Y	Y	Y	V/f PGV/f SLV PGV PM SLV PM PGV TRQ 116 (1116): AVR cancel “AVR-CCL”
Y	Y	Y	Y	V/f PGV/f SLV PGV PM SLV PM PGV TRQ 119 (1119): Speed regulator P selection “P-SEL”
Y	Y	Y	Y	V/f PGV/f SLV PGV PM SLV PM PGV TRQ 121 (1121) to 129(1129): Customizable logic input 1 to 9 “CLI1” to “CLI9”
Y	Y	Y	Y	V/f PGV/f SLV PGV PM SLV PM PGV TRQ 130 (1130): Boost command *101 “BST” 131 (1131): Flowrate switch *101 “FS” 132 (1132): Filter clogging reverse rotation command *101 “FRC” 133 (1133): Switch PID channel *101 “PID2/1”
Y	Y	Y	Y	V/f PGV/f SLV PGV PM SLV PM PGV TRQ 134 (1134): Forced operation command “FMS”
Y	Y	Y	Y	V/f PGV/f SLV PGV PM SLV PM PGV TRQ 135 (1135): Travel/absolute position switching “INC/ABS”
Y	Y	Y	Y	V/f PGV/f SLV PGV PM SLV PM PGV TRQ 136 (1136): Orientation command "ORT"
Y	Y	Y	Y	V/f PGV/f SLV PGV PM SLV PM PGV TRQ 137 (1137): Position control/speed control switching "POS/Hz" 138 (1138): Homing command "ORG"
Y	N	Y	Y	139 (1139): + direction overtravel "+OT" 140 (1140): - direction overtravel "-OT"
Y	Y	Y	Y	141 (1141): Position clear command "P-CLR" 142 (1142): Position preset command "P-PRESET" 143 (1143): Teaching command "TEACH" 144 (1144): Positioning data change command "POS-SET" 145 (1145): Positioning data selection 1 "POS-SEL1" 146 (1146): Positioning data selection 2 "POS-SEL2" 147 (1147): Positioning data selection 4 "POS-SEL4"

Function code and name				Control method and Data setting range
E01 to E09	E70	E98, E99	o101 to o116	
Terminal [X1] to [X9]	Keypad M/Shift key	Terminal [FWD], [REV]	Terminal [I1] to [I16] (for OPC-DI)	
Y	N	Y	Y	V/f PGV/f SLV PGV PM SLV PM PGV TRQ 149 (1149): Switch pump control *101 “PCHG” 150 (1150): Enable master motor drive in mutual operation *101 “MENO” 151 (1151): Pump control motor 1 *101 “MEN1” 152 (1152): Pump control motor 2 *101 “MEN2” 153 (1153): Pump control motor 3 *101 “MEN3” 154 (1154): Pump control motor 4 *101 “MEN4” 155 (1155): Pump control motor 5 *101 “MEN5” 156 (1156): Pump control motor 6 *101 “MEN6” 157 (1157): Pump control motor 7 *101 “MEN7” 158 (1158): Pump control motor 8 *101 “MEN8” V/f PGV/f SLV PGV PM SLV PM PGV TRQ 159 (1159): For adjustment by manufacturer *101 “ICSW” 160 (1160): For adjustment by manufacturer *101 “ICFB” 161 (1161): For adjustment by manufacturer *101 “LCFB”
Y	N	Y	Y	V/f PGV/f SLV PGV PM SLV PM PGV TRQ 169 (1169): Initial diameter set command “D-SET” 170 (1170): Winding diameter calculation hold command “D-HLD”
Y	Y	Y	Y	V/f PGV/f SLV PGV PM SLV PM PGV TRQ 171 (1171): PID control multistage command 1 “PID-SS1” 172 (1172): PID control multistage command 2 “PID-SS2”
Y	Y	Y	Y	181 (1181): Ext. PID multistep command 1 *101 “EPID-SS1” 182 (1182): Ext. PID multistep command 2 *101 “EPID-SS2” 190 (1190): Cancel scheduled operation *101 “TMC” 191 (1191): Enable schedule 1 *101 “TM1” 192 (1192): Enable schedule 2 *101 “TM2” 193 (1193): Enable schedule 3 *101 “TM3” 194 (1194): Enable schedule 4 *101 “TM4” 201 (1201): Ext. PID1 ON command *101 “EPID1-ON” 202 (1202): Cancel ext. PID1 *101 “%/EPID1” 203 (1203): Switch normal/inverse operation under ext. PID1 *101 “EPID1-IVS” 204 (1204): Reset ext. PID1 integral and differential components *101 “EPID1-RST” 205 (1205): Hold ext. PID1 integral component *101 “EPID1-HLD” 211 (1211): Ext. PID2 ON command *101 “EPID2-ON” 212 (1212): Cancel ext. PID2 *101 “%/EPID2” 213 (1213): Switch normal/inverse operation under ext. PID2 *101 “EPID2-IVS” 214 (1214): Reset ext. PID2 integral and differential components *101 “EPID2-RST” 215 (1215): Hold ext. PID2 integral component *101 “EPID2-HLD” 221 (1221): Ext. PID3 ON command *101 “EPID3-ON” 222 (1222): Cancel ext. PID3 *101 “%/EPID3” 223 (1223): Switch normal/inverse operation under ext. PID3 *101 “EPID3-IVS” 224 (1224): Reset ext. PID3 integral and differential components *101 “EPID3-RST” 225 (1225): Hold ext. PID3 integral component *101 “EPID3-HLD”
				* Inside the ( ) is the negative logic signal (OFF at short-circuit).

*100: Supported with ROM0300 or later.

*101: Supported with ROM0500 or later.

Function code	Name	Control method and Data setting range	Change when running	Data copying	Factory default	Related page
E10	Acceleration time 2	V/f PGV/f SLV PGV PM SLV PM PGV TRQ 0.00 to 6000 s * 0.00 is for acceleration and deceleration time cancel (when performing soft-start and stop externally)	Y	Y	*10	5-183
E11	Deceleration time 2		Y	Y	*10	
E12	Acceleration time 3		Y	Y	*10	
E13	Deceleration time 3		Y	Y	*10	
E14	Acceleration time 4		Y	Y	*10	
E15	Deceleration time 4		Y	Y	*10	
E16	Torque limiter 2-1	V/f PGV/f SLV PGV PM SLV PM PGV TRQ -300 to 0 to 300%; 999 (Disable)	Y	Y	999	
E17	Torque limiter 2-2	-300 to 0 to 300%; 999 (Disable)	Y	Y	999	
E20	Terminal [Y1] (Function selection)	See E20 to E27 in “Table 5.2-4 Control output terminal setting list table”.	N	Y	0	5-183
E21	Terminal [Y2]		N	Y	1	
E22	Terminal [Y3]		N	Y	2	
E23	Terminal [Y4]		N	Y	7	
E24	Terminal [Y5A/C] (Ry output)		N	Y	15	
E27	Terminal [30A/B/C] function (Relay output)		N	Y	99	

*10: 6.00 s for FRN0003 to 0115G2S-2G/FRN0002 to 0060G2□-4G, 20.00 s for FRN0146 to 0432G2S-2G/FRN0075 to 1386G2□-4G.

Table 5.2-4 Control output terminal setting list table
(Y indicates those selections that can be selected, and N indicates those that cannot be selected.)

	Function code and name				Control method and Data setting range
E20 to E24, E27	E71	o01 to o07 *101	o23 to o26	o121 to o128	
Terminal [Y1] to [Y4], [Y5A/C], [30A/B/C]	Keypad M-LED indicator	Terminal [Y6A/C] to [Y12A/C] (for OPC-RY2)	Terminal [Y1A/B/C] to [Y4A/B/C] (for OPC-RY)	Terminal [O1] to [O8] (for OPC-DO)	
Y	Y	Y	Y	Y	V/f PGV/f SLV PGV PM SLV PM PGV TRQ 0 (1000): Inverter running
Y	Y	Y	Y	Y	V/f PGV/f SLV PGV PM SLV PM PGV TRQ 1 (1001): Frequency (speed) arrival “FAR”
Y	Y	Y	Y	Y	V/f PGV/f SLV PGV PM SLV PM PGV TRQ 2 (1002): Frequency (speed) detected “FDT”
Y	Y	Y	Y	Y	3 (1003): Under voltage detected (inverter stopped) “LU”
Y	Y	Y	Y	Y	4 (1004): Detected torque polarity “B/D”
Y	Y	Y	Y	Y	5 (1005): Inverter output limiting “IOL”
Y	Y	Y	Y	Y	6 (1006): Auto-restarting after momentary power failure “IPF”
Y	Y	Y	Y	Y	7 (1007): Motor overload early warning “OL”
Y	Y	Y	Y	Y	8 (1008): Keypad operation “KP”
Y	Y	Y	Y	Y	10 (1010): Inverter ready to run “RDY”
Y	N	Y	Y	Y	V/f PGV/f SLV PGV PM SLV PM PGV TRQ 11: Commercial/inverter power supply switching “SW88” 12: Commercial/inverter power supply switching “SW52-2” 13: Commercial/inverter power supply switching “SW52-1”
Y	N	Y	Y	Y	V/f PGV/f SLV PGV PM SLV PM PGV TRQ 15 (1015): Switch MC on the input power lines “AX”
Y	Y	Y	Y	Y	V/f PGV/f SLV PGV PM SLV PM PGV TRQ 16 (1016): Pattern operation stage transition “TU” 17 (1017): Pattern operation cycle completed “TO” 18 (1018): Pattern operation stage 1 “STG1” 19 (1019): Pattern operation stage 2 “STG2” 20 (1020): Pattern operation stage 4 “STG4”
Y	Y	Y	Y	Y	V/f PGV/f SLV PGV PM SLV PM PGV TRQ 21 (1021): Frequency (speed) arrival 2 “FAR2”
Y	Y	Y	Y	Y	V/f PGV/f SLV PGV PM SLV PM PGV TRQ 22 (1022): Inverter output limiting with delay “IOL2”
Y	Y	Y	Y	Y	V/f PGV/f SLV PGV PM SLV PM PGV TRQ 25 (1025): Cooling fan in operation “FAN”
Y	Y	Y	Y	Y	V/f PGV/f SLV PGV PM SLV PM PGV TRQ 26 (1026): Auto-resetting “TRY”
Y	N	N	Y	N	V/f PGV/f SLV PGV PM SLV PM PGV TRQ 27 (1027): Universal DO “U-DO”

Function code and name					Control method and Data setting range
E20 to E24, E27	E71	o01 to o07 *101	o23 to o26	o121 to o128	
Terminal [Y1] to [Y4], [Y5A/C], [30A/B/C]	Keypad M-LED indicator	Terminal [Y6A/C] to [Y12A/C] (for OPC-RY2)	Terminal [Y1A/B/C] to [Y4A/B/C] (for OPC-RY)	Terminal [O1] to [O8] (for OPC-DO)	
Y	Y	Y	Y	Y	V/f PGV/f SLV PGV PMSLV PMPGV TRQ 28 (1028): Heat sink overheat early warning “OH”
Y	Y	Y	Y	Y	V/f PGV/f SLV PGV PMSLV PMPGV TRQ 29 (1029): Master-follower operation complete “SY”
Y	Y	Y	Y	Y	V/f PGV/f SLV PGV PMSLV PMPGV TRQ 30 (1030): Lifetime alarm “LIFE”
Y	Y	Y	Y	Y	V/f PGV/f SLV PGV PMSLV PMPGV TRQ 31 (1031): Frequency (speed) detected 2 “FDT2”
Y	Y	Y	Y	Y	V/f PGV/f SLV PGV PMSLV PMPGV TRQ 33 (1033): Reference loss detected “REF OFF”
Y	Y	Y	Y	Y	V/f PGV/f SLV PGV PMSLV PMPGV TRQ 35 (1035): Inverter outputting “RUN 2”
Y	Y	Y	Y	Y	V/f PGV/f SLV PGV PMSLV PMPGV TRQ 36 (1036): Overload prevention controlling “OLP”
Y	Y	Y	Y	Y	V/f PGV/f SLV PGV PMSLV PMPGV TRQ 37 (1037): Current detected “ID” 38 (1038): Current detected 2 “ID2” 39 (1039): Current detected 3 “ID3” 41 (1041): Low current detected “IDL”
Y	Y	Y	Y	Y	V/f PGV/f SLV PGV PMSLV PMPGV TRQ 42 (1042): PID alarm “PID-ALM” 43 (1043): Under PID control “PID-CTL” 44 (1044): Under sleep mode of PID control “PID-STP”
Y	Y	Y	Y	Y	V/f PGV/f SLV PGV PMSLV PMPGV TRQ 45 (1045): Low torque detected “U-TL” 46 (1046): Torque detected 1 “TD1” 47 (1047): Torque detected 2 “TD2”
Y	Y	Y	Y	Y	V/f PGV/f SLV PGV PMSLV PMPGV TRQ 48 (1048): Motor 1 selected “SWM1” 49 (1049): Motor 2 selected “SWM2” 50 (1050): Motor 3 selected “SWM3” 51 (1051): Motor 4 selected “SWM4”
Y	Y	Y	Y	Y	V/f PGV/f SLV PGV PMSLV PMPGV TRQ 52 (1052): Forward rotation “FRUN” 53 (1053): Reverse rotation “RRUN”
Y	Y	Y	Y	Y	V/f PGV/f SLV PGV PMSLV PMPGV TRQ 54 (1054): Under remote mode “RMT”
Y	Y	Y	Y	Y	V/f PGV/f SLV PGV PMSLV PMPGV TRQ 55 (1055): Run command entered *100 “AX2”
Y	Y	Y	Y	Y	V/f PGV/f SLV PGV PMSLV PMPGV TRQ 56 (1056): Motor overheat detected by thermistor “THM”
Y	Y	Y	Y	Y	V/f PGV/f SLV PGV PMSLV PMPGV TRQ 57 (1057): Mechanical brake control “BRKS”
Y	Y	Y	Y	Y	V/f PGV/f SLV PGV PMSLV PMPGV TRQ 58 (1058): Frequency (speed) detected 3 “FDT3”
Y	Y	Y	Y	Y	V/f PGV/f SLV PGV PMSLV PMPGV TRQ 59 (1059): Current input wire break detection (terminal [C1] and [C2]) “C1OFF”
Y	Y	Y	Y	Y	V/f PGV/f SLV PGV PMSLV PMPGV TRQ 68 (1068): Motor regular switching early warning *101 “MCHG” 69 (1069): Pump control output limit signal *101 “MLIM”
Y	Y	Y	Y	Y	V/f PGV/f SLV PGV PMSLV PMPGV TRQ 70 (1070): Speed valid “DNZS”
Y	Y	Y	Y	Y	V/f PGV/f SLV PGV PMSLV PMPGV TRQ 71 (1071): Speed agreement “DSAG”
Y	Y	Y	Y	Y	V/f PGV/f SLV PGV PMSLV PMPGV TRQ 72 (1072): Frequency (speed) arrival 3 “FAR3”
Y	Y	Y	Y	Y	V/f PGV/f SLV PGV PMSLV PMPGV TRQ 76 (1076): PG error detected “PG-ERR”
Y	Y	Y	Y	Y	V/f PGV/f SLV PGV PMSLV PMPGV TRQ 77 (1077): Low DC link bus voltage detection “U-EDC”
Y	Y	Y	Y	Y	V/f PGV/f SLV PGV PMSLV PMPGV TRQ 79 (1079): During decelerating at momentary power failure “IPF2”

	Function code and name				Control method and Data setting range
E20 to E24, E27	E71	o01 to o07 *101	o23 to o26	o121 to o128	
Terminal [Y1] to [Y4], [Y5A/C], [30A/B/C]	Keypad M-LED indicator	Terminal [Y6A/C] to [Y12A/C] (for OPC-RY2)	Terminal [Y1A/B/C] to [Y4A/B/C] (for OPC-RY)	Terminal [O1] to [O8] (for OPC-DO)	
Y	Y	Y	Y	Y	V/f PGV/f SLV PGV PMSLV PMPGV TRQ 82 (1082): Positioning complete "PSET"
Y	Y	Y	Y	Y	V/f PGV/f SLV PGV PMSLV PMPGV TRQ 84 (1084): Maintenance timer counted up "MNT"
Y	Y	Y	Y	Y	V/f PGV/f SLV PGV PMSLV PMPGV TRQ 87 (1087): Frequency arrival and detected "FARFDT"
Y	N	Y	Y	Y	V/f PGV/f SLV PGV PMSLV PMPGV TRQ 88 (1088): Auxiliary motor drive signal *101 "AUX_L"
Y	N	Y	Y	Y	V/f PGV/f SLV PGV PMSLV PMPGV TRQ 90 (1090): Alarm content 1 "AL1" 91 (1091): Alarm content 2 "AL2" 92 (1092): Alarm content 4 "AL4" 93 (1093): Alarm content 8 "AL8"
Y	Y	Y	Y	Y	V/f PGV/f SLV PGV PMSLV PMPGV TRQ 95 (1095): Forced operation "FMRUN"
Y	Y	Y	Y	Y	V/f PGV/f SLV PGV PMSLV PMPGV TRQ 98 (1098): Warning "L-ALM" 99 (1099): Alarm output "ALM"
N	Y	Y	N	Y	V/f PGV/f SLV PGV PMSLV PMPGV TRQ 100 : No assignment "NONE"
Y	Y	Y	Y	Y	V/f PGV/f SLV PGV PMSLV PMPGV TRQ 101 (1101): EN circuit failure detected "DECF" 102 (1102): EN terminal input OFF "ENOFF"
Y	Y	Y	Y	Y	V/f PGV/f SLV PGV PMSLV PMPGV TRQ 105 (1105): Braking transistor broken "DBAL"
Y	Y	Y	Y	Y	V/f PGV/f SLV PGV PMSLV PMPGV TRQ 111 (1111) to 124(1124): Customizable logic output signal 1 to 14 "CLO1" to "CLO14"
Y	Y	Y	Y	Y	V/f PGV/f SLV PGV PMSLV PMPGV TRQ 125 (1125): Integral power pulse output "POUT"
Y	Y	Y	Y	Y	V/f PGV/f SLV PGV PMSLV PMPGV TRQ 131 (1131): Speed limit level "S-LIM"
Y	Y	Y	Y	Y	V/f PGV/f SLV PGV PMSLV PMPGV TRQ 132 (1132): Torque limit level "T-LIM"
Y	Y	Y	Y	Y	V/f PGV/f SLV PGV PMSLV PMPGV TRQ 133 (1133): Low current detection "IDL2"
Y	Y	Y	Y	Y	V/f PGV/f SLV PGV PMSLV PMPGV TRQ 135 (1135): Dancer upper limit position warning signal "D-UPFL" 136 (1136): Dancer lower limit position warning signal "D-DNFL" 137 (1137): Dancer position limit warning signal "D-FL"
Y	Y	Y	Y	Y	V/f PGV/f SLV PGV PMSLV PMPGV TRQ 151 (1151): Overtravel detection "OT-OUT" 152 (1152): Forced stop detection "STOP-OUT" 153 (1153): Pass point detection 1 "PPAS1" 154 (1154): Pass point detection 2 "PPAS2"
Y	Y	Y	Y	Y	V/f PGV/f SLV PGV PMSLV PMPGV TRQ 158 (1158): Overload detected "LLIM" 159 (1159): Performing light load automatic double speed operation "LAC"
Y	N	Y	Y	Y	V/f PGV/f SLV PGV PMSLV PMPGV TRQ 160 (1160): Motor 1 being driven with inverter *101 "M1_I" 161 (1161): Motor 1 being driven by commercial power *101 "M1_L" 162 (1162): Motor 2 being driven with inverter *101 "M2_I" 163 (1163): Motor 2 being driven by commercial power *101 "M2_L" 164 (1164): Motor 3 being driven with inverter *101 "M3_I" 165 (1165): Motor 3 being driven by commercial power *101 "M3_L" 166 (1166): Motor 4 being driven with inverter *101 "M4_I" 167 (1167): Motor 4 being driven by commercial power *101 "M4_L" 169 (1169): Motor 5 being driven by commercial power *101 "M5_L" 171 (1171): Motor 6 being driven by commercial power *101 "M6_L" 173 (1173): Motor 7 being driven by commercial power *101 "M7_L" 175 (1175): Motor 8 being driven by commercial power *101 "M8_L"

	Function code and name				Control method and Data setting range
E20 to E24, E27	E71	o01 to o07 *101	o23 to o26	o121 to o128	
Terminal [Y1] to [Y4], [Y5A/C], [30A/B/C]	Keypad M-LED indicator	Terminal [Y6A/C] to [Y12A/C] (for OPC-RY2)	Terminal [Y1A/B/C] to [Y4A/B/C] (for OPC-RY)	Terminal [O1] to [O8] (for OPC-DO)	
Y	Y	Y	Y	Y	V/f PGV/f SLV PGV PMSLV PMPGV TRQ 176 (1176): For adjustment by manufacturer *101 “COM_ABN” 177 (1177): For adjustment by manufacturer *101 “COM_DO”
Y	Y	Y	Y	Y	V/f PGV/f SLV PGV PMSLV PMPGV TRQ 180 (1180): In mutual operation *101 “M-RUN” 181 (1181): Alarm in mutual operation *101 “M-ALM”
Y	Y	Y	Y	Y	V/f PGV/f SLV PGV PMSLV PMPGV TRQ 190 (1190): Under scheduled operation *101 “TMD” 191 (1191): Schedule 1 enabled *101 “TMD1” 192 (1192): Schedule 2 enabled *101 “TMD2” 193 (1193): Schedule 3 enabled *101 “TMD3” 194 (1194): Schedule 4 enabled *101 “TMD4”
Y	Y	Y	Y	Y	V/f PGV/f SLV PGV PMSLV PMPGV TRQ 200 (1200): Under PID2 control *101 “PID2” 201 (1201): PID1 alarm *101 “PV1-ALM” 202 (1202): PID1 feedback error *101 “PV1-OFF” 203 (1203): PID2 alarm *101 “PV2-ALM” 204 (1204): PID2 feedback error *101 “PV2-OFF”
Y	Y	Y	Y	Y	V/f PGV/f SLV PGV PMSLV PMPGV TRQ 211 (1211): Under external PID1 control *101 “EPID1-CTL” 212 (1212): External PID1 output *101 “EPID1-OUT” 213 (1213): Running under external PID1 *101 “EPID1-RUN” 214 (1214): External PID1 alarm *101 “EPV1-ALM” 215 (1215): External PID1 feedback error *101 “EPV1-OFF” 221 (1221): Under external PID2 control *101 “EPID2-CTL” 222 (1222): External PID2 output *101 “EPID2-OUT” 223 (1223): Running under external PID2 *101 “EPID2-RUN” 224 (1224): External PID2 alarm *101 “EPV2-ALM” 225 (1225): External PID2 feedback error *101 “EPV2-OFF” 231 (1231): Under external PID3 control *101 “EPID3-CTL” 232 (1232): External PID3 output *101 “EPID3-OUT” 233 (1233): Running under external PID3 *101 “EPID3-RUN” 234 (1234): External PID3 alarm *101 “EPV3-ALM” 235 (1235): External PID3 feedback error *101 “EPV3-OFF”
Y	Y	Y	Y	Y	V/f PGV/f SLV PGV PMSLV PMPGV TRQ 251 (1251): M/Shift key ON/OFF status “MTGL”
					* Inside the ( ) is the negative logic signal (OFF at short-circuit).

*100: Supported with ROM0300 or later.

*101: Supported with ROM0500 or later.

Function code	Name	Control method and Data setting range	Change when running	Data copying	Factory default	Related page
E29	Frequency arrival delay timer (FAR2)	V/f PGV/f SLV PGV PM SLV PM PGV TRQ 0.01 to 10.00 s	Y	Y	0.10	5-199
E30	Frequency arrival detection width (Detection width)	V/f PGV/f SLV PGV PM SLV PM PGV TRQ 0.0 to 10.0 Hz	Y	Y	2.5	
E31	Frequency detection 1 (operation level)	V/f PGV/f SLV PGV PM SLV PM PGV TRQ 0.0 to 599.0 Hz	Y	Y	*1	5-201
E32	(Hysteresis width)	V/f PGV/f SLV PGV PM SLV PM PGV TRQ 0.0 to 599.0 Hz	Y	Y	1.0	
E34	Overload early warning/Current detection (Level)	V/f PGV/f SLV PGV PM SLV PM PGV TRQ 0.00 (Disable), 1 to 200% of inverter rated current set with A unit	Y	Y1 Y2	*1 *3	
E35	(Timer)	0.01 to 600.00 s	Y	Y	10.00	
E36	Frequency detection 2 (Level)	V/f PGV/f SLV PGV PM SLV PM PGV TRQ 0.0 to 599.0 (Hz)	Y	Y	*1	5-203
E37	Current detection 2/Low current detection (Level)	*Same as E34	Y	Y1 Y2	*1 *3	5-203
E38	(Timer)	*Same as E35	Y	Y	10.00	
E39	Constant rate of feeding coefficient 1/ Speed display auxiliary coefficient 1	V/f PGV/f SLV PGV PM SLV PM PGV TRQ 0.000 to 9.999	Y	Y	1.000	
E42	LED display filter	V/f PGV/f SLV PGV PM SLV PM PGV TRQ 0.0 to 5.0 s	Y	Y	0.5	
E43	LED monitor (display selection)	V/f PGV/f SLV PGV PM SLV PM PGV TRQ 0: Speed monitor (Selectable with E48) 3: Output current 4: Output voltage 8: Calculated motor output torque 9: Power consumption 10: PID process command 12: PID feedback value 13: Timer value 14: PID output 15: Load factor 16: Motor output 17: Analog signal input monitor 21: Current position 22: Positioning deviation 23: Torque current (%) 24: Magnetic flux command(%) 25: Input watt-hour 26: Winding diameter 27: Position control start position 28: Stop target position 29: PID deviation 30: Torque bias 31: Estimated inertia acceleration/deceleration time conversion value *101 32: Customizable logic output 50: PID command (final) in physical quantity *101 51: PID feedback amount (final) in physical quantity *101 52: PID output *101 53: PID control 1 command in physical quantity *101 54: PID control 1 feedback amount in physical quantity *101 55: PID control 2 command in physical quantity *101 56: PID control 2 feedback amount in physical quantity *101 60: External PID control 1 command (final) in physical quantity *101 61: External PID control 1 feedback amount (final) in physical quantity *101 62: External PID control 1 output in % *101 63: External PID control 1 manual command in % *101 64: External PID control 1 command in physical quantity *101 65: External PID control 1 feedback amount in physical quantity *101 70: External PID control 2 command in physical quantity *101 71: External PID control 2 feedback amount in physical quantity *101 72: External PID control 2 output in % *101 73: External PID control 2 manual command in % *101 80: External PID control 3 command in physical quantity *101 81: External PID control 3 feedback amount in physical quantity *101 82: External PID control 3 output in % *101 83: External PID control 3 manual command in % *101	Y	Y	0	5-204
E44	(Display when stopped)	0: Specified value 1: Output value	Y	Y	0	5-207

Function code	Name	Control method and Data setting range	Change when running	Data copying	Factory default	Related page
E48	LED monitor details (Speed monitor selection)	V/f PGV/f SLV PGV PM SLV PM PGV TRQ 0: Output frequency 1 (before slip compensation) 1: Output frequency 2 (after slip compensation) 2: Reference frequency 3: Motor rotation speed 4: Load rotation speed 5: Feed speed (Line speed) 6: Transport time for specified length 7: Speed (%) 8: Line speed set value 9: Line speed output value	Y	Y	0	5-207
E49	Torque Command Monitor (Polarity selection)	V/f PGV/f SLV PGV PM SLV PM PGV TRQ 0: Torque polarity 1: Plus for driving, Minus for braking	Y	Y	1	
E50	Display coefficient for speed monitor	V/f PGV/f SLV PGV PM SLV PM PGV TRQ 0.01 to 600.00	Y	Y	30.00	5-210
E51	Display coefficient for “Input watt-hour data”	V/f PGV/f SLV PGV PM SLV PM PGV TRQ 0.000 (Cancel/Reset), 0.001 to 9999	Y	Y	0.010	5-210

*1: Depends on the setting value of H101. Refer to Chapter 4 “4.4 Destination Setting”.

*3: The motor rated current is automatically set. Refer to Table 5.2-2 Motor constants (function code P03).

*100: Supported with ROM0300 or later.

*101: Supported with ROM0500 or later.

Function code	Name	Control method and Data setting range	Change when running	Data copying	Factory default	Related page
E52	Keypad menu selection	V/f PGV/f SLV PGV PMSLV PMPGV TRQ 0: Function code data setting mode (Menu 0, Menu 1, and Menu 7) 1: Function code data check mode (Menu 2 and Menu 7) 2: Full-menu mode	Y	Y	2	5-211
E54	Frequency detection 3 (Level)	V/f PGV/f SLV PGV PMSLV PMPGV TRQ 0.0 to 599.0 Hz	Y	Y	*1 *3	
E55	Current detection 3 (Level)	*Same as E34	Y	Y1 Y2	*1 *3	
E56	(Timer)	*Same as E35	Y	Y	10.00	
E57	Integral power pulse output unit	V/f PGV/f SLV PGV PMSLV PMPGV TRQ 0: Pulse output every 0.1 kWh 1: Pulse output every 1 kWh 2: Pulse output every 10 kWh 3: Pulse output every 100 kWh 4: Pulse output every 1000 kWh	Y	Y	1	5-212
E61	Terminal [12] extended function	V/f PGV/f SLV PGV PMSLV PMPGV TRQ 0: No extension function assignment 1: Auxiliary frequency setting 1 2: Auxiliary frequency setting 2 3: PID command 1 4: PID command 2 *101 5: PID feedback value 1 6: Ratio setting 7: Analog torque limit value A 8: Analog torque limit value B 9: Torque bias 10: Torque command 11: Torque current command 12: Acceleration/deceleration time ratio setting 13: Upper limit frequency 14: Lower limit frequency 15: Auxiliary frequency setting 3 16: Auxiliary frequency setting 4 17: Speed limit for forward rotation (FWD) 18: Speed limit for reverse rotation (REV) 19: For adjustment by manufacturer *101 20: Analog signal input monitor 30: PID feedback value 2 *101 31: Auxiliary input 1 to PID process command *101 32: Auxiliary input 2 to PID process command *101 33: Flowrate sensor *101 41: External PID process command 1 *101 42: External PID feedback value 1 *101 43: External PID manual command 1 *101 44: External PID process command 2 *101 45: Extarnal PID feedback value 2 *101 46: External PID manual command 2 *101 47: External PID process command 3 *101 48: External PID feedback value 3 *101 49: External PID manual command 3 *101	N	Y	0	
E62	Terminal [C1] (C1 function) (Extension function selection)		N	Y	0	
E63	Terminal [V2]		N	Y	0	
E64	Saving of digital reference frequency	V/f PGV/f SLV PGV PMSLV PMPGV TRQ 0: Auto saving (main power is turned off) 1: Save by turning FUNC/DATA key ON	Y	Y	0	5-215
E65	Reference loss detection (Continuous running frequency)	V/f PGV/f SLV PGV PMSLV PMPGV TRQ 0: Stop deceleration 20 to 120%, 999: Cancel	Y	Y	999	
E66	Terminal [C1] (V3 function) (Extension function selection)	*Same as E61	N	Y	0	5-212 5-216
E70	M/Shift key (Function selection)	See E70 in “Table 5.2-3 Control input terminal setting list table”.	N	Y	100	5-216
E71	M-LED indicator (Function selection)	See E71 in “Table 5.2-4 Control output terminal setting list table”.	N	Y	100	
E76	DC link bus low-voltage detection level	V/f PGV/f SLV PGV PMSLV PMPGV TRQ 200 to 400 V (200V series) 400 to 800 V (400V series)	Y	Y2	235 470	5-216
E78	Torque detection 1 (Level)	V/f PGV/f SLV PGV PMSLV PMPGV TRQ 0 to 300%	Y	Y	100	5-217
E79	(Timer)	V/f PGV/f SLV PGV PMSLV PMPGV TRQ 0.01 to 600.00 s	Y	Y	10.00	
E80	Torque detection 2/ low torque detection(Level)	Same as E78	Y	Y	20	
E81	(Timer)	*Same as E79	Y	Y	20.00	

Function code	Name	Control method and Data setting range	Change when running	Data copying	Factory default	Related page
E82	Switching Frequency of Accel/Decel Time in Low-Speed Domain *101	V/f PGV/f SLV PGV PM SLV PM PGV TRQ 0.0(Inherit): Depends on F16 0.1 to 599.0 Hz	Y	Y	0.0	5-218
E83	acceleration Time in Low-Speed Domain *101	0.0(Inherit): Follow the current acceleration time 0.1 to 6000: Acceleration time from 0 Hz to E82	Y	Y	0.00	
E84	Deceleration Time in Low-Speed Domain *101	0.00(Inherit): Follow the current deceleration time 0.01 to 6000: Deceleration time from E82 to 0 Hz	Y	Y	0.00	
E85	Gradual Deceleration Time Switching Frequncy *101	0.0 (OFF) : Disable 0.1 to 599.0 Hz	Y	Y	0.0	5-219
E86	Gradeal Deceleration Time (Check valve protection)*101	0.00(Inherit): Follow the current deceleration time 0.01 to 6000: Deceleration time from F16 to E85	Y	Y	0.00	
E98	Terminal [FWD] function	See E98, E99 in “Table 5.2-3 Control input terminal setting list table”.	N	Y	98	
E99	Terminal [REV] function		N	Y	99	

*1: Depends on the setting value of H101. Refer to Chapter 4 “4.4 Destination Setting”.
*3: The motor rated current is automatically set. Refer to Table 5.2-2 Motor constants (function code P03).
*101: Supported with ROM0500 or later.

[3] C codes: Control Functions of Frequency (Control function)

Function code	Name	Control method and Data setting range	Change when running	Data copying	Factory default	Related page
C01	Jump frequency 1	V/f PGV/f SLV PGV PMSLV PMPGV TRQ 0.0 to 599.0 Hz	Y	Y	0.0	5-220
C02	2		Y	Y	0.0	
C03	3		Y	Y	0.0	
C04	(Skip width)	0.0 to 30.0 Hz	Y	Y	3.0	
C05	Multistep frequency 1	V/f PGV/f SLV PGV PMSLV PMPGV TRQ 0.00 to 599.00 (Hz)	Y	Y	0.00	5-221
C06	2		Y	Y	0.00	
C07	3		Y	Y	0.00	
C08	4		Y	Y	0.00	
C09	5		Y	Y	0.00	
C10	6		Y	Y	0.00	
C11	7		Y	Y	0.00	
C12	8		Y	Y	0.00	
C13	9		Y	Y	0.00	
C14	10		Y	Y	0.00	
C15	11		Y	Y	0.00	
C16	12		Y	Y	0.00	
C17	13		Y	Y	0.00	
C18	14		Y	Y	0.00	
C19	15		Y	Y	0.00	
C20	Jogging frequency	V/f PGV/f SLV PGV PMSLV PMPGV TRQ 0.00 to 599.00 Hz	Y	Y	0.00	5-222
C21	Pattern operation / timed operation (Operation selection)	V/f PGV/f SLV PGV PMSLV PMPGV TRQ 0: 1 cycle operation 1: Repetition operation 2: Constant speed operation after 1 cycle operation 3: Timed operation	N	Y	0	5-223
C22	(Stage 1)	Special setting: Press the FUNC/DATA key 3 times. 1st: Set run time 0.0 to 6000 s and press the FUNC/DATA key. 2nd: Set rotational direction F (forward) or r (reverse) and press the FUNC/DATA key. 3rd: Set acceleration/deceleration time 1 to 4 and press the FUNC/DATA key.	Y	Y	1st: 0.00 2nd: F 3rd: 1	
C23	(Stage 2)		Y	Y		
C24	(Stage 3)		Y	Y		
C25	(Stage 4)		Y	Y		
C26	(Stage 5)		Y	Y		
C27	(Stage 6)		Y	Y		
C28	(Stage 7)		Y	Y		
C30	Frequency setting 2	Same as F01	N	Y	2	5-226
C31	Analog input adjustment (Terminal [12]) (Offset)	V/f PGV/f SLV PGV PMSLV PMPGV TRQ -5.0 to 5.0 %	Y*	Y	0.0	
C32	(Gain)	V/f PGV/f SLV PGV PMSLV PMPGV TRQ 0.00 to 400.00%	Y*	Y	100.00	
C33	(Filter)	V/f PGV/f SLV PGV PMSLV PMPGV TRQ 0.00 to 5.00 s	Y	Y	0.05	
C34	(Gain base point)	V/f PGV/f SLV PGV PMSLV PMPGV TRQ 0.00 to 100.00 %	Y*	Y	100.00	
C35	(polarity selection)	V/f PGV/f SLV PGV PMSLV PMPGV TRQ 0: Bipolar 1: Unipolar	N	Y	1	
C36	Analog input adjustment (Terminal [C1]) (C1 function) (Offset)	Same as C31	Y*	Y	0.0	
C37	(Gain)	Same as C32	Y*	Y	100.00	
C38	(Filter)	Same as C33	Y	Y	0.05	
C39	(Gain base point)	Same as C34	Y*	Y	100.00	
C40	(Operation selection)	V/f PGV/f SLV PGV PMSLV PMPGV TRQ 0: 4 to 20 mA Unipolar 1: 0 to 20 mA Unipolar 10: 4 to 20 mA Bipolar 11: 0 to 20 mA Bipolar	N	Y	0	

Function code	Name	Control method and Data setting range	Change when running	Data copying	Factory default	Related page
C41	Analog input adjustment (Terminal [V2]) (offset)	Same as C31	Y*	Y	0.0	5-226
C42	(Gain)	Same as C32	Y*	Y	100.00	
C43	(Filter)	Same as C33	Y	Y	0.05	
C44	(Gain base point)	Same as C34	Y*	Y	100.00	
C45	(polarity selection)	Same as C35	N	Y	1	
C50	Bias (for frequency setting 1) (Bias base point)	V/f PGV/f SLV PGV PMSLV PMPGV TRQ 0.00 to 100.00 %	Y*	Y	0.00	5-230
C51	Bias (PID command 1) (bias value)	V/f PGV/f SLV PGV PMSLV PMPGV TRQ -100.0 to 0.00 to 100.00%	Y*	Y	0.00	-
C52	(Bias base point)	0.00 to 100.00 %	Y*	Y	0.00	-
C53	Selection of normal/inverse operation (Frequency setting 1)	V/f PGV/f SLV PGV PMSLV PMPGV TRQ 0: Normal 1: Inverse	Y	Y	0	5-230
C54	(Frequency setting 2)		Y	Y	0	
C55	Analog input adjustment (Terminal [12]) (Bias)	V/f PGV/f SLV PGV PMSLV PMPGV TRQ -200.0 to 0.00 to 200.00%	Y*	Y	0.00	5-226
C56	(Bias base point)	0.00 to 100.00 %	Y*	Y	0.00	
C58	(Display unit)	Same as J105 (0 cannot be set.)	Y	Y	2	5-230
C59	(maximum scale)	-999.0 to 0.00 to 9990.0	N	Y	100.00	5-231
C60	(minimum scale)	-999.0 to 0.00 to 9990.0	N	Y	0.00	
C61	Analog input adjustment (Terminal [C1] (C1 function)) (Bias)	V/f PGV/f SLV PGV PMSLV PMPGV TRQ -200.0 to 0.00 to 200.00 %	Y*	Y	0.00	5-226
C62	(Bias base point)	0.00 to 100.00 %	Y*	Y	0.00	
C64	(Display unit)	Same as J105 (0 cannot be set.)	Y	Y	2	5-230
C65	(maximum scale)	-999.0 to 0.00 to 9990.0	N	Y	100.00	5-231
C66	(minimum scale)	-999.0 to 0.00 to 9990.0	N	Y	0.00	
C67	Analog input adjustment (Terminal [V2]) (Bias)	V/f PGV/f SLV PGV PMSLV PMPGV TRQ -200.0 to 0.00 to 200.00 %	Y*	Y	0.00	5-226
C68	(Bias base point)	0.00 to 100.00 %	Y*	Y	0.00	
C70	(Display unit)	Same as J105 (0 cannot be set.)	Y	Y	2	5-230
C71	(maximum scale)	-999.0 to 0.00 to 9990.0	N	Y	100.00	5-231
C72	(minimum scale)	-999.0 to 0.00 to 9990.0	N	Y	0.00	
C74	Analog input adjustment (Terminal [C1]) (V3 function) (Offset)	V/f PGV/f SLV PGV PMSLV PMPGV TRQ -5.0 to 5.0 %	Y*	Y	0.0	5-226
C75	(Gain)	0.00 to 400.00 %	Y*	Y	100.00	
C76	(Filter)	0.00 to 5.00 s	Y	Y	0.05	
C77	(Gain reference point)	0.00 to 100.00 %	Y*	Y	100.00	
C78	(Operation selection)	0: Bipolar 1: Unipolar	N	Y	1	
C82	(Bias)	-200.0 to 0.00 to 200.00 %	Y*	Y	0.00	
C83	(Bias reference point)	0.00 to 100.00 %	Y*	Y	0.00	
C84	(Display unit)	Same as J105 (0 cannot be set.)	Y	Y	2	5-230
C85	(Maximum scale)	-999.0 to 0.00 to 9990.0	N	Y	100.00	5-231
C86	(Minimum scale)	-999.0 to 0.00 to 9990.0	N	Y	0.00	
C89	Frequency compensation 1 via communication (Numerator)	V/f PGV/f SLV PGV PMSLV PMPGV TRQ -32768 to 32767 (Keypad display is 8000 to 7FFF (in hexadecimal)) (Interpreted as 1 when the value is set to 0)	Y	Y	h.0001	
C90	Frequency compensation 2 via communication (Denominator)		Y	Y	h.0001	
C94	Jump frequency 4	V/f PGV/f SLV PGV PMSLV PMPGV TRQ 0.0 to 599.0 Hz	Y	Y	0.0	5-220 5-231
C95	5		Y	Y	0.0	
C96	6		Y	Y	0.0	
C99	Digital setting frequency	V/f PGV/f SLV PGV PMSLV PMPGV TRQ 0.00 to Maxmum output frequency (1 to 4)	Y*	Y	0.00	5-231

[4] P codes: Motor 1 Parameters (Motor 1 parameters)

Function code	Name	Control method and Data setting range	Change when running	Data copying	Factory default	Related page
P01	Motor 1 (No. of poles)	V/f PGV/f SLV PGV PM SLV PM PGV TRQ 2 to 128 poles	N	Y1Y2	4	5-232
P02	(Rated capacity)	0.01 to 1000 kW (At P99 = 0 or 2 to 5, 20 to 23) 0.01 to 1000 HP (At P99 = 1)	N	Y1Y2	*1 *6	
P03	(Rated current)	0.00 to 2000 A	N	Y1Y2	*1 *6	
P04	(Auto-tuning)	0: Disable 1: Stop tuning 2: Rotation tuning 4: Synchronous motor magnetic pole position offset tuning 5: Stop tuning (%R1, %X only)	N	N	0	5-233
P05	(Online tuning)	V/f PGV/f SLV PGV PM SLV PM PGV TRQ 0: 0: Disable, 1: Enable	Y	Y	0	5-234
P06	(No-load current)	V/f PGV/f SLV PGV PM SLV PM PGV TRQ 0.00 to 2000A	N	Y1Y2	*1 *6	5-235
P07	(%R1)	0.00 to 50.00%	Y	Y1Y2	*1 *6	
P08	(%X)	0.00 to 50.00%	Y	Y1Y2	*1 *6	
P09	(Slip compensation gain for driving)	V/f PGV/f SLV PGV PM SLV PM PGV TRQ 0.0 to 200.0%	Y*	Y	100.0	
P10	(Slip compensation response time)	V/f PGV/f SLV PGV PM SLV PM PGV TRQ 0.01 to 10.00 s	Y	Y1Y2	0.5	
P11	(Slip compensation gain for braking)	V/f PGV/f SLV PGV PM SLV PM PGV TRQ 0.0 to 200.0 %	Y*	Y	100.0	
P12	(Rated slip frequency)	V/f PGV/f SLV PGV PM SLV PM PGV TRQ 0.00 to 15.00 Hz	N	Y1Y2	*1 *6	5-236
P13	(Iron loss factor 1)	V/f PGV/f SLV PGV PM SLV PM PGV TRQ 0.00 to 20.00%	Y	Y1Y2	*6	
P14	(Iron loss factor 2)	0.00 to 20.00%	Y	Y1Y2	0.00	
P15	(Iron loss factor 3)	0.00 to 20.00%	Y	Y1Y2	0.00	
P16	(Magnetic saturation factor 1)	0.0 to 300.0%	Y	Y1Y2	*6	
P17	(Magnetic saturation factor 2)	0.0 to 300.0%	Y	Y1Y2	*6	
P18	(Magnetic saturation factor 3)	0.0 to 300.0%	Y	Y1Y2	*6	
P19	(Magnetic saturation factor 4)	0.0 to 300.0%	Y	Y1Y2	*6	
P20	(Magnetic saturation factor 5)	0.0 to 300.0%	Y	Y1Y2	*6	
P21	(Magnetic saturation expansion coefficient a)	0.0 to 300.0%	Y	Y1Y2	*6	
P22	(Magnetic saturation expansion coefficient b)	0.0 to 300.0%	Y	Y1Y2	*6	
P23	(Magnetic saturation expansion coefficient c)	0.0 to 300.0%	Y	Y1Y2	*6	
P24	(Load inertia)	V/f PGV/f SLV PGV PM SLV PM PGV TRQ 0.000 to 99.990 s	Y	Y1Y2	0.000	5-236
P30	(Synchronous motor magnetic pole position detection method selection)	V/f PGV/f SLV PGV PM SLV PM PGV TRQ 0: Pull-in by current 1: For IPMSM (Interior permanent magnet synchronous motor) 2: For SPMSM (Surface permanent magnet synchronous motor) 3: Pull-in by current for IPMSM (Interior permanent magnet synchronous motor) 4: High-frequency superimposing method for IPMSM	N	Y1Y2	1	
P40	(For adjustment by manufacturer)*9	0 to 100	Y	Y1Y2	15	5-239
P41	(For adjustment by manufacturer)*9	-50.0 to 50.0	Y	Y1Y2	1.0	
P53	(%X correction factor 1)	V/f PGV/f SLV PGV PM SLV PM PGV TRQ 0 to 300%	Y	Y1Y2	100	
P54	(%X correction factor 2)	0 to 300%	Y	Y1Y2	100	
P55	(Torque current under vector control)	V/f PGV/f SLV PGV PM SLV PM PGV TRQ 0.00 to 2000 A	N	Y1Y2	*1 *6	
P56	(Induced voltage factor under vector control)	50 to 100%	N	Y1Y2	*6	
P57	(For adjustment by manufacturer) *9	0.000 to 20.000	Y	Y1Y2	*6	

Function code	Name	Control method and Data setting range	Change when running	Data copying	Factory default	Related page
P60	(For Synchronous motor) (Armature resistance)	V/f PGV/f SLV PGV PM SLV PM PGV TRQ 0.000 to 50.000 Ω (phase)	N	Y1Y2	*7	5-239
P61	(d-axis inductance)	0.00 to 500.00 mH (phase)	N	Y1Y2	*7	
P62	(q-axis inductance)	0.00 to 500.00 mH (phase)	N	Y1Y2	*7	
P63	(Induced voltage)	80 to 240 V (200V class); 160 to 500 V (400V class)	N	Y1Y2	*7	
P64	(Iron loss)	0.0 to 20.0% (Iron loss based on the capacity of the motor, base speed)	Y	Y1Y2	*7	
P65	(q-axis inductance magnetic saturation correction)	0.0 to 100.0% (100% = No magnetic saturation) ; 999 (factory adjustment value)	Y	Y1Y2	999	
P74	(Current command value when starting)	10 to 200% (100%= motor rated current)	Y*	Y1Y2	80 *7	
P83	(For adjustment by manufacturer) *9	0.0 to 50.0; 999	Y	Y1Y2	999	
P84	(For adjustment by manufacturer) *9	0.0 to 100.0; 999	N	Y1Y2	999	
P85	(Flux limitation value)	50.0 to 150.0; 999	Y	Y1Y2	999	
P86	(For adjustment by manufacturer) *9	0.0 to 100.0	N	N	0.0	
P87	(NS discrimination current command value)	V/f PGV/f SLV PGV PM SLV PM PGV TRQ 0 to 200% (100% = Motor rated current)	N	Y1Y2	60	5-240
P88	(For adjustment by manufacturer) *9	0 to 100; 999	N	Y1Y2	999	
P89	(Control switching level)	V/f PGV/f SLV PGV PM SLV PM PGV TRQ 0; 1 to 100	N	Y1Y2	0	
P90	(Overcurrent protection level)	V/f PGV/f SLV PGV PM SLV PM PGV TRQ 0.00 (cancel); 0.01 to 4000 A	N	Y1Y2	*7	
P95	(Magnetic pole position sensor offset)	V/f PGV/f SLV PGV SLV PM SLV PM PGV TRQ 0.0 to 359.9 degree; 999 (offset not set)	Y	Y	999	
P99	Motor 1 selection	V/f PGV/f SLV PGV PM SLV PM PGV TRQ The setting range is 0 to 5 when F42 = 0 to 6, and 20 to 23 when F42 = 15 or 16. 0: Motor characteristics 0 (Fuji standard IM, 8-series) 1: Motor characteristics 1 (HP rating IMs) 2: Motor characteristics 2 (Fuji dedicated motors for vector control) 3: Motor characteristics 3 (Refer to the description of function code P99 when using Fuji standard IM, 6-series) 4: Other IMs 5: Motor characteristics 5 (Fuji premium efficiency motors) 20: Other (synchronous motors) 21: Motor characteristics (Fuji synchronous motor (GNB2 series)) 22: Motor characteristics (Fuji synchronous motor (GNF2 series)) 23: Motor characteristics (Fuji synchronous motor (GNP1 series))	N	Y1Y2	*1	5-241

*1: Depends on the setting value of H101. Refer to Chapter 4 “4.4 Destination Setting”.
*6: Factory defaults are depended on motor capacity.
*7: The constant for Fuji standard synchronous motor GNB series is set as the factory default.
*9: This is a function code for adjustment by the manufacturer. Do not access these function codes.

[5] H codes: High Performance Functions (High level functions)

Function code	Name	Control method and Data setting range	Change when running	Data copying	Factory default	Related page
H00	Simulated operation mode	V/f PGV/f SLV PGV PMSLV PMPGV TRQ 0: Normal operation 1: Simulated operation mode	N	Y	0	5-243
H02	Data initialization (Method)	V/f PGV/f SLV PGV PMSLV PMPGV TRQ 0: Standard 1: User preference dataset (setting value saved when using H193, H194)	Y	Y	0	5-244
H03	Data initialization	0: Manual setting value 1: Initialization (based on H02 setting) 2: Motor 1 constant initialization 3: Motor 2 constant initialization 4: Motor 3 constant initialization 5: Motor 4 constant initialization 11: Limited initialization (initialization excluding communication function codes) 12: Limited initialization (initialization of customizable logic U codes) 13: Limited initialization (clearing of favorites)	N	N	0	
H04	Auto-reset (Times)	V/f PGV/f SLV PGV PMSLV PMPGV TRQ 0: Disable, 1 to 20: Number of retries	Y	Y	0	5-247
H05	(Interval)	0.5 to 20.0 s	Y	Y	5.0	
H06	Cooling fan ON/OFF control	V/f PGV/f SLV PGV PMSLV PMPGV TRQ 0: Disable (Always Fan ON) 1: Enable (ON/OFF control effective)	Y	Y	0	5-248
H07	Curve acceleration/deceleration	V/f PGV/f SLV PGV PMSLV PMPGV TRQ 0: Disable (Linear acceleration/deceleration) 1: S-curve acceleration/deceleration (Weak) 2: S-curve acceleration/deceleration (Arbitrary: According to H57 to H60) 3: Curve acceleration/deceleration	Y	Y	0	
H08	Rotation direction restriction	V/f PGV/f SLV PGV PMSLV PMPGV TRQ 0: Disable 1: Enable (Reverse rotation inhibited) 2: Enable (Forward rotation inhibited)	N	Y	0	
H09	Starting mode (Auto search)	V/f PGV/f SLV PGV PMSLV PMPGV TRQ 0: Disable 1: Enable (Only at restart after momentary power failure) 2: Enable (At normal start and at restart after momentary power failure)	N	Y	0	5-249
H11	Deceleration mode	V/f PGV/f SLV PGV PMSLV PMPGV TRQ 0: Normal deceleration, 1: Coast to stop	Y	Y	0	5-251
H12	Instantaneous overcurrent limiting (Mode selection)	V/f PGV/f SLV PGV PMSLV PMPGV TRQ 0: Disable, 1: Enable	Y	Y	1	
H13	Restart mode after momentary power failure (Restart timer)	V/f PGV/f SLV PGV PMSLV PMV TRQ 0.1 to 20.0 s	Y	Y1Y2	*2	
H14	(Frequency fall rate)	V/f PGV/f SLV PGV PMSLV PMPGV TRQ 0.00: Selected deceleration time, 0.01 to 100.00 Hz/s, 999 (According to current limiter)	Y	Y	999	
H15	(Continuous running level)	V/f PGV/f SLV PGV PMSLV PMPGV TRQ 200 to 300 V: (200 V series) 400 to 600 V: (400 V series)	Y	Y2	235 470	
H16	(Permissible momentary power failure time)	0.0 to 30.0 s, 999 (Depend on inverter judgment)	Y	Y	999	
H18	Torque control (Mode selection)	V/f PGV/f SLV PGV PMSLV PMPGV TRQ 0: Disable (Speed control) 2: Function (Torque current command) 3: Function (Torque command)	N	Y	0	5-252
H26	Motor 1 (Thermistor operation selection)	V/f PGV/f SLV PGV PMSLV PMPGV TRQ 0: Disable 1: PTC: OH4 trip and stop the inverter 2: PTC: Output motor overheat detected “THM” and continue to run 3: NTC: OH4 trip and stop the inverter	Y	Y	0	5-255
H27	(Operation level)	0.00 to 5.00 V	Y	Y	0.35	
H28	Droop control	V/f PGV/f SLV PGV PMSLV PMPGV TRQ -60.0 to 0.0 Hz	Y	Y	0.0	5-257

Function code	Name	Control method and Data setting range	Change when running	Data copying	Factory default	Related page
H30	Communication link function (Mode selection)	V/f PGV/f SLV PGV PM SLV PM PGV TRQ **Frequency setting/torque command** / **Run command** 0: F01/C30 / F02 1: RS-485 communication (Port 1) / F02 2: F01/C30 / RS-485 communication (Port 1) 3: RS-485 communication (Port 1) / RS-485 communication (Port 1) 4: RS-485 communication (Port 2) / F02 5: RS-485 communication (Port 2) / RS-485 communication (Port 1) 6: F01/C30 / RS-485 communication (Port 2) 7: RS-485 communication (Port 1) / RS-485 communication (Port 2) 8: RS-485 communication (Port 2) / RS-485 communication (Port 2)	Y	Y	0	5-258
H31	Link function (Actual terminal operation selection)	0: Disable 1: Enable	N	Y	0	
H42	Capacitance of DC link bus capacitor	V/f PGV/f SLV PGV PM SLV PM PGV TRQ For adjustment when carrying out replacement, 0 to 65535	Y	N	-	5-261
H43	Cumulative run time of cooling fan	V/f PGV/f SLV PGV PM SLV PM PGV TRQ For adjustment when carrying out replacement, 0 to 99990 hours (updated in 10 hour units) Displays the cumulative run time for the cooling fan	Y	N	0	
H44	Startup count for motor 1	V/f PGV/f SLV PGV PM SLV PM PGV TRQ For adjustment when carrying out replacement, 0 to 65535 times	Y	N	-	5-265
H45	Mock alarm	V/f PGV/f SLV PGV PM SLV PM PGV TRQ 0: Disable 1: Occurrence of mock alarm	Y	N	0	
H46	Starting mode (Auto search delay time 2)	V/f PGV/f SLV PGV PM SLV PM PGV TRQ 0.1 to 20.0 s	Y	Y1Y2	*6	
H47	Initial capacitance of DC link bus capacitor	V/f PGV/f SLV PGV PM SLV PM PGV TRQ For adjustment when carrying out replacement, 0 to 65535	Y	N	-	
H48	Cumulative run time of capacitors on printed circuit boards	V/f PGV/f SLV PGV PM SLV PM PGV TRQ For adjustment when carrying out replacement, 0 to 99990 hours (updated in 10 hour units) Change in cumulative motor run time (reset also possible)	Y	N	0	5-261 5-265
H49	Starting mode (Auto search delay time 1)	V/f PGV/f SLV PGV PM SLV PM PGV TRQ 0.0 to 10.0 s	Y	Y	0.0	5-266
H50	Non-linear V/f 1 (Frequency)	V/f PGV/f SLV PGV PM SLV PM PGV TRQ 0.0 (Cancel), 0.1 to 599.0 Hz	N	Y	0.0 *21	
H51	(Voltage)	0 to 240 V: AVR operation (200 V series) 0 to 500 V: AVR operation (400 V series)	N	Y2	0 *22	
H52	Non-linear V/f 2	Same as H50	N	Y	0.0	
H53	(Voltage)	Same as H51	N	Y2	0	
H54	Acceleration time (Jogging)	V/f PGV/f SLV PGV PM SLV PM PGV TRQ 0.00 to 6000 s	Y	Y	*10	
H55	Deceleration time (Jogging)		Y	Y	*10	

*2: Factory defaults are depended on motor capacity. Refer to Table 5.2-1 Factory default settings by inverter capacity.
*6: Factory defaults are depended on motor capacity.
*10: 6.00 s for FRN0003 to 0115G2S-2G/FRN0002 to 0060G2□-4G, 20.00 s for FRN0146 to 0432G2S-2G/FRN0085 to 1480G2□-4G
*21: If F37 = 0, 3: 5.0 Hz is automatically set for FRN0146 to 0432G2S-2G/FRN0085 to 1480G2□-4G.
*22: If F37 = 0, 3: 20 V is automatically set for FRN0146 to 0432G2S-2G, and 40 V is set for FRN0085 to 1480G2□-4G.

Function code	Name	Control method and Data setting range	Change when running	Data copying	Factory default	Related page
H56	Deceleration time for forced stop	V/f PGV/f SLV PGV PM SLV PM PGV TRQ 0.00 to 6000 s	Y	Y	*10	5-266
H57	1st S-curve acceleration range (At starting)	V/f PGV/f SLV PGV PM SLV PM PGV TRQ 0 to 100 %	Y	Y	10	
H58	2nd S-curve acceleration range (At arrival)		Y	Y	10	
H59	1st S-curve deceleration range (At starting)		Y	Y	10	
H60	2nd S-curve deceleration range (At arrival)		Y	Y	10	
H61	UP/DOWN control (Initial frequency setting)	V/f PGV/f SLV PGV PM SLV PM PGV TRQ 0: Initial value is 0.00 Hz (G1S compatible operation) 1: Last UP/DOWN command value on releasing the run command. 2: Initial value is 0.00 Hz. 3: Initial value is frequency set with UP/DOWN command immediately before	N	Y	3	
H62	UP/DOWN control - extension function selection	V/f PGV/f SLV PGV PM SLV PM PGV TRQ Same as E61 (However, 5, 19, 30, 33, 42, 45, and 48 cannot be selected.)	N	Y	0	
H63	Low limiter (Operation selection)	V/f PGV/f SLV PGV PM SLV PM PGV TRQ 0: Limit by F16 (Frequency limiter: Low) and continue to run 1: If the output frequency lowers below the one limited by F16 (Frequency limiter: Low), decelerate to stop the motor.	Y	Y	0	
H64	(Minimum frequency when performing limiting operation)	V/f PGV/f SLV PGV PM SLV PM PGV TRQ 0.0: Limit by F16 (Frequency limiter: Low) 0.1 to 599.0 (Hz) *15	Y	Y	1.6	
H65	Non-linear V/f 3 (Frequency)	V/f PGV/f SLV PGV PM SLV PM PGV TRQ 0.0 (Cancel), 0.1 to 599.0 Hz	N	Y	0.0	
H66	(Voltage)	0 to 240 V: AVR operation (200 V series) 0 to 500 V: AVR operation (400 V series)	N	Y2	0	
H67	Auto energy-saving operation (Mode selection)	V/f PGV/f SLV PGV PM SLV PM PGV TRQ 0: Enable only during constant speed 1: Enable for all modes	Y	Y	0	
H68	Slip compensation 1 (Operating conditions selection)	V/f PGV/f SLV PGV PM SLV PM PGV TRQ 0: Enable during acceleration/deceleration, enable at base frequency or higher 1: Disable during acceleration/deceleration, enable at base frequency or higher 2: Enable during acceleration/deceleration, disable at base frequency or higher 3: Disable during acceleration/deceleration, disable at base frequency or higher	N	Y	0	
H69	Anti-regenerative control (Operation selection)	V/f PGV/f SLV PGV PM SLV PM PGV TRQ 0: Disable 2: Torque limit control with force-to-stop (Cancel limit control after three times of deceleration time has passed) 3: DC link bus voltage control with force-to-stop (Cancel voltage control after three times of deceleration time has passed) 4: Torque limit control without force-to-stop 5: DC link bus voltage control without force-to-stop	Y	Y	0	5-267
H70	Overload prevention control	V/f PGV/f SLV PGV PM SLV PM PGV TRQ 0.00: Follow the deceleration time selected 0.01 to 100.00 Hz/s, 999 (Cancel)	Y	Y	999	5-268
H71	Deceleration characteristic	V/f PGV/f SLV PGV PM SLV PMV TRQ 0: Disable, 1: Enable 2: Enable (AVR cancel)	Y	Y	0	
H72	Main power shutdown detection (Mode selection)	V/f PGV/f SLV PGV PM SLV PM PGV TRQ 0: Disable, 1: Enable	Y	Y	1	5-269
H73	Torque limiter (Operating conditions selection)	V/f PGV/f SLV PGV PM SLV PM PGV TRQ 0: Enable during acceleration/deceleration, enable during constant speed 1: Disable during acceleration/deceleration, enable during constant speed 2: Enable during acceleration/deceleration, disable during constant speed	N	Y	0	
H74	Torque limiter(Control target)	V/f PGV/f SLV PGV PM SLV PM PGV TRQ 0: Torque limit control 1: Torque current limit 2: Power limit	N	Y	1	
H75	(Applicable quadrant)	0: Drive/braking 1: 4 identical quadrants 2: Upper limit/lower limit 3: 4 independent quadrants	N	Y	0	
H76	Torque limiter (Braking) (Frequency rising limiter for braking)	V/f PGV/f SLV PGV PM SLV PM PGV TRQ 0.0 to 599.0 Hz	Y	Y	5.0	
H77	Service life of DC link bus capacitor	V/f PGV/f SLV PGV PM SLV PM PGV TRQ 0 to 87600 hours (updated in 10 hour units)	Y	N	87600	
H78	Maintenance interval (M1)	0 (Disable), 1 to 99990 hours (updated in 10 hour units)	Y	N	87600	5-270
H79	Preset startup count for maintenance (M1)	0 (Disable), 1 to 65535 times	Y	N	0	5-271
H80	Output current fluctuation damping gain for motor 1	V/f PGV/f SLV PGV PM SLV PM PGV TRQ 0.00 to 1.00	Y	Y	0.20	

Function code	Name	Control method and Data setting range	Change when running	Data copying	Factory default	Related page
H81	Warning selection 1	V/f PGV/f SLV PGV PM SLV PM PGV TRQ 0000 to FFFF (in hexadecimal)	Y	Y	0000	5-272
H82	Warning selection 2		Y	Y	0000	
H83	Warning selection 3		Y	Y	0000	
H84	Pre-excitation (Level)	V/f PGV/f SLV PGV PM SLV PM PGV TRQ 100 to 400 % (Motor rated magnetizing current for 100 %)	Y	Y	100	5-276
H85	(Braking time)	0.00: Disable 0.01 to 30.00 s	Y	Y	0.00	
H86	For adjustment by manufacturer *9	0 to 2	Y	Y	0	5-278
H89	Electronic thermal overload protection for motor 1 to 4 (data retention)	0: The integrated value for electronic thermal overload relays 1 to 4 is cleared when the power is turned OFF and ON again. 1: Retains the integrated value for electronic thermal overload relays 1 to 4 even when the power is OFF.	Y	Y	1	
H90	For adjustment by manufacturer *9	0, 1	Y	Y	0	
H91	Current input wire break detection	V/f PGV/f SLV PGV PM SLV PM PGV TRQ 0.0 (Alarm disable): 0.1 to 60.0 s	Y	Y	0.0	
H92	Continuous running at the momentary power failure (P)	V/f PGV/f SLV PGV PM SLV PM PGV TRQ 0.000 to 10.000 times 999: Manufacturer adjustment value	Y	Y1 Y2	999	
H93	(I)	0.010 to 10.000 s 999: Manufacturer adjustment value	Y	Y1 Y2	999	
H94	Cumulative run time of motor 1	V/f PGV/f SLV PGV PM SLV PM PGV TRQ 0 to 99990 hours (updated in 10 hour units) Change in cumulative motor run time (reset possible)	N	N	-	5-270 5-278
H95	DC braking (Braking response mode)	V/f PGV/f SLV PGV PM SLV PM SLV TRQ 0: Slow response 1: Quick response	Y	Y	1	5-120 5-278
H96	STOP key priority/ Start check/ RUN key save function *101	V/f PGV/f SLV PGV PM SLV PM PGV TRQ 0: STOP key priority disable/ Start check function disable 1: STOP key priority enable/ Start check function disable 2: STOP key priority disable/ Start check function enable 3: STOP key priority enable/ Start check function enable 4: STOP key priority disable/ Start check function disable/ RUN key save enable 5: STOP key priority enable/ Start check function disable/ RUN key save enable	Y	Y	*1	5-279
H97	Clear alarm data	V/f PGV/f SLV PGV PM SLV PM PGV TRQ 0: Disable 1: Clear alarm data (Automatically return to 0 after clearing data)	Y	N	0	5-280
H98	Protection/Maintenance function (Operation selection)	V/f PGV/f SLV PGV PM SLV PM PGV TRQ 0 to 255 (Data is displayed in decimal) 0: Disable; 1: Enable) Bit 0: Lower the carrier frequency automatically (0: Disable; 1: Enable) *17 Bit 1: Input phase loss protection (0: Disable; 1: Enable) Bit 2: Output phase loss protection (0: Disable; 1: Enable) Bit 3: DC link bus capacitor life judgment selection (0: Factory default referenced; 1: User measurement value standard) Bit 4: Judge the life of DC link bus capacitor (0: Disable; 1: Enable) Bit 5: Detect DC fan lock (0: Enable; 1: Disable) Bit 6: Braking transistor error detection (0: Disable; 1: Enable) Bit 7: IP20/IP40 switching (0: IP20 ; 1: IP40)	Y	Y	*16	
H99	Password function password 2 Setting/comparison	V/f PGV/f SLV PGV PM SLV PM PGV TRQ 0000 to FFFF (in hexadecimal)	Y	N	h.0000	5-283

*1: Depends on the setting value of H101. Refer to Chapter 4 “4.4 Destination Setting”.
*9: This is a function code for adjustment by the manufacturer. Do not access these function codes.
*15: When the sensorless vector control for PM is set to less than 10% of F04 (base frequency), the internal operation of H64 is limited to the P89 setting (%) of F04.
*16: FRN0003 to 0288G2S-2G / FRN0002 to 0217G2□-4G: 83 (decimal display),
FRN0346, 0432G2S-2G / FRN0261 to 1480G2□-4G: 19 (decimal display)
*17: When F42 = 15 or 16 sensorless vector control (synchronous motors), the automatic carrier frequency reduction function does not work. ROM0300 or later.
*101: Supported with ROM0500 or later.

[6] H1 codes: High Performance Functions (High level functions)

Function code	Name	Control method and Data setting range	Change when running	Data copying	Factory default	Related page
H101	Destination setting	V/f PGV/f SLV PGV PM SLV PM PGV TRQ 0: Not selected 1: Japan 2: Asia 3: China 4: Europe 5: Americas 6: East Asia (Taiwan,etc.)	N	Y	0	5-286
H104	Number-of-retry Clear Time *101	0.5 to 5.0 min	Y	Y	5.0	
H105	Retry target selection 1 *101	0 to 127	Y	Y	127	5-287
H106	Retry target selection 2 *101	0 to 3	Y	Y	0	
H110	OL Prevention (Lin Op) *101	V/f PGV/f SLV PGV PM SLV PM PGV TRQ 0: Inactive 1: Active	Y	Y	0	
H112	OL Prevention (LV Op) *101	0: Inactive 1: Active	Y	Y	0	
H114	Anti-regenerative control (Operation level)	V/f PGV/f SLV PGV PM SLV PM PGV TRQ 0.0 to 50.0 %, 999 (Auto)	Y	Y	999	5-267 5-288
H116	Forced operation (Operation selection)	V/f PGV/f SLV PGV PM SLV PM PGV TRQ 0: [FMS] ON (Mode 1) 1: [FMS] ON/OFF toggle method (Mode 1) 2: [FMS] ON latch method (Mode 1) 10: [FMS] ON (Mode 2) 11: [FMS] ON/OFF toggle method (Mode 2) 12: [FMS] ON latch method (Mode 2) 20: [FMS] ON (Mode 3) 21: [FMS] ON/OFF toggle method (Mode 3) 22: [FMS] ON latch method (Mode 3)	N	N	0	5-288
H117	(Confirmation time)	0.5 to 10.0s	Y	Y	3.0	
H118	(Set frequency)	0.0 (Inherit): Based on normal set frequency such as F01 0.1 to 599.0 Hz	Y	Y	0.0	
H119	(Operation direction)	0: Based on normal run command such as F02 2: Forward rotation 3: Reverse rotation	Y	N	0	
H120	(Starting method)	0: Based on normal starting method 1: Auto search (Speed search)	Y	Y	0	
H121	(Wait time)	0.5 to 20.0 s	Y	Y	5.0	
H130	For special adjustment (Torque limiting)	V/f PGV/f SLV PGV PM SLV PM PGV TRQ 0.000 to 2.000; 999	Y	Y	999	5-290
H131	(Torque limiting)	0.000 ; 0.001 to 9.999 ; 999	Y	Y	999	
H132	(Torque limiting)	0.000 ; 0.001 to 9.999 ; 999	Y	Y	999	
H133	(Anti-regenerative control)	0.000 to 2.000; 999	Y	Y	999	
H134	(Anti-regenerative control)	0.000 ; 0.001 to 9.999 ; 999	Y	Y	999	
H135	(Anti-regenerative control)	0.000 ; 0.001 to 9.999 ; 999	Y	Y	999	
H136	(Current limiting)	0.00 to 1.00; 999	Y	Y	999	
H137	(Current limiting)	0.001 to 10.000; 999	Y	Y	999	
H147	Speed control (JOG) FF (Gain)	V/f PGV/f SLV PGV PM SLV PM PGV TRQ 0.00 to 99.99 s	Y*	Y	0.00	5-290 5-434
H154	Torque bias (Mode selection)	V/f PGV/f SLV PGV PM SLV PM PGV TRQ 0: Disable 1: Digital torque bias 2: Analog torque bias 3: RS-485 communications link (port 1) 4: RS-485 communications link (port 2) 5: Fieldbus link	N	Y	0	5-291
H155	(Level 1)	-300 to +300 %	Y	Y	0	
H156	(Level 2)	-300 to +300 %	Y	Y	0	
H157	(Level 3)	-300 to +300 %	Y	Y	0	
H158	(Mechanical loss compensation)	0 to 300 %	Y	Y	0	
H159	(Startup timer)	0.00 to 1.00 s	N	Y	0.00	
H161	(Shutdown timer)	0.00 to 1.00 s	N	Y	0.00	
H162	(Limiter)	0 to 300 %	N	Y	200	
H173	Magnetic flux level at light load	V/f PGV/f SLV PGV PM SLV PM PGV TRQ 10 to 100 %	Y	Y	100	5-292
H180	Brake control signal (Check-timer for brake operation)	V/f PGV/f SLV PGV PM SLV PM PGV TRQ 0.00 to 10.00 s	Y	Y	1.00	5-292 5-320

Function code	Name	Control method and Data setting range	Change when running	Data copying	Factory default	Related page
H190	Motor output phase sequence selection	V/f PGV/f SLV PGV PM SLV PM PGV TRQ 0: No phase sequence change 1: Terminal [U]: outputs U phase, terminal [V]: outputs W phase, terminal [W]: outputs V phase	N	Y	0	5-293
H193	User preference dataset (Save)	V/f PGV/f SLV PGV PM SLV PM PGV TRQ 0: Disable 1: Save	N	N	0	5-246 5-293
H194	(Protection)	0: Save enable 1: Protected (Save disable)	Y	Y	0	
H195	DC braking (Braking timer at the startup)	V/f PGV/f SLV PGV PM SLV PM PGV TRQ 0.00 (Disable): 0.01 to 30.00 s PM SLV is valid only when P30 = 0	Y	Y	0.00	5-120 5-293
H196	For adjustment by manufacturer *9	0.001 to 9.999, 999	Y	Y	999	5-293
H197	User password 1 (Selection of protective operation)	V/f PGV/f SLV PGV PM SLV PM PGV TRQ 0: All function codes are disclosed, but the change is not allowed. 1: Only the function code registered in “Favorites” can be disclosed/changed. 2: Only the function code for customize logic setting is not disclosed/not changed.	Y	Y	0	5-283 5-293
H198	User password 1 (Setting/check)	0000 to FFFF (in hexadecimal)	Y	N	h.0000	
H199	User password protection valid	V/f PGV/f SLV PGV PM SLV PM PGV TRQ 0: Disable 1: Protected	Y	N	0	

*9: This is a function code for adjustment by the manufacturer. Do not access these function codes.

*101: Supported with ROM0500 or later.

[7] A codes: Motor 2 Parameters (Motor 2 parameters)

Function code	Name	Control method and Data setting range	Change when running	Data copying	Factory default	Related page
A01	Maximum output frequency 2	V/f PGV/f SLV PGV PM SLV PM PGV TRQ 5.0 to 599.0 Hz	N	Y	*1	5-294 ~ 5-297
A02	Base frequency 2	V/f PGV/f SLV PGV PM SLV PM PGV TRQ 5.0 to 599.0 Hz	N	Y	*1	
A03	Rated voltage at base frequency 2	V/f PGV/f SLV PGV PM SLV PM PGV TRQ 0: AVR disable (output voltage proportional to power voltage) 80 to 240 V: AVR operation (200 V series) 160 to 500 V: AVR operation (400 V series)	N	Y2	*1	
A04	Maximum output voltage 2	V/f PGV/f SLV PGV PM SLV PM PGV TRQ 80 to 240 V: AVR operation (200 V series) 160 to 500 V: AVR operation (400 V series)	N	Y2		
A05	Torque boost 2	V/f PGV/f SLV PGV PM SLV PM PGV TRQ 0.0 to 20.0 % (% value against base frequency voltage 2)	Y	Y	*1 *2	
A06	Electronic thermal overload protection for motor 2 (Select motor characteristics)	V/f PGV/f SLV PGV PM SLV PM PGV TRQ 1: Enable (for a general-purpose motor with self-cooling fan) 2: Enable (for an inverter-driven motor with separately powered cooling fan)	Y	Y	1	
A07	(Operation level)	0.00 (disable), current value of 1 to 135 % of inverter rated current set with A unit	Y	Y1Y2	*1 *3	
A08	(Thermal time constant)	0.5 to 75.0 min	Y	Y	*11	
A09	DC braking 2 (starting frequency)	V/f PGV/f SLV PGV PM SLV PM PGV TRQ 0.0 to 60.0 Hz	Y	Y	0.0	
A10	(Operation level)	0 to 100 % (HHD specification), 0 to 80 % (HND specification)	Y	Y	0	
A11	(Braking time)	0.00 (disable): 0.01 to 30.00 s	Y	Y	0.00	
A12	Starting frequency 2	V/f PGV/f SLV PGV PM SLV PM PGV TRQ 0.0 to 60.0 Hz	Y	Y	0.5	
A13	Load selection/ Auto torque boost/ Auto energy-saving operation 2	V/f PGV/f SLV PGV PM SLV PM PGV TRQ 0: Quadratic-torque load 1: Constant torque load 2: Auto torque boost 3: Auto energy-saving operation (quadratic-torque load) 4: Auto energy-saving operation (constant torque load) 5: Auto energy-saving operation with auto torque boost	N	Y	1	
A14	Drive control selection 2	V/f PGV/f SLV PGV PM SLV PM PGV TRQ 0: V/f control without slip compensation 1: Dynamic torque vector control 2: V/f control with slip compensation 3: V/f control with sensor 4: Dynamic torque vector control with sensor 5: Sensorless vector control 6: Vector control with sensor	N	Y	0	
A15	Motor 2 (No. of poles)	V/f PGV/f SLV PGV PM SLV PM PGV TRQ 2 to 128 poles	N	Y1Y2	4	
A16	(Rated capacity)	0.01 to 1000 kW (when A39 = 0,2 to 5) 0.01 to 1000 HP (At P39 = 1)	N	Y1Y2	*1 *6	
A17	(Rated current)	0.00 to 2000 A	N	Y1Y2	*1 *6	
A18	(Auto-tuning)	V/f PGV/f SLV PGV PM SLV PM PGV TRQ 0: Disable 1: Tune the motor while it is stopped 2: Rotation tuning 5: Stop tuning (%R1, %X only)	N	N	0	
A19	(Online tuning)	V/f PGV/f SLV PGV PM SLV PM PGV TRQ 0: Invalid 1: Valid	Y	Y	0	
A20	(No-load current)	V/f PGV/f SLV PGV PM SLV PM PGV TRQ 0.00 to 2000 A	N	Y1Y2	*1 *6	
A21	(%R1)	0.00 to 50.00 %	Y	Y1Y2	*1 *6	
A22	(%X)	0.00 to 50.00 %	Y	Y1Y2	*1 *6	
A23	(Slip compensation gain for driving)	V/f PGV/f SLV PGV PM SLV PM PGV TRQ 0.0 to 200.0 %	Y*	Y	100.0	
A24	(Slip compensation response time)	V/f PGV/f SLV PGV PM SLV PM PGV TRQ 0.01 to 10.00 s	Y	Y1Y2	0.12	

Function code	Name	Control method and Data setting range	Change when running	Data copying	Factory default	Related page
A25	(Slip compensation gain for braking)	V/f PGV/f SLV PGV PM SLV PM PGV TRQ 0.0 to 200.0 %	Y*	Y	100.0	
A26	(Rated slip frequency)	V/f PGV/f SLV PGV PM SLV PM PGV TRQ 0.00 to 15.00 Hz	N	Y1Y2	*1 *6	
A27	(Iron loss factor 1)	V/f PGV/f SLV PGV PM SLV PM PGV TRQ 0.00 to 20.00 %	Y	Y1Y2	*6	
A28	(Iron loss factor 2)	0.00 to 20.00 %	Y	Y1Y2	0.00	
A29	(Iron loss factor 3)	0.00 to 20.00 %	Y	Y1Y2	0.00	
A30	(Magnetic saturation factor 1)	V/f PGV/f SLV PGV PM SLV PM PGV TRQ 0.0 to 300.0 %	Y	Y1Y2	*6	
A31	(Magnetic saturation factor 2)	0.0 to 300.0 %	Y	Y1Y2	*6	
A32	(Magnetic saturation factor 3)	0.0 to 300.0 %	Y	Y1Y2	*6	
A33	(Magnetic saturation factor 4)	0.0 to 300.0 %	Y	Y1Y2	*6	
A34	(Magnetic saturation factor 5)	0.0 to 300.0 %	Y	Y1Y2	*6	
A35	(Magnetic saturation expansion coefficient a)	0.0 to 300.0 %	Y	Y1Y2	*6	
A36	(Magnetic saturation expansion coefficient b)	0.0 to 300.0 %	Y	Y1Y2	*6	
A37	(Magnetic saturation expansion coefficient c)	0.0 to 300.0 %	Y	Y1Y2	*6	
A38	Load inertia 2	V/f PGV/f SLV PGV PM SLV PM PGV TRQ 0.00 to 99.99 s	Y	Y1Y2	0.000	
A39	Motor 2 selection	V/f PGV/f SLV PGV PM SLV PM PGV TRQ 0: Motor characteristics 0 (Fuji standard IM, 8-series) 1: Motor characteristics 1 (HP rating IMs) 2: Motor characteristics 2 (Fuji dedicated motors for vector control) 3: Motor characteristics 3 (Refer to the description of function code P99 when using Fuji standard IM, 6-series) 4: Other IMs 5: Motor characteristics 5 (Fuji premium efficiency motors)	N	Y1Y2	*1	
A40	Slip compensation 2 (Operating conditions selection)	V/f PGV/f SLV PGV PM SLV PM PGV TRQ 0: Enable during acceleration/deceleration, enable at base frequency or higher 1: Disable during acceleration/deceleration, enable at base frequency or higher 2: Enable during acceleration/deceleration, disable at base frequency or higher 3: Disable during acceleration/deceleration, disable at base frequency or higher	N	Y	0	
A41	Output current fluctuation damping gain for motor 2	V/f PGV/f SLV PGV PM SLV PM PGV TRQ 0.00 to 1.00	Y	Y	0.20	5-271
A42	Motor/parameter switching 2 (Operation selection)	V/f PGV/f SLV PGV PM SLV TRQ 0: Motor switching (Switching with motor 2) 1: Parameter switching (Switching with A code)	N	Y	0	5-295
A43	Speed control 2 (Speed command filter)	V/f PGV/f SLV PGV PM SLV PM PGV TRQ 0.000 to 5.000 s	Y	Y	0.020	5-430
A44	(Speed detection filter)	V/f PGV/f SLV PGV PM SLV PM PGV TRQ 0.000 to 0.100 s	Y*	Y	0.005	
A45	P (Gain)	V/f PGV/f SLV PGV PM SLV PM PGV TRQ 0.1 to 200.0 times	Y*	Y	10.0	
A46	I (Integral time)	V/f PGV/f SLV PGV PM SLV PM PGV TRQ 0.001 to 9.999 s, 999 (Cancel integral term)	Y*	Y	0.100	
A47	FF (Gain)	V/f PGV/f SLV PGV PM SLV PM PGV TRQ 0.00 to 99.99 s	Y*	Y	0.00	
A48	(Output filter)	V/f PGV/f SLV PGV PM SLV PM PGV TRQ 0.000 to 0.100 s	Y	Y	0.002	
A49	(Notch filter resonance frequency)	V/f PGV/f SLV PGV PM SLV PM PGV TRQ 1 to 500 Hz	Y	Y	200	5-433
A50	(Notch filter attenuation level)	V/f PGV/f SLV PGV PM SLV PM PGV TRQ 0 to 40 dB	Y	Y	0	
A51	Cumulative run time of motor 2	V/f PGV/f SLV PGV PM SLV PM PGV TRQ 0 to 99990 hours (Updated in 10 hour units) Change in cumulative motor run time (Reset possible)	N	N	0	5-294 ~ 5-297
A52	Startup count for motor 2	V/f PGV/f SLV PGV PM SLV PM PGV TRQ 0 to 65535 times For adjustment when carrying out replacement	Y	N	0	

Function code	Name	Control method and Data setting range	Change when running	Data copying	Factory default	Related page
A53	Motor 2 (%X correction factor 1)	V/f PGV/f SLV PGV PM SLV PM PGV TRQ 0 to 300 %	Y	Y1Y2	100	
A54	(%X correction factor 2)	0 to 300 %	Y	Y1Y2	100	
A55	(Torque current under vector control)	V/f PGV/f SLV PGV PM SLV PM PGV TRQ 0.00 to 2000 A	N	Y1Y2	*1 *6	
A56	(Induced voltage factor under vector control)	50 to 100 %	N	Y1Y2	*6	
A57	(For adjustment by manufacturer *9)	0.000 to 20.000 s	Y	Y1Y2	*6	
A58	Speed control 2 (Notch filter width)	V/f PGV/f SLV PGV PM SLV PM PGV TRQ 0 to 3 (0: Narrow to 3: Wide)	Y	Y	2	5-433
A60	Speed display coefficient 2	V/f PGV/f SLV PGV PM SLV PM PGV TRQ 0.00 to 600.00 0.00: Use E50	Y	Y	0.00	5-210
A61	Constant rate of feeding coefficient 2/ Speed display auxiliary coefficient 2	V/f PGV/f SLV PGV PM SLV PM PGV TRQ 0.000 to 9999	Y	Y	1.000	5-294 ~ 5-297
A62	Starting frequency 2 (Holding time)	V/f PGV/f SLV PGV PM SLV PM PGV TRQ 0.00 to 10.00 s	Y	Y	0.00	
A63	Stop frequency 2	V/f PGV/f SLV PGV PM SLV PM PGV TRQ 0.0 to 60.0 Hz; 999 (Based on F25 setting)	Y	Y	999	
A64	(Detection method)	V/f PGV/f SLV PGV PM SLV PM PGV TRQ 0: Actual speed/estimated speed 1: Reference speed 100: Follow setting of F38	N	Y	100	
A65	(Holding time)	V/f PGV/f SLV PGV PM SLV PM PGV TRQ 0.00 to 10.00 s	Y	Y	0.00	
A66	Motor 2 (Thermistor operation selection)	V/f PGV/f SLV PGV PM SLV PM PGV TRQ 0: Disable 1: PTC (OH4 trips and inverter stops) 2: PTC (Output signal (THM) is out, and motor continues to run) 3: NTC (OH4 trips and inverter stops) 100: G1 compatible operation	Y	Y	100	5-255
A67	(Operation level)	0.00 to 5.00 V	Y	Y	0.35	
A98	(Function selection)	0 to 255 Bit 0: Current limiter (F43, F44) (0: Disable, 1: Enable) Bit 1: Rotational direction control (H08) (0: Disable, 1: Enable) Bit 2: Non-linear V/f (H50 to H53, H65, H66) (0: Disable, 1: Enable) Bit 3: PID control (J01 to J62, H91) (0: Disable, 1: Enable) Bit 4: Brake signal (0: Disable, 1: Enable) Bit 5: Braking timer at startup (H195) (0: Disable, 1: Enable) Bit 6 to 7: Reserved	N	Y	0	5-298

*1: Depends on the setting value of H101. Refer to Chapter 4 “4.4 Destination Setting”.
*2: Factory defaults are depended on motor capacity. Refer to Table 5.2-1 Factory default settings by inverter capacity.
*3: The motor rated current is automatically set. Refer to Table 5.2-2 Motor constants (function code P03).
*6: Factory defaults are depended on motor capacity.
*9: This is a function code for adjustment by the manufacturer. Do not change.
*11: 5.0 min for FRN0003 to 0115G2S-2G/FRN0002 to 0060G2□-4G, 10.0 min for FRN0146 to 0432G2S-2G/FRN0085 to 1480G2□-4G

[8] b codes: Motor 3 Parameters (Motor 3 parameters)

Function code	Name	Control method and Data setting range	Change when running	Data copying	Factory default	Related page
b01	Maximum output frequency 3	Same as A01	N	Y	*1	5-294 ~ 5-297
b02	Base frequency 3	Same as A02	N	Y	*1	
b03	Rated voltage at base frequency 3	Same as A03	N	Y2	*1	
b04	Maximum output voltage 3	Same as A04	N	Y2		
b05	Torque boost 3	Same as A05 (% value against base frequency voltage 3)	Y	Y	*1 *2	
b06	Electronic thermal overload protection for motor 3 (Select motor characteristics)	Same as A06	Y	Y	1	
b07	(Operation level)	Same as A07	Y	Y1Y2	*1 *3	
b08	(Thermal time constant)	Same as A08	Y	Y	*11	
b09	DC braking 3 (starting frequency)	Same as A09	Y	Y	0.0	
b10	(Operation level)	Same as A10	Y	Y	0	
b11	(Braking time)	Same as A11	Y	Y	0.00	
b12	Starting frequency 3	Same as A12	Y	Y	0.5	
b13	Load selection/ Auto torque boost/ Auto energy-saving operation 3	Same as A13	N	Y	1	
b14	Drive control selection 3	Same as A14	N	Y	0	
b15	Motor 3 (No. of poles)	Same as A15	N	Y1Y2	4	
b16	(Rated capacity)	Same as A16 (Based on r39 motor 3 selection)	N	Y1Y2	*1 *6	
b17	(Rated current)	Same as A17	N	Y1Y2	*1 *6	
b18	(Auto-tuning)	Same as A18	N	N	0	
b19	(Online tuning)	Same as A19	Y	Y	0	
b20	(No-load current)	Same as A20	N	Y1Y2	*1 *6	
b21	(%R1)	Same as A21	Y	Y1Y2	*1 *6	
b22	(%X)	Same as A22	Y	Y1Y2	*1 *6	
b23	(Slip compensation gain for driving)	Same as A23	Y*	Y	100.0	
b24	(Slip compensation response time)	Same as A24	Y	Y1Y2	0.12	
b25	(Slip compensation gain for braking)	Same as A25	Y*	Y	100.0	
b26	(Rated slip frequency)	Same as A26	N	Y1Y2	*1 *6	
b27	(Iron loss factor 1)	Same as A27	Y	Y1Y2	*6	
b28	(Iron loss factor 2)	Same as A28	Y	Y1Y2	0.00	
b29	(Iron loss factor 3)	Same as A29	Y	Y1Y2	0.00	
b30	(Magnetic saturation factor 1)	Same as A30	Y	Y1Y2	*6	
b31	(Magnetic saturation factor 2)	Same as A31	Y	Y1Y2	*6	
b32	(Magnetic saturation factor 3)	Same as A32	Y	Y1Y2	*6	
b33	(Magnetic saturation factor 4)	Same as A33	Y	Y1Y2	*6	
b34	(Magnetic saturation factor 5)	Same as A34	Y	Y1Y2	*6	
b35	(Magnetic saturation expansion coefficient a)	Same as A35	Y	Y1Y2	*6	
b36	(Magnetic saturation expansion coefficient b)	Same as A36	Y	Y1Y2	*6	
b37	(Magnetic saturation expansion coefficient c)	Same as A37	Y	Y1Y2	*6	
b38	Load inertia 3	Same as A38	Y	Y1Y2	0.000	
b39	Motor 3 selection	Same as A39	N	Y1Y2	*1	
b40	Slip compensation 3 (Operating conditions selection)	Same as A40	N	Y	0	
b41	Output current fluctuation damping gain for motor 3	Same as A41	Y	Y	0.20	5-271
b42	Motor/parameter switching 3 (Operation selection)	V/f PGV/f SLV PGV PMSLV PMPGV TRQ 0: Motor switching (Switching with motor 3) 1: Parameter switching (Switching with b code)	N	Y	0	5-295

Function code	Name	Control method and Data setting range	Change when running	Data copying	Factory default	Related page
b43	Speed control 3 (Speed command filter)	Same as A43	Y	Y	0.020	5-430
b44	(Speed detection filter)	Same as A44	Y*	Y	0.005	
b45	(P gain)	Same as A45	Y*	Y	10.0	
b46	(I integral time)	Same as A46	Y*	Y	0.100	
b47	FF (Gain)	Same as A47	Y*	Y	0.00	
b48	(Output filter)	Same as A48	Y	Y	0.002	
b49	(Notch filter resonance frequency)	Same as A49	Y	Y	200	5-433
b50	(Notch filter attenuation level)	Same as A50	Y	Y	0	
b51	Cumulative run time of motor 3	Same as A51	N	N	0	5-294 ~ 5-297
b52	Startup count for motor 3	Same as A52	Y	N	0	
b53	Motor 3 (%X correction factor 1)	Same as A53	Y	Y1Y2	100	
b54	(%X correction factor 2)	Same as A54	Y	Y1Y2	100	
b55	(Torque current under vector control)	Same as A55	N	Y1Y2	*1 *6	
b56	(Induced voltage factor under vector control)	Same as A56	N	Y1Y2	*6	
b57	(For adjustment by manufacturer *9)	Same as A57	Y	Y1Y2	*6	
b58	Speed control 3 (Notch filter width)	Same as A58	Y	Y	2	5-433
b60	Speed display coefficient 3	Same as A60	Y	Y	0.00	5-210
b61	Constant rate of feeding coefficient 3/ Speed display auxiliary coefficient 3	Same as A61	Y	Y	1.000	5-294 ~ 5-297
b62	Starting frequency 3 (Holding time)	Same as A62	Y	Y	0.00	
b63	Stop frequency 3	Same as A63	Y	Y	999	
b64	(Detection method)	Same as A64	N	Y	100	
b65	(Holding time)	Same as A65	Y	Y	0.00	
b66	Motor 3 (Thermistor operation selection)	Same as A66	Y	Y	100	5-255
b67	(Operation level)	Same as A67	Y	Y	0.35	
b98	(Function selection)	Same as A98	N	Y	0	5-298

*1: Depends on the setting value of H101. Refer to Chapter 4 “4.4 Destination Setting”.
*2: Factory defaults are depended on motor capacity. Refer to Table 5.2-1 Factory default settings by inverter capacity.
*3: The motor rated current is automatically set. Refer to Table 5.2-2 Motor constants (function code P03).
*6: Factory defaults are depended on motor capacity.
*9: This is a function code for adjustment by the manufacturer. Do not change.
*11: 5.0 min for FRN0003 to 0115G2S-2G/FRN0002 to 0060G2□-4G, 10.0 min for FRN0146 to 0432G2S-2G/FRN0085 to 1480G2□-4G

[9] r codes: Motor 4 Parameters (Motor 4 parameters)

Function code	Name	Control method and Data setting range	Change when running	Data copying	Factory default	Related page
r01	Maximum output frequency 4	Same as A01	N	Y	*1	5-294 ~ 5-297
r02	Base frequency 4	Same as A02	N	Y	*1	
r03	Rated voltage at base frequency 4	Same as A03	N	Y2	*1	
r04	Maximum output voltage 4	Same as A04	N	Y2		
r05	Torque boost 4	Same as A05 (% value against base frequency voltage 4)	Y	Y	*1 *2	
r06	Electronic thermal overload protection for motor 4 (Select motor characteristics)	Same as A06	Y	Y	1	
r07	(Operation level)	Same as A07	Y	Y1Y2	*1 *3	
r08	(Thermal time constant)	Same as A08	Y	Y	*11	
r09	DC braking 4 (starting frequency)	Same as A09	Y	Y	0.0	
r10	(Operation level)	Same as A10	Y	Y	0	
r11	(Braking time)	Same as A11	Y	Y	0.00	
r12	Starting frequency 4	Same as A12	Y	Y	0.5	
r13	Load selection/ Auto torque boost/ Auto energy-saving operation 4	Same as A13	N	Y	1	
r14	Drive control selection 4	Same as A14	N	Y	0	
r15	Motor 4 (No. of poles)	Same as A15	N	Y1Y2	4	
r16	(Rated capacity)	Same as A16 (Based on r39 motor 4 selection)	N	Y1Y2	*1 *6	
r17	(Rated current)	Same as A17	N	Y1Y2	*1 *6	
r18	(Auto-tuning)	Same as A18	N	N	0	
r19	(Online tuning)	Same as A19	Y	Y	0	
r20	(No-load current)	Same as A20	N	Y1Y2	*1 *6	
r21	(%R1)	Same as A21	Y	Y1Y2	*1 *6	
r22	(%X)	Same as A22	Y	Y1Y2	*1 *6	
r23	(Slip compensation gain for driving)	Same as A23	Y*	Y	100.0	
r24	(Slip compensation response time)	Same as A24	Y	Y1Y2	0.12	
r25	(Slip compensation gain for braking)	Same as A25	Y*	Y	100.0	
r26	(Rated slip frequency)	Same as A26	N	Y1Y2	*1 *6	
r27	(Iron loss factor 1)	Same as A27	Y	Y1Y2	*6	
r28	(Iron loss factor 2)	Same as A28	Y	Y1Y2	0.00	
r29	(Iron loss factor 3)	Same as A29	Y	Y1Y2	0.00	
r30	(Magnetic saturation factor 1)	Same as A30	Y	Y1Y2	*6	
r31	(Magnetic saturation factor 2)	Same as A31	Y	Y1Y2	*6	
r32	(Magnetic saturation factor 3)	Same as A32	Y	Y1Y2	*6	
r33	(Magnetic saturation factor 4)	Same as A33	Y	Y1Y2	*6	
r34	(Magnetic saturation factor 5)	Same as A34	Y	Y1Y2	*6	
r35	(Magnetic saturation expansion coefficient a)	Same as A35	Y	Y1Y2	*6	
r36	(Magnetic saturation expansion coefficient b)	Same as A36	Y	Y1Y2	*6	
r37	(Magnetic saturation expansion coefficient c)	Same as A37	Y	Y1Y2	*6	
r38	Load inertia 4	Same as A38	Y	Y1Y2	0.000	
r39	Motor 4 selection	Same as A39	N	Y1Y2	*1	
r40	Slip compensation 4 (Operating conditions selection)	Same as A40	N	Y	0	
r41	Output current fluctuation damping gain for motor 4	Same as A41	Y	Y	0.20	5-271
r42	Motor/parameter switching 4 (Operation selection)	V/f PGV/f SLV PGV PM SLV PM PGV TRQ 0: Motor switching (Switching with motor 4) 1: Parameter switching (Switching with r code)	N	Y	0	5-295

Function code	Name	Control method and Data setting range	Change when running	Data copying	Factory default	Related page
r43	Speed control 4 (Speed command filter)	Same as A43	Y	Y	0.020	5-430
r44	(Speed detection filter)	Same as A44	Y*	Y	0.005	
r45	(P gain)	Same as A45	Y*	Y	10.0	
r46	(I integral time)	Same as A46	Y*	Y	0.100	
r47	FF (Gain)	Same as A47	Y*	Y	0.00	
r48	(Output filter)	Same as A48	Y	Y	0.002	
r49	(Notch filter resonance frequency)	Same as A49	Y	Y	200	5-433
r50	(Notch filter attenuation level)	Same as A50	Y	Y	0	
r51	Cumulative run time of motor 4	Same as A51	N	N	0	5-294 ~ 5-297
r52	Startup count for motor 4	Same as A52	Y	N	0	
r53	Motor 4 (%X correction factor 1)	Same as A53	Y	Y1Y2	100	
r54	(%X correction factor 2)	Same as A54	Y	Y1Y2	100	
r55	(Torque current under vector control)	Same as A55	N	Y1Y2	*1 *6	
r56	(Induced voltage factor under vector control)	Same as A56	N	Y1Y2	*6	
r57	(For adjustment by manufacturer *9)	Same as A57	Y	Y1Y2	*6	
r58	Speed control 4 (Notch filter width)	Same as A58	Y	Y	2	5-433
r60	Speed display coefficient 4	Same as A60	Y	Y	0.00	5-210
r61	Constant rate of feeding coefficient 4/ Speed display auxiliary coefficient 4	Same as A61	Y	Y	1.000	5-294 ~ 5-297
r62	Starting frequency 4 (Holding time)	Same as A62	Y	Y	0.00	
r63	Stop frequency 4	Same as A63	Y	Y	999	
r64	(Detection method)	Same as A64	N	Y	100	
r65	(Holding time)	Same as A65	Y	Y	0.00	
r66	Motor 4 (Thermistor operation selection)	Same as A66	Y	Y	100	5-255
r67	(Operation level)	Same as A67	Y	Y	0.35	
r98	(Function selection)	Same as A98	N	Y	0	5-298

*1: Depends on the setting value of H101. Refer to Chapter 4 “4.4 Destination Setting”.
*2: Factory defaults are depended on motor capacity. Refer to Table 5.2-1 Factory default settings by inverter capacity.
*3: The motor rated current is automatically set. Refer to Table 5.2-2 Motor constants (function code P03).
*6: Factory defaults are depended on motor capacity.
*9: This is a function code for adjustment by the manufacturer. Do not change.
*11: 5.0 min for FRN0003 to 0115G2S-2G/FRN0002 to 0060G2□-4G, 10.0 min for FRN0146 to 0432G2S-2G/FRN0085 to 1480G2□-4G

[10] J codes: Application Functions (Application function)

Function code	Name	Control method and Data setting range	Change when running	Data copying	Factory default	Related page
J01	PID control (Mode selection)	V/f PGV/f SLV PGV PM SLV PM PGV TRQ 0: Disable 1: Process (normal operation) 2: Process (inverse operation) 3: Speed control (Dancer)	N	Y	0	5-300
J02	(Remote command)	0: Keypad operation (▲/▼ keys) 1: PID command 1 (Analog input: Terminals [12], [C1], [V2] and [V3]) 3: UP/DOWN 4: Communication	N	Y	0	5-302
J03	P (Gain)	0.000 to 30.000 times	Y	Y	0.100	5-307
J04	I (Integral time)	0.0 to 3600.0 s	Y	Y	0.0	
J05	D (Differential time)	0.00 to 600.00 s	Y	Y	0.00	
J06	(Feedback filter)	0.0 to 900.0 s *18	Y	Y	0.5	
J08	(Pressurization frequency)	0.0 to 599.0 Hz	Y	Y	0.0	5-311
J09	(Pressurization time)	0 to 60 s	Y	Y	0	
J10	(Anti-reset windup)	0 to 200 %	Y	Y	200	5-313
J11	(Select Warning output)	0: Warning caused by process command value 1: Warning caused by process command value with hold 2: Warning caused by process command value with latch 3: Warning caused by process command value with hold and latch 4: Warning caused by PID error value 5: Warning caused by PID error value with hold 6: Warning caused by PID error value with latch 7: Warning caused by PID error value with hold and latch	Y	Y	0	
J12	(Upper limit of warning (AH))	-100 % to 100 %	Y	Y	100	
J13	(Lower limit of warning (AL))	-100 % to 100 %	Y	Y	0	
J15	(Sleep frequency)	0.0 (Disable), 1.0 to 599.0 Hz	Y	Y	0.0	5-314
J16	(Sleep timer)	0 to 60 s	Y	Y	30	
J17	(Wakeup frequency)	0.0 to 599.0 Hz	Y	Y	0.0	
J18	(Upper limit of PID process output)	-150 % to 150 %, 999 (Based on F15)	Y	Y	999	5-315
J19	(Lower limit of PID process output)	-150 % to 150 %, 999 (Based on F16)	Y	Y	999	
J21	Condensation prevention (Duty)	V/f PGV/f SLV PGV PM SLV PM PGV TRQ 1 to 50 %	Y	Y	1	
J22	Switch to commercial power supply sequence	V/f PGV/f SLV PGV PM SLV PM PGV TRQ 0: Standard sequence 1: Inverter automatic switching sequence	N	Y	0	
J23	PID control (Wakeup level of PID error feedback deviation)	V/f PGV/f SLV PGV PM SLV PM PGV TRQ 0.0 to 100.0 %	Y	Y	0.0	
J24	(Wakeup timer)	0 to 3600 s	Y	Y	0	
J57	(Dancer position set point)	-100 to 0 to 100 %	Y	Y	0	5-316
J58	(Detection width of dancer position error)	0: Disable switching PID constant 1 to 100 %: Manually set value	Y	Y	0	5-317
J59	P (Gain) 2	0.000 to 30.000 times	Y	Y	0.100	
J60	I (Integral time) 2	0.0 to 3600.0 s	Y	Y	0.0	
J61	D (Differential time) 2	0.00 to 600.00 s	Y	Y	0.00	
J62	(PID control block selection)	0 to 3 Bit 0: Select polarity compensation for PID output/error 0=Plus (Addition); 1=Minus (Subtraction) Bit 1: Select compensation factor for PID output 0=Ratio (relative to the main setting) 1=Speed command (relative to maximum output frequency)	N	Y	0	
J63	Overload stop (Item selection)	V/f PGV/f SLV PGV PM SLV PM PGV TRQ 0: Torque, 1: Current	Y	Y	0	5-318
J64	(Detection level)	20 to 200 %	Y	Y	100	
J65	(Operation selection)	0: Disable 1: Decelerate to stop 2: Coast to stop V/f PGV/f SLV PGV PM SLV PM PGV TRQ 3: Contacting the stopper	N	Y	0	
J66	(Operation mode)	V/f PGV/f SLV PGV PM SLV PM PGV TRQ 0: During constant speed running and deceleration 1: During constant speed running 2: Anytime	Y	Y	0	
J67	(Timer)	0.00 to 600.00 s	Y	Y	0.00	

Function code	Name	Control method and Data setting range	Change when running	Data copying	Factory default	Related page
J68	Brake control signal (Brake-release current)	V/f PGV/f SLV PGV PM SLV PM PGV TRQ 0.00 to 300.00 %	Y	Y	100.00	5-320
J69	(Brake-release frequency/speed)	0.0 to 25.0 Hz	Y	Y	1.0	
J70	(Brake-release timer)	0.000 to 5.000 s	Y	Y	1.000	
J71	(Brake-applied frequency/speed)	0.0 to 25.0 Hz	Y	Y	1.0	
J72	(Brake-applied timer)	0.000 to 5.000 s	Y	Y	1.000	
J90	Overload stop (Stopper contact) (Torque limiting P (Gain))	V/f PGV/f SLV PGV PM SLV PM PGV TRQ 0.000 to 2.000, 999	Y	Y	999	5-318 5-324
J91	(Torque limiting I (Integral time))	0.001 to 9.999s, 999	Y	Y	999	
J92	(Current command level)	50.0 to 150.0 %	Y	Y	100.0	
J95	Brake control signal (Brake-release torque)	V/f PGV/f SLV PGV PM SLV PM PGV TRQ 0.00 to 300.00 %	Y	Y	100.00	
J96	(Operation selection)	0 to 127 Bit 0: Speed detection / Speed command selection (0: Speed detection value, 1: Speed command value) Bit 1: Reserved Bit 2: Not used Bit 3: Not used Bit 4: Brake-apply condition (0: Regardless of run command status (ON or OFF), 1: Only when run command is OFF) Bit 5: Not used Bit 6: Stop condition at position control (0 : Break signal OFF ; 1 : Break signal ON)	Y	Y	0	5-320
J97	Servo lock (Gain)	V/f PGV/f SLV PGV PM SLV PM PGV TRQ 0.000 to 9.999 times	Y	Y	0.010	5-324
J98	(Completion timer)	0.000 to 1.000 s	Y	Y	0.100	
J99	(Completion range)	0 to 9999 pulses	Y	Y	10	

*18: When speed control (dancer) is selected (J01 ≠ 3 → = 3), the J06 setting value automatically changes to 0.0 s. To specify the filter time constant in detail, apply filter time constants for analog input (C33, C38 and C43) with J06 = 0.0. When speed control (dancer) is not selected (J01 = 3 → ≠ 3), the J06 setting value automatically changes to 0.5 s. Set J06 after setting J01.

[11] J1 codes: Application Functions (Application function)

The control methods V/f PGV/f SLV PGV PMSLV PMPGV TRQ in J1 codes are valid.

Function code	Name	Control method and Data setting range	Change when running	Data copying	Factory default	Related page
J101	PID Control1 *101 (Mode selection)	0: Disable 1: Enable (Process control normal operation) 2: Enable (Process control inverse operation)	N	Y	0	5-327
J102	(Command selection)	0: UP or DOWN keys on keypad 1: PID command 1(Analog input terminals [12], [C1] and [V2]) 3: UP/DOWN 4: Command via communications link (Use function code S13)	N	Y	0	5-302 5-328
J103	(Feedback selection)	1: PID control 1 feedback value 10: Addition (PID control 1 feedback value + PID control 2 feedback value) 11: Difference (PID control 1 feedback value - PID control 2 feedback value) 12: Average (PID control 1 feedback value, PID control 2 feedback value) 13: Maximum (PID control 1 feedback value, PID control 2 feedback value) 14: Minimum (PID control 1 feedback value, PID control 2 feedback value)	N	Y	1	5-330
J104	(Deviation selection)	0: (J102) - (J103) 1: Selection of maximum (selection of maximum for PID control 1 and 2 deviation) 2: Selection of minimum (selection of minimum for PID control 1 and 2 deviation)	N	Y	0	5-331
J105	PID control (Display unit)	0: Inherit (PID Control 1 feedback unit) 1: No unit 2: % 4: r/min 7: kW 8: HP 10: mm/s 11: mm/m 12: mm/h 13: m/s 14: m/min 15: m/h 16: FPS 17: FPM 18: FPH 19: SPM *100 [Flow] 20: m^3/s 21: m^3/min 22: m^3/h 23: L/s 24: L/min 25: L/h 26: GPS 27: GPM 28: GPH 29: CFS 30: CFM 31: CFH 32: kg/s 33: kg/m 34: kg/h 35: lb/s 36: lb/m 37: lb/h 38: AF/Y [Pressure] 40: Pa 41: kPa 42: MPa 43: mbar 44: bar 45: mmHg 46: PSI (Pounds per square inch absolute) 47: mWG 48 inWG 49: inHg 50: WC 51: FT WG 52: ATM *100 [Temperature] 60: K 61: °C 62: °F [Distance] 65: N·m 66: lb ft 70: mm 71: cm 72: m 73: km 74: in	N	Y	0	5-332

Function code	Name	Control method and Data setting range	Change when running	Data copying	Factory default	Related page
		75: Ft 76: Yd 77: mi [Concentration] 80: ppm [Other amounts] 90: m3 91: L 92: GAL 93: OZ *100				
J106	PID control (Maximum scale)	-999.0 to 0.00 to 9990.0	N	Y	100.00	5-333
J107	(minimum scale)	-999.0 to 0.00 to 9990.0	N	Y	0.00	
J108	(Auto-tuning)	0: Disable 1: For short time response 2: For long time response * If tuning ends abnormally, the following value is set for J108. 100: Tuning cancel 101: Mode unmatch 102: MV insufficient 103: MV excessive 104: MV change 105: PV excessive or insufficient 106: PV unstable 107: Other	Y	N	0	5-334
J109	(Operation frequency when tuning)	10 to 100 %			10	
J110	PID Control1 *101 P (gain)	0.000 to 30.000 times	Y	Y	0.100	5-307 5-336
J111	I (Integral time)	0.0 to 3600.0 s	Y	Y	0.0	
J112	D (Differential time)	0.00 to 600.00 s	Y	Y	0.00	
J113	(Feedback filter)	0.0 to 900.0 s	Y	Y	0.5	
J114	(Anti-reset wind-up)	0.00(OFF): Disable, 0.01 to 9990 *103	Y	Y	0.00	5-313 5-336
J118	(Upper limit of PID process output)	0.0 to 599.0 Hz, 999(Inherit): Depends on F15	Y	Y	999	5-315 5-336
J119	(Lower limit of PID process output)	0.0 to 599.0 Hz, 999(Inherit): Depends on F16	Y	Y	999	
J121	(Alarm output selection)	0: PV Absolute-value alarm 1: PV Absolute-value alarm (with Hold) 2: PV Absolute-value alarm (with Latch) 3: PV Absolute-value alarm (with Hold and Latch) 4: PV Deviation alarm 5: PV Deviation alarm (with Hold) 6: PV Deviation alarm (with Latch) 7: PV Deviation alarm (with Hold and Latch)	Y	Y	0	
J122	(Upper level alarm (AH))	-999 to 0.00 to 9990, OFF *103	Y	Y	OFF	
J124	(Lower level alarm (AL))	-999 to 0.00 to 9990, OFF *103	Y	Y	OFF	
J127	(Feedback failure detection (Mode selection))	0: Disable (Turns ON output signals “PV1-OFF” and continues operation.) 1: Enable (Free run stop (PU1 trip)) 2: Enable (Deceleration and stop (PU1 trip)) 3: Enable (Continuation of operation at the maximum frequency (upper limit frequency)) 4: Enable (Continuation of operation at the minimum frequency (lower limit frequency)) 5: Enable (Continuation of operation at the frequency used when failure is detected.) 6: Enable (Shift to PID control 2 (PID control 1 is restored when failure is recovered from.))	Y	Y	0	5-337
J128	(Feedback failure continuation duration)	0 to 3600 s 999: Mode selection: continuation of operation specified with J127. PU1 trip after stop (output shutoff).	Y	Y	999	
J129	(Feedback failure upper-limit)	-999 to 0.00 to 9990, AUTO: equivalent to 105% *103	Y	Y	AUTO	
J130	(Feedback failure lower-limit)	-999 to 0.00 to 9990, AUTO: equivalent to -5% *103	Y	Y	AUTO	
J131	(Feedback failure detection time)	0.0 to 300.0 s	Y	Y	0.1	
J136	(Multistep command 1)	-999.0 to 0.00 to 9990.0	Y	Y	0.00	5-338
J137	(Multistep command 2)	-999.0 to 0.00 to 9990.0	Y	Y	0.00	
J138	(Multistep command 3)	-999.0 to 0.00 to 9990.0	Y	Y	0.00	

Function code	Name	Control method and Data setting range	Change when running	Data copying	Factory default	Related page
J143	Boost Function *101 (Mode selection)	0: Disable (disabled at the time of initiation) 1: Enable (enabled at the time of initiation plus only at the time of PID control) 2: Enable (always enabled at the time of initiation) 3: Enable (only first initiation with power ON plus only at the time of PID control) 4: Enable (only at the time of first initiation with power ON)	Y	Y	0	5-339
J144	(Operation frequncy)	0.0(Inherit): Depends on maximaum output frequency 0.1 to 599.0 Hz	Y	Y	0.0	
J145	(Acceleration time)	0.00(Inherit): The currently effective acceleration time is followed 0.01 to 6000 s *Acceleration time from 0 Hz to Fmax should be specified. *In the case of J145≠0.00, the acceleration/deceleration time selection function is disabled.	Y	Y	0.00	
J146	(Operation time)	0.0 to 3600.0 s * Specify the time including acceleration time. * 0.0 Time period while the boost command “BST” is ON (When “BST” is not used, this is used as the time until the operation frequency is reached.)	Y	Y	0.0	
J147	(Cancel PV level)	-999 to 0.00 to 9990, OFF *103	Y	Y	OFF	
J149	Slow Flowrate Stop Function *101 (Mode selection)	0: Disable (display of OFF) 1: Manual operation (stop judgment MV) 2: Manual operation (stop judgment PV) 11: Auto operation 1 (stop judgment MV) 12: Auto operation 1 (stop judgment PV) 21: Auto operation 2 (stop judgment MV) 22: Auto operation 2 (stop judgment PV)	N	Y	0	5-342
J150	(Operation level)	0.00 to 9990 / 0.00 to 599.0 Hz, AUTO *103	Y	Y	AUTO	
J151	(Elapsed time)	0 to 60 s	Y	Y	0	
J152	(Auto-operation frequency lower-limit)	0.0 to 599.0 Hz	Y	Y	0.0	
J153	(Pressurization starting frequency)	0.0 to 599.0 Hz	Y	Y	0.0	
J154	(Pressurizing time)	0 to 60 s	Y	Y	0	
J156	(Initiation inhibition time)	0 to 3600 s	Y	Y	0	
J157	(Cancel frequency)	0.0 to 599.0 Hz, OFF	Y	Y	0.0	
J158	(Cancel deviation level1)	0.00(OFF): Disable, 0.01 to 9990 *103	Y	Y	0.00	
J159	(Cancel delay timer)	0 to 3600 s	Y	Y	0	
J160	(Cancel deviation level2)	0.00(OFF): Disable, 0.01 to 9990 *103	Y	Y	0.00	
J163	Flow Sensor *101 (Input selection)	0: Inherit 1: PV1 20: m3/s 21: m3/min 22: m3/h 23: L/s 24: L/min 25: L/h * Data 0 is followed analog input selected by E61, E62 and E63. * Data 20 or larger is to be used for connection of customizable logic.	N	Y	0	5-347
J164	(ON level)	0.00 to 9990, OFF *103	Y	Y	OFF	
J165	(OFF level)	0.00 to 9990, OFF *103	Y	Y	OFF	
J166	(Input filter)	0.00 to 5.00 s	Y	Y	0.20	
J168	Control of Maximum Starts Per Hour *101 (Input selection)	0: Disable 1: Alarm (rOC) 2: Warning output	Y	Y	0	5-348
J169	(Number of detections)	1 to 10	Y	Y	1	
J176	Dry Pump Protection *101 (Input selection)	0: Disable 1: Alarm (Pdr) 2: Warning output	Y	Y	0	5-349
J177	(Detection current)	0.00: Disable, current value of 1 to 150% of inverter rated current set with A unit	Y	Y1 Y2	Y	
J178	(Deviation)	0.00(OFF): Disable, 0.01 to 9990 *103	Y	Y	0.00	
J179	(Flow sensor)	0: Disable 1: Enable	Y	Y	0	
J180	(Detection timer)	0 to 600 s	Y	Y	0	
J182	End of Protection *101 (Input selection)	0: Disable 1: Alarm (PoL) 2: Warning output	Y	Y	0	5-351
J183	(Detection current)	0.00: Disable, current value of 1 to 150% of inverter rated current set with A unit	Y	Y1 Y2	Y	
J184	(Deviation)	0.00(OFF): Disable, 0.01 to 9990 *103	Y	Y	0.00	
J185	(Flow sensor)	0: Disable 1: Enable	Y	Y	0	
J186	(Detection timer)	0 to 600 s	Y	Y	0	
J188	Filter Clogging Prevention/ Anti Jam Func. *101 (Input selection)	0: Disable 1: Enable (Anti jam protection, inverter stop with rLo trip) 2: Enable (Filter clogging trouble, inverter stop with FoL trip) 3: Enable (While warning (filter clogging trouble) is output, operation is continued.)	Y	Y	0	5-353

Function code	Name	Control method and Data setting range	Change when running	Data copying	Factory default	Related page
J189	Filter Clogging Prevention *101 (Reverse operation cycle time)	0(OFF): Disable, 1 to 10000 h	Y	Y	720	5-353
J190	(Load resistance current)	0.00: Disable, current value of 1 to 150% of inverter rated current set with A unit	Y	Y	0.00	
J191	(Load resistance PV signal)	-999 to 0.00 to 9990, OFF *103	Y	Y	OFF	
J192	(Load resistance detection timer)	0 to 600 s	Y	Y	0	
J193	Filter Clogging Prevention /Anti Jam Func. *101 (Reverse operation frequency)	0.0 to 599.0 Hz	Y	Y1 Y2	5.0	
J194	(Reverse operation time)	0 to 600 s	Y	Y	30	
J195	(Number of reverse runs)	1 to 10	Y	Y	3	
J198	Wet-bulb temperature presumption control *101 (Frequency reduction rate)	0.00(OFF): Disable 0.01 to 599.00 Hz/min	Y	Y	0.00	5-357
J199	(Detection width)	0.00(OFF): Disable, 0.01 to 9990 *103	Y	Y	0.00	

*100: Supported with ROM0300 or later.
*101: Supported with ROM0500 or later.
*103: The upper and lower level values are restricted by the maximum and minimum scales.

[12] J2 codes: Application Functions (Application function)

J2 code Supported with ROM0500 or later.

The control methods V/f PGV/f SLV PGV PMSLV PMPGV TRQ in these codes are valid.

Function code	Name	Control method and Data setting range	Change when running	Data copying	Factory default	Related page
J201	PID Control 2 (Mode selection)	0: Disable 1: Enable (Process control normal operation) 2: Enable (Process control inverse operation)	N	Y	0	5-358
J202	(Command selection)	0: ▲ or ▼ keys on keypad 1: PID command 1(Analog input terminals [12], [C1] and [V2]) 2: PID command 2 (Analog input Terminals [12], [C1] and [V2]) 3: UP/DOWN 4: Command via communications link (Use function code S13) 101: Command under PID control 1 (J102)	N	Y	0	
J203	(Feedback selection)	1: PID control 1 feedback value 2: PID control 2 feedback value 13: Maximum (PID control 1 feedback value, PID control 2 feedback value)	N	Y	2	
J205	(Display unit)	Same as J105	N	Y	0	
J206	(Maximum scale)	Same as J106	N	Y	100.00	
J207	(Minimum scale)	Same as J107	N	Y	0.00	
J208	(Auto tuning)	Same as J108	Y	N	0	
J209	(Tuninng MV)	Same as J109	Y	Y	10	
J210	P (Gain)	Same as J110	Y	Y	0.100	
J211	I (Integral time)	Same as J111	Y	Y	0.0	
J212	D (Differential time)	Same as J112	Y	Y	0.00	
J213	(Feedback filter)	Same as J113	Y	Y	0.5	
J214	(Anti-reset wind-up)	Same as J114 *103	Y	Y	0.00	
J218	(Upper limit of PID process output)	Same as J118	Y	Y	999	
J219	(Lower limit of PID process output)	Same as J119	Y	Y	999	
J221	(Alarm output selection)	0: Absolute-value alarm 1: Absolute-value alarm (with Hold) 2: Absolute-value alarm (with Latch) 3: Absolute-value alarm (with Hold and Latch) 4: Deviation alarm 5: Deviation alarm (with Hold) 6: Deviation alarm (with Latch) 7: Deviation alarm (with Hold and Latch) 50: Absolute-value alarm (Cancel PID control)	Y	Y	0	5-359
J222	(Upper level alarm (AH))	Same as J122 *103	Y	Y	OFF	
J223	(Upper level alarm detection hysteresis width)	0.00 to 9990 *103	Y	Y	0.00	
J224	(Lower level alarm (AL))	Same as J124 *103	Y	Y	OFF	
J225	(Upper level alarm detection hysteresis width)	0.00 to 9990 *103	Y	Y	0.00	
J227	(Feedback failure detection (Mode selection))	0: Disable (Turns ON output signals “PV2-OFF” and continues operation.) 1: Enable (Free run stop (PUC trip)) 2: Enable (Deceleration and stop (PUC trip)) 3: Enable (Continuation of operation at the maximum frequency (upper limit frequency)) 4: Enable (Continuation of operation at the minimum frequency (lower limit frequency)) 5: Enable (Continuation of operation at the frequency used when failure is detected.)	Y	Y	0	
J228	(Feedback failure continuation duration)	0 to 3600 999: Mode selection: continuation of operation specified with J227. PUC trip after stop (output shutoff).	Y	Y	999	
J229	(Feedback failure upper-limit)	Same as J129 *103	Y	Y	AUTO	
J230	(Feedback failure lower-limit)	Same as J130 *103	Y	Y	AUTO	
J231	(Feedback failure detection time)	Same as J131	Y	Y	0.1	
J247	Boost Function 2 (Cancel PV level)	Same as J147	Y	Y	999	
J249	Slow Flowrate Stop Function 2 (Mode selection)	0: Disable (display of OFF) 1: Manual operation (stop judgment: MV) 2: Manual operation (stop judgment: PV)	N	Y	0	
J250	(Operation level)	Same as J150 *103	Y	Y	999	
J251	(Elapsed time)	Same as J151	Y	Y	0	
J256	(Initiation inhibition time)	Same as J156	Y	Y	0	
J257	(Cancel frequency)	Same as J157	Y	Y	0.0	
J258	(Cancel deviation level 1)	Same as J158 *103	Y	Y	0.00	
J259	(Cancel delay timer)	Same as J159	Y	Y	0	
J260	(Cancel deviation level 2)	Same as J160 *103	Y	Y	0.00	
J276	Dry Pump Protection 2 (Input selection)	Same as J176	Y	Y	0	
J277	(Detection current)	Same as J177	Y	Y1 Y2	0.00	
J278	(Deviation)	Same as J178 *103	Y	Y	0.00	
J279	(Flow sensor)	Same as J179	Y	Y	0	
J280	(Detection timer)	Same as J180	Y	Y	0	

*103: The upper and lower level values are restricted by the maximum and minimum scales.

[13] J4 codes: Application Functions (Application function)

J4 code Supported with ROM0500 or later.

The control methods V/f PGV/f SLV PGV PMSLV PMPGV TRQ in these codes are valid.

Function code	Name	Control method and Data setting range	Change when running	Data copying	Factory default	Related page
J401	Pump Control Mode Selection	0: Disable 1: Enable (Inverter-driven motor fixation system / switch by PID output (MV)) 2: Enable (Inverter-driven motor floating system / switch by PID output (MV)) 3: Enable (Inverter-driven motor floating + commercial power-driven motor system / switch by PID output (MV)) 11: Enable (Inverter-driven motor fixation system / switch by output frequency) 12: Enable (Inverter-driven motor floating system / switch by output frequency) 13: Enable (Inverter-driven motor floating + commercial power-driven motor system / switch by output frequency) 52: Enable (Communications-linked inverter-driven motor floating system) 54: Enable (Communications-linked all motors simultaneous PID control system)	N	Y	0	5-382
J402	Communication Master/Slave Selection	0: Communication master inverter 1: Communication slave inverter	N	Y	1	5-384
J403	Number of Slaves	1 or 3 units * Set for a master only	N	Y	1	
J404	Master Input Permeation Selection	0000_H to $07FF_H$ bit0: [FWD] bit1: [REV] bit2: [X1] bit3: [X2] bit4: [X3] bit5: [X4] bit6: [X5] bit7: [X6] bit8: [X7] bit9: [X8] bit10: [X9] * The inverter sends the master terminal input info to the slave. * The slave stores the received data to S06 after masking.	N	Y	h.0000	
J411	Motor 1 Mode Selection	0: Disable (off at all times) 1: Enable 2: Forced drive ON (forced commercial power drive)	Y	Y	0	5-385
J412	Motor 2 Mode Selection		Y	Y	0	
J413	Motor 3 Mode Selection		Y	Y	0	
J414	Motor 4 Mode Selection		Y	Y	0	
J415	Motor 5 Mode Selection		Y	Y	0	
J416	Motor 6 Mode Selection		Y	Y	0	
J417	Motor 7 Mode Selection		Y	Y	0	
J418	Motor 8 Mode Selection		Y	Y	0	
J425	Motor Switching Procedure	0: Fixation procedure 1: Equal operating time (Cumulative run time of each motor is equalized.) 2: Fixation procedure (Switching the motor at slow flowrate stop) 3: Equal operating time (Switching the motor at slow flowrate stop.)	N	Y	0	5-386
J430	How to Stop the Motor	0: Turn all the inverter and commercial power OFF. 1: Turn the inverter only OFF, except when an alarm has occurred. 2: Turn the inverter only OFF, also when an alarm has occurred.	Y	Y	0	5-387
J435	Motor Regular Switching Mode Selection	1: Inverter-driven pumps are subject to switching. 2: Commercial power-driven pumps are subject to switching. 3: All pumps (inverter-driven pumps/commercial power-driven pumps) are subject to switching.	Y	Y	1	5-389
J436	Motor Regular Switching Time	0.0(OFF): Disable 0.1 to 720.0 h: Switching time 999(Test): Switching time fixed to three minutes	Y	Y	0.0	
J437	Motor Regular Switching Signal Output Time	0.00 to 600.00 s Signal output time	Y	Y	0.10	
J450	Motor Increase Judgment (Judgment frequency)	0 to 599 Hz 999(Inherit): Depends on J118	Y	Y	999	5-392
J451	(Duration time)	0.00 to 6000 s	Y	Y	0.00	
J452	Motor Decrease Judgment (Judgment frequency)	0 to 599 Hz 999(Inherit): Depends on J119	Y	Y	999	
J453	(Duration time)	0.00 to 6000 s	Y	Y	0.00	
J454	Contactor Restart Time when Switching the Motor	0.01 to 2.00 s	Y	Y	0.10	5-393
J455	Motor Increase Switching Time (Deceleration time)	0.00(Inherit): Depends on F08 0.01 to 6000 s	Y	Y	0.00	
J456	Motor Increase Switching Level	0 to 100 %	Y	Y	0	
J457	Motor Increase PID Control Start Frequency	0 to 599 Hz 999(Inherit): Depends on J452	Y	Y	999	
J458	Motor Decrease Switching Time (Acceleration time)	0.00(Inherit): Depends on F07 0.01 to 6000 s	Y	Y	0.00	5-394
J459	Motor Decrease Switching Level	0 to 100 999(Inherit): Depends on J456	Y	Y	999	
J460	Motor Decrease PID Control Start Frequency	0 to 599 Hz 999(Inherit): Depends on J450	Y	Y	999	
J461	Motor Increase/Decrease Switching Judgment Non-responsive Area Width	0.0(OFF): Disable 0.1 to 50.0%	Y	Y	0.0	5-395
J462	Failure Inverter Judgment Time	0.0(OFF): Disable 0.5 to 600.0 s	Y	Y	5.0	

Function code	Name	Control method and Data setting range	Change when running	Data copying	Factory default	Related page
J465	Auxiliary Motor (Frequency operation level)	0.0(OFF): Disable 0.1 to 599.0 Hz	Y	Y	60.0	5-396
J466	(Hysteresis width)	0.0 to 599.0 Hz	Y	Y	1.0	
J467	(PV operation level)	0.00(OFF): Disable, 0.01 to 9990 *103	Y	Y	0.00	5-397
J468	(Connection timer)	0.00 to 2.00 s	Y	Y	0.00	
J469	(Interrupting timer)	0.00 to 2.00 s	Y	Y	0.00	
J480	Motor Cumulative Run Time (Motor 0)	0 to 65535 For adjustment at the replacement time	Y	N	0	5-398
J481	(Motor 1)		Y	N	0	
J482	(Motor 2)		Y	N	0	
J483	(Motor 3)		Y	N	0	
J484	(Motor 4)		Y	N	0	
J485	(Motor 5)		Y	N	0	
J486	(Motor 6)		Y	N	0	
J487	(Motor 7)		Y	N	0	
J488	(Motor 8)		Y	N	0	
J490	Relay ON Maximum Cumulation Count (Y1RY Y2RY)	0.000 to 1000.000 The display of 1.000 indicates 1000 times.	Y	N	0.000	5-399
J491	(Y3RY Y4RY)		Y	N	0.000	
J492	(Y5A 30ABC)		Y	N	0.000	
J493	(Y6RY to Y12RY)		Y	N	0.000	

*103: The upper and lower level values are restricted by the maximum and minimum scales.

[14] J5 codes: Application Functions (Application function)

J5 code Supported with ROM0500 or later.

The control methods V/f PGV/f SLV PGV PMSLV PMPGV TRQ in these codes are valid.

Function code	Name	Control method and Data setting range	Change when running	Data copying	Factory default	Related page
J501	External PID Control 1 (Mode selection)	0: Disable 1: Enable process control (Normal operation) 2: Enable process control (Inverse operation) 11: Enable process control, interlocking with inverter running (Normal operation) 12: Enable process control, interlocking with inverter running (Inverse operation) 21: Enable process control by external digital signal (Normal operation) 22: Enable process control by external digital signal (Inverse operation) 31: Enable process control by external digital signal, interlocking with inverter running (Normal operation) 32: Enable process control by external digital signal, interlocking with inverter running (Inverse operation)	N	Y	0	5-400
J502	(Remote command selection)	0: ▲ or ▼ keys on keypad 3: UP/DOWN 4: Command via communications link (Use function code S13) 51: External PID command 1(Analog input terminals [12], [C1] and [V2])	N	Y	0	5-402
J503	(Feedback selection)	51: External PID feedback value 1 60: Addition (External PID feedback value 1 + External PID feedback value 2) 61: Difference External PID feedback value 1 - External PID feedback value 2) 62: Average (External PID feedback value 1, External PID feedback value 2) 63: Maximum (External PID feedback value 1, External PID feedback value 2) 64: Minimum (External PID feedback value 1, External PID feedback value 2)	N	Y	51	5-408
J504	(Deviation selection)	0: (J502) - (J503) 51: Maximum (Maximum deviation between external PID control 1 and 2) 52: Minimum (Minimum deviation between external PID control 1 and 2)	N	Y	0	5-410
J505	(Display unit)	Same as J105	N	Y	0	
J506	(Maximum scale)	-999 to 0.00 to 9990	N	Y	100.00	5-411
J507	(Minimum scale)	-999 to 0.00 to 9990	N	Y	0.00	
J510	P (Gain)	0.000 to 30.000 times 999(On/Off): On/Off control	Y	Y	0.100	5-412
J511	I (Integral time)	Same as J111	Y	Y	0.0	
J512	D (Differential time)	Same as J112	Y	Y	0.00	
J513	(Feedback filter)	Same as J113	Y	Y	0.5	
J514	(Anti-reset wind-up)	Same as J114 *103	Y	Y	0.00	5-417
J515	(ON/OFF control hysteresis width)	0.00 to 9990 *103	Y	Y	0.00	
J516	(Proportional operation output convergent value)	0 to 150 %	Y	Y	0	5-418
J517	(Proportional cycle)	1 to 150 s	Y	Y	30	5-419
J518	(Upper limit of PID process output)	-10 to +110 %	Y	Y	100	5-420
J519	(Lower limit of PID process output)	-10 to +110 %	Y	Y	0	
J520	(Upper and lower limits)	0: Limit PID output with J518, J519 1: 110%, -10% of PID output with J518 exceeded or less than J519	Y	Y	0	
J521	(Alarm output selection)	0: Absolute-value alarm (PV) 1: Absolute-value alarm (PV) (with Hold) 2: Absolute-value alarm (PV) (with Latch) 3: Absolute-value alarm (PV) (with Hold and Latch) 4: Deviation alarm (PV) 5: Deviation alarm (PV) (with Hold) 6: Deviation alarm (PV) (with Latch) 7: Deviation alarm (PV) (with Hold and Latch 8: Absolute-value alarm (SV) 9: Absolute-value alarm (SV) (with Hold) 10: Absolute-value alarm (SV) (with Latch) 11: Absolute-value alarm (SV) (with Hold and Latch) 12: Absolute-value alarm (MV) 13: Absolute-value alarm (MV) (with Hold) 14: Absolute-value alarm (MV) (with Latch) 15: Absolute-value alarm (MV) (with Hold and Latch)	Y	Y	0	5-421
J522	(Upper level alarm (AH))	Same as J122 *103	Y	Y	OFF	
J524	(Lower level alarm (AL))	Same as J124 *103	Y	Y	OFF	
J527	(Feedback error detection mode)	0: Disable (Turns ON output signals “EPV1-OFF” and continues operation.) 1: Enable (Free run stop (PUA trip)) 2: Enable (Deceleration and stop (PUA trip))	Y	Y	0	5-423
J529	(Feedback error upper-limit)	Same as J129 *103	Y	Y	AUTO	
J530	(Feedback error lower-limit)	Same as J130 *103	Y	Y	AUTO	
J531	(Feedback error detection time)	Same as J131	Y	Y	0.1	
J540	(Manual command)	0: ▲ or ▼ keys on keypad 8: ▲ or ▼ keys on keypad (Balanceless-bumpless) 51: External PID command 1(Analog input terminals [12], [C1] and [V2])	N	Y	0	5-425
J550	External PID Multistep Command (Mode selection)	0bit: Enable multistep command under external PID control 1 1bit: Enable multistep command under external PID control 2 2bit: Enable multistep command under external PID control 3	N	Y	00000	5-426
J551	(Multistep command 1)	-999 to 0.00 to 9990	Y	Y	0.00	
J552	(Multistep command 2)		Y	Y	0.00	
J553	(Multistep command 3)		Y	Y	0.00	

*103: The upper and lower level values are restricted by the maximum and minimum scales.

[15] J6 codes: Application Functions (Application function)

J6 code Supported with ROM0500 or later.

The control methods V/f PGV/f SLV PGV PMSLV PMPGV TRQ in these codes are valid.

Function code	Name	Control method and Data setting range	Change when running	Data copying	Factory default	Related page
J601	External PID Control 2 (Mode selection)	Same as J501	N	Y	0	5-427
J602	(Remote command selection)	0: ▲ or ▼ keys on keypad 3: UP/DOWN 4: Command via communications link (Use function code S13) 51: External PID command 1(Analog input terminals [12], [C1] and [V2]) 52: External PID command 2(Analog input terminals [12], [C1] and [V2]) 111: Apply external PID control 1 commands	N	Y	0	
J603	(Feedback selection)	51: External PID feedback value 1 52: External PID feedback value 2	N	Y	52	
J605	(Display unit)	Same as J505	N	Y	0	
J606	(Maximum scale)	Same as J506	N	Y	100.00	
J607	(Minimum scale)	Same as J507	N	Y	0.00	
J610	P (Gain)	Same as J510	Y	Y	0.100	
J611	I (Integral time)	Same as J511	Y	Y	0.0	
J612	D (Differential time)	Same as J512	Y	Y	0.00	
J613	(Feedback filter)	Same as J513	Y	Y	0.5	
J614	(Anti-reset wind-up)	Same as J514	Y	Y	0.00	
J615	(ON/OFF control hysteresis width)	Same as J515 *103	Y	Y	0.00	
J616	(Proportional operation output convergent value)	Same as J516 *103	Y	Y	0	
J617	(Proportion cycle)	Same as J517	Y	Y	30	
J618	(Upper limit of PID process output)	Same as J518	Y	Y	100	5-428
J619	(Lower limit of PID process output)	Same as J519	Y	Y	0	
J620	(Upper and lower limits)	0: Limit PID output with J618, J619 1: 110%, -10% of PID output with J618 exceeded or less than J619	Y	Y	0	
J621	(Alarm output selection)	Same as J521	Y	Y	0	
J622	(Upper level alarm (AH))	Same as J522 *103	Y	Y	OFF	
J624	(Lower level alarm (AL))	Same as J524 *103	Y	Y	OFF	
J627	(Feedback error detection mode)	0: Disable (Turns ON output signals “EPV2-OFF” and continues operation.) 1: Enable (Free run stop (Pub trip)) 2: Enable (Deceleration and stop (Pub trip))	Y	Y	0	
J629	(Feedback error upper-limit)	Same as J529 *103	Y	Y	AUTO	
J630	(Feedback error lower-limit)	Same as J530 *103	Y	Y	AUTO	
J631	(Feedback error detection time)	Same as J531	Y	Y	0.1	
J640	(Manual command)	0: ▲ to ▼ keys on keypad 8: ▲ to ▼ keys on keypad (Balanceless-bumpless) 51: External PID command 1(Analog input terminals [12], [C1] and [V2]) 52: External PID command 2(Analog input terminals [12], [C1] and [V2]) 111: Apply external PID control 1 commands	N	Y	0	
J651	External PID Control 3 (Mode selection)	Same as J501	N	Y	0	
J652	(Remote command selection)	0: ▲ to ▼ keys on keypad 3: UP/DOWN 4: Command via communications link (Use function code S32) 51: External PID command 1(Analog input terminals [12], [C1] and [V2]) 52: External PID command 2(Analog input terminals [12], [C1] and [V2]) 53: External PID command 3(Analog input terminals [12], [C1] and [V2]) 111: Apply external PID control 1 commands 112: Apply external PID control 2 commands	N	Y	0	
J653	(Feedback selection)	51: External PID feedback value 1 52: External PID feedback value 2 53: External PID feedback value 3	N	Y	53	
J655	(Display unit)	Same as J605	N	Y	0	
J656	(Maximum scale)	-999 to 0.00 to 9990	N	Y	100.00	
J657	(Minimum scale)	-999 to 0.00 to 9990	N	Y	0.00	
J660	P (Gain)	0.000 to 30.000 times On/Off(32767): On/Off control	Y	Y	0.100	5-429
J661	I (Integral time)	0.0 to 3600.0 s	Y	Y	0.0	
J662	D (Differential time)	0.00 to 600.00 s	Y	Y	0.00	
J663	(Feedback filter)	0.0 to 900.0 s	Y	Y	0.5	
J664	(Anti-reset wind-up)	OFF(0.00): Desable, 0.01 to 9990 *103	Y	Y	0.00	
J665	(ON/OFF control hysteresis width)	0.00 to 9990 *103	Y	Y	0.00	
J666	(Proportional operation output convergent value)	0 to 150 %	Y	Y	0	
J667	(Proportion cycle)	1 to 150 s	Y	Y	30	
J668	(Upper limit of PID process output)	-10 to +110 %	Y	Y	100	
J669	(Lower limit of PID process output)	-10 to +110 %	Y	Y	0	

Function code	Name	Control method and Data setting range	Change when running	Data copying	Factory default	Related page
J670	(Upper and lower limits)	0: Limit PID output with J618, J619 1: 110%, -10% of PID output with J618 exceeded or less than J619	Y	Y	0	5-429
J671	(Alarm output selection)	0: Absolute-value alarm (PV) 1: Absolute-value alarm (PV) (with Hold) 2: Absolute-value alarm (PV) (with Latch) 3: Absolute-value alarm (PV) (with Hold and Latch) 4: Deviation alarm (PV) 5: Deviation alarm (PV) (with Hold) 6: Deviation alarm (PV) (with Latch) 7: Deviation alarm (PV) (with Hold and Latch 8: Absolute-value alarm (SV) 9: Absolute-value alarm (SV) (with Hold) 10: Absolute-value alarm (SV) (with Latch) 11: Absolute-value alarm (SV) (with Hold and Latch) 12: Absolute-value alarm (MV) 13: Absolute-value alarm (MV) (with Hold) 14: Absolute-value alarm (MV) (with Latch) 15: Absolute-value alarm (MV) (with Hold and Latch)	Y	Y	0	
J672	(Upper level alarm (AH))	-999 to 0.00 to 9990, OFF *103	Y	Y	OFF	
J674	(Lower level alarm (AL))	-999 to 0.00 to 9990, OFF *103	Y	Y	OFF	
J677	(Feedback error detection mode)	0: Disable (Turns ON output signals “EPV3-OFF” and continues operation.) 1: Enable (Free run stop (PUC trip)) 2: Enable (Deceleration and stop (PUC trip))	Y	Y	0	
J679	(Feedback error upper-limit)	-999 to 0.00 to 9990, AUTO: 105% equivalent *103	Y	Y	AUTO	
J680	(Feedback error lower-limit)	-999 to 0.00 to 9990, AUTO: -5% equivalent *103	Y	Y	AUTO	
J681	(Feedback error detection time)	0.0 to 300.0 s	Y	Y	0.1	
J690	(Manual commands)	0: ▲ to ▼ keys on keypad 8: ▲ to ▼ keys on keypad (Balanceless-bumpless) 51: External PID command 1(Analog input terminals [12], [C1] and [V2]) 52: External PID command 2(Analog input terminals [12], [C1] and [V2]) 53: External PID command 3(Analog input terminals [12], [C1] and [V2]) 111: Apply external PID control 1 commands 112: Apply external PID control 2 commands	N	Y	0	

*103: The upper and lower level values are restricted by the maximum and minimum scales.

[16] d codes: Application Functions 2 (Application functions 2)

Function code	Name	Control method and Data setting range	Change when running	Data copying	Factory default	Related page
d01	Speed control 1 (Speed command filter)	V/f PGV/f SLV PGV PM SLV PM PGV TRQ 0.000 to 5.000 s If F42=15, 16, 0.200 s is automatically set.	Y	Y	0.020	5-430
d02	(Speed detection filter)	V/f PGV/f SLV PGV PM SLV PM PGV TRQ 0.000 to 0.100 s If F42=15, 16, 0.025 s is automatically set.	Y*	Y	0.005	
d03	P (Gain)	V/f PGV/f SLV PGV PM SLV PM PGV TRQ 0.1 to 200.0 times If F42=15, 16, 2.0 times is automatically set.	Y*	Y	10.0	
d04	I (Integral time)	V/f PGV/f SLV PGV PM SLV PM PGV TRQ 0.001 to 9.999 s; 999: Disable integral term If F42=15, 16, 0.600 s is automatically set.	Y*	Y	0.100	
d05	FF (Gain)	V/f PGV/f SLV PGV PM SLV PM PGV TRQ 0.00 to 99.99 s	Y*	Y	0.00	
d06	(Output filter)	V/f PGV/f SLV PGV PM SLV PM PGV TRQ 0.000 to 0.100 s If F42=15, 16, 0.000 s is automatically set.	Y	Y	0.002	
d07	(Notch filter resonance frequency)	V/f PGV/f SLV PGV PM SLV PM PGV TRQ 1 to 500 Hz	Y	Y	200	5-433
d08	(Notch filter attenuation level)	V/f PGV/f SLV PGV PM SLV PM PGV TRQ 0 to 40 dB	Y	Y	0	
d09	Speed control (JOG) (Speed command filter)	V/f PGV/f SLV PGV PM SLV PM PGV TRQ 0.000 to 5.000 s	Y	Y	0.020	5-431
d10	(Speed detection filter)	0.000 to 0.100 s	Y*	Y	0.005	
d11	P (Gain)	0.1 to 200.0 times	Y*	Y	10.0	
d12	I (Integral time)	0.001 to 9.999 s, 999: Disable integral term	Y*	Y	0.100	
d13	(Output filter)	0.000 to 0.100 s	Y	Y	0.002	
d14	PG option Ch2 (Pulse train input) (Pulse input format)	V/f PGV/f SLV PGV PM SLV PM PGV TRQ 0: Frequency and direction 1: Forward and reverse pulse 2: Quadrature A/B signal (B phase lead) 3: Quadrature A/B signal (A phase lead) 4: A, B phase 90° phase difference (B phase lead) UVW signal (for synchronous motors)	N	Y	2	5-435
d15	(Encoder pulse resolution)	0014 to EA60(Hexadecimal format), 20 to 60000(Decimal format)	N	Y	h.0400 (1024)	
d16	(Pulse scaling factor 1)	1 to 32767	Y	Y	1	
d17	(Pulse scaling factor 2)	1 to 32767	Y	Y	1	
d18	(Filter time constant)	0.000 to 5.000 s	Y	Y	0.005	
d21	Speed agreement / Speed deviation error (Hysteresis width)	V/f PGV/f SLV PGV PM SLV PM PGV TRQ 0.0 to 50.0 %	Y	Y	10.0	5-437
d22	(Detection timer)	0.00 to 10.00 s	Y	Y	0.50	
d23	Speed deviation error processing	V/f PGV/f SLV PGV PM SLV PM PGV TRQ 0: Continue to run 1 1: Stop with alarm 1 2: Stop with alarm 2 3: Continue to run 2 4: Stop with alarm 3 5: Stop with alarm 4	N	Y	2	
d24	Zero speed control	V/f PGV/f SLV PGV PM SLV PM PGV TRQ 0: Disable at startup 1: Enable at startup 2: Zero speed control not possible	N	Y	0	5-438
d25	ASR switching time	V/f PGV/f SLV PGV PM SLV PM PGV TRQ 0.000 to 1.000 s	Y	Y	0.000	
d27	Servo lock (Gain switching time)	V/f PGV/f SLV PGV PM SLV PM PGV TRQ 0.000 to 1.000 s	Y	Y	0.000	5-324 5-438
d28	(Gain 2)	0.000 to 9.999 times	Y	Y	0.010	
d29	Speed control 1 (Notch filter width)	V/f PGV/f SLV PGV PM SLV PM PGV TRQ 0 to 3 (0: Narrow to 3: Wide)	Y	Y	2	5-433 5-438
d30	ASR gain setting *101	V/f PGV/f SLV PGV PM SLV PM PGV TRQ 0: Disable 1: ASR gain setting	N	N	0	
d32	Speed limit / Overspeed detection level (Level 1)	V/f PGV/f SLV PGV PM SLV PM PGV TRQ 0 to 110 %	Y	Y	100	
d33	(Level 2)	0 to 110 %	Y	Y	100	

Function code	Name	Control method and Data setting range	Change when running	Data copying	Factory default	Related page
d35	Over speed detection level	V/f PGV/f SLV PGV PM SLV PM PGV TRQ 0 to 120%, 999: Based on d32, d33	Y	Y	999	
d41	Application specific function selection	V/f PGV/f SLV PGV PM SLV PM PGV TRQ 0: Disable (Normal control) 1: Enable (Constant surface speed control) 2: Master-follower operation (Immediate synchronization mode at the start, without Z phase) 3: Master-follower operation (Master-follower operation) 4: Master-follower operation (Immediate synchronization mode at the start, with Z phase)	N	Y	0	5-439
d51	For adjustment by manufacturer *9	-500 to 500	N	Y	*14	5-442
d52	For adjustment by manufacturer *9	-500 to 500	N	Y	*14	
d53	For adjustment by manufacturer *9	-500 to 500	N	Y	*14	
d54	For adjustment by manufacturer *9	-500 to 500	N	Y	*14	
d55	For adjustment by manufacturer *9	0000 to 00FF (Display in hexadecimal)	N	Y	h.0000	
d56	For adjustment by manufacturer *9 *101	0.00 to 50.00 %	N	Y	20.00	
d57	For adjustment by manufacturer *9 *101	0000_H to $00FF_H$ (Display in hexadecimal)	N	Y	h.0000	
d59	PG option Ch1 / Terminal [X] (Pulse train input) (Pulse input format)	V/f PGV/f SLV PGV PM SLV PM PGV TRQ 0: Pulse train sign / Pulse train input 1: Forward rotation pulse / Reverse rotation pulse 2: A, B phase 90° phase difference (B phase lead) 3: A, B phase 90° phase difference (A phase lead)	N	Y	0	
d60	(Encoder pulse resolution)	0014 to EA60(Hexadecimal format), 20 to 60000(Decimal format)	N	Y	h.0400 (1024)	
d61	(Filter time constant)	0.000 to 5.000 s	Y	Y	0.005	
d62	(Pulse scaling factor 1)	1 to 32767	Y	Y	1	
d63	(Pulse scaling factor 2)	1 to 32767	Y	Y	1	
d67	Starting characteristic (Auto search mode: speed sensorless vector control)	V/f PGV/f SLV PGV PM SLV PM PGV TRQ 0: Disable (Do not set to 0 if performing restart after momentary power failure. Failure to observe this could result in motor damage.) 1: Enable (Only at restart after momentary power failure) 2: Enable (At restart after momentary power failure and at normal start) If F42 = 15, 2 is automatically set.	N	Y	1	5-249 5-442
d68	For adjustment by manufacturer *9	0.0 to 10.0	N	Y	4.0	5-442
d69	For adjustment by manufacturer *9	30.0 to 100.0	Y	Y	30.0	
d70	Speed control limiter	V/f PGV/f SLV PGV PM SLV PM PGV TRQ 0.00 to 100.00 %	Y	Y	100.00	
d71	Master follower control (Main speed regulator gain)	V/f PGV/f SLV PGV PM SLV PM PGV TRQ 0.00 to 1.50 times	Y	Y	1.00	5-442
d72	(APR gain)	0.00 to 200.00 times	Y	Y	15.00	
d73	(APR output +side limiter)	20 to 200 %: Limiter level 999: Disable	Y	Y	999	
d74	(APR output -side limiter)	20 to 200 %: Limiter level 999: Disable	Y	Y	999	
d75	(Z phase alignment gain)	0.00 to 10.00 times	Y	Y	1.00	
d76	(Offset angle between master and follower)	0 to 359 deg.	Y	Y	0	
d77	(Synchronous completion detection angle)	0 to 359 deg.	Y	Y	15	
d78	(Deviation overflow detection width)	0 to 65535 (10 pulse units)	Y	Y	65535	
d79	For adjustment by manufacturer *9	0, 80 to 240 (200 V series), 160 to 500 (400 V series), 999	N	Y2	999	5-470
d80	Motor 1 (Synchronous motor magnetic pole position draw-in frequency)	V/f PGV/f SLV PGV PM SLV PM PGV TRQ 0.1 to 10.0 Hz	Y	Y	1.0	
d81	For adjustment by manufacturer *9	0 to 1	Y	Y	1	

Function code	Name	Control method and Data setting range	Change when running	Data copying	Factory default	Related page
d82	Magnetic flux weakening control	V/f PGV/f SLV PGV PMSLV PMPGV TRQ 0: Disable 1: Enable	Y	Y	1	5-470
d83	Magnetic flux weakening lower limit value	V/f PGV/f SLV PGV PMSLV PMPGV TRQ 10 to 70 %	Y	Y	40	
d84	For adjustment by manufacturer *9	0 to 20	Y	Y	5	
d85	For adjustment by manufacturer *9	0 to 200	Y	Y	95	
d86	Acceleration/deceleration output filter	V/f PGV/f SLV PGV PMSLV PMPGV TRQ 0.000 to 5.000 s	Y	Y	0.000	
d88	For adjustment by manufacturer *9	0.00 to 10.00, 999	Y	Y	999	
d89	Motor 1 (Synchronous motor high-efficiency control)	V/f PGV/f SLV PGV PMSLV PMPGV TRQ 0 to 1	N	Y	1	
d90	Magnetic flux level during deceleration	V/f PGV/f SLV PGV PMSLV PMPGV TRQ 100 to 300 %	Y	Y	120	5-268 5-470
d91	For special adjustment	0.00 to 2.00, 999	Y	Y	999	5-470
d92	For special adjustment	0, 0.01 to 3.00	Y	Y	0.00	
d93	For adjustment by manufacturer *9	0.00 to 10.00, 999	Y	Y	999	
d94	For adjustment by manufacturer *9	0.00 to 10.00, 999	Y	Y	999	
d95	For adjustment by manufacturer *9	0.00 to 10.00, 999	Y	Y	999	
d96	For adjustment by manufacturer *9	-50.0 to 50.0, 999	Y	Y	999	
d97	For adjustment by manufacturer *9	-50.0 to 50.0, 999	Y	Y	999	
d98	For special adjustment	0 to 65535	Y	Y	0	
d99	Extension function 1	V/f PGV/f SLV PGV PMSLV PMPGV TRQ 0000 to FFFF (Display in hexadecimal) Bit 0: For adjustment by manufacturer *9 Bit 1: For adjustment by manufacturer *9 Bit 2: For adjustment by manufacturer *9 Bit 3: JOG operation from communication (0: Disable; 1: Enable) Bit 4: For adjustment by manufacturer *9 Bit 5, 6, 7: Not used Bit 8: For adjustment by manufacturer *9 Bit 9: For adjustment by manufacturer *9 Bit 10: H30 definition switching	Y	Y	0000	5-471

*9: This is a function code for adjustment by the manufacturer. Do not change.
*14: The factory default is set based on capacity.
5 for FRN0003 to 0018G2S-2G/FRN0002 to 0009G2□-4G,
10 for FRN0032 to 0115G2S-2G/FRN0018 to 0060G2□-4G,
20 for FRN0146 to 0432G2S-2G/FRN0085 to 1480G2□-4G
*100: Supported with ROM0300 or later.
*101: Supported with ROM0500 or later.

[17] d1 codes: Application Functions 2 (Application functions 2)

Function code	Name	Control method and Data setting range	Change when running	Data copying	Factory default	Related page
d120	Brake signal (Brake-release current) (REV)	V/f PGV/f SLV PGV PMSLV PMPGV TRQ 0.00 to 300.00 %, 999:depends on the setting value of J68	Y	Y	999	5-320 5-472
d121	Brake control signal (Brake-release frequency/speed) (REV)	V/f PGV/f SLV PGV PMSLV PMPGV TRQ 0.0 to 25.0 Hz, 999:depends on the setting value of J69	Y	Y	999	
d122	Brake control signal (Brake-release timer) (REV)	V/f PGV/f SLV PGV PMSLV PMPGV TRQ 0.0 to 5.000 s, 999:depends on the setting value of J70	Y	Y	999	
d123	Brake signal (Brake-release torque) (REV)	V/f PGV/f SLV PGV PMSLV PMPGV TRQ 0.00 to 300.00 %, 999:depends on the setting value of J95	Y	Y	999	
d124	Brake control signal (Brake-apply frequency/speed) (REV)	V/f PGV/f SLV PGV PMSLV PMPGV TRQ 0.0 to 25.0 Hz, 999:depends on the setting value of J71	Y	Y	999	
d125	Brake control signal (Brake-apply timer) (REV)	V/f PGV/f SLV PGV PMSLV PMPGV TRQ 0.000 to 5.000 s, 999	Y	Y	999	
d132	For adjustment by manufacturer *9	0.000～1.000 *105	Y	Y1 Y2	0.500	5-484
d150	PID control (Dancer upper limit warning position)	V/f PGV/f SLV PGV PMSLV PMPGV TRQ -100.00 to 100.00 %	Y	Y	100.00	5-316 5-472
d151	(Dancer lower limit warning position)	V/f PGV/f SLV PGV PMSLV PMPGV TRQ -100.00 to 100.00 %	Y	Y	0.00	
d152	(Line speed lower limit for dancer PID output)	0.0 to 599.0 Hz	Y	Y	0.0	5-472
d153	Line speed control (Line speed compensation gain)	V/f PGV/f SLV PGV PMSLV PMPGV TRQ 0.0 to 200.0 %	Y	Y	100.0	
d154	(Selector switch)	0 to 1 Bit 0: Winding diameter compensation (0: No, 1: Yes)	N	Y	0	5-473
d158	Winding diameter calculation (Moving average count)	V/f PGV/f SLV PGV PMSLV PMPGV TRQ 0 to 100	Y	Y	0	5-473 5-474
d159	(Dead zone)	0.000 to 10.000 %	Y	Y	0.001	
d160	(Calculation gain)	0.00 to 1.00	Y	Y	0.10	
d161	(Compensation gain)	0.000 to 10.000	Y	Y	1.000	
d162	(Low-speed line speed ratio)	0.00 to 100.00 %	Y	Y	3.00	
d163	(Minimum winding diameter)	1 to 65535 mm (3,300 to 4,900 ft)	Y	Y	100	5-475
d164	(Maximum winding diameter)	1 to 65535 mm (3,300 to 4,900 ft)	Y	Y	1100	
d165	(Initial winding diameter)	1 to 65535 mm (3,300 to 4,900 ft)	Y	Y	700	
d166	(FM output gain)	0.0 to 100.0	Y	Y	20.0	5-475 5-476
d167	Line speed command (Maximum value)	V/f PGV/f SLV PGV PMSLV PMPGV TRQ 0.0: Disable 0.1 to 6553.5 m/min	N	Y	0.0	5-476
d168	(Acceleration time)	0.00 to 6000 s	Y	Y	*10	
d169	(Deceleration time)	0.00 to 6000 s	Y	Y	*10	
d170	After detected load compensation (dedicated monitor function code)	V/f PGV/f SLV PGV PMSLV PMPGV TRQ -327.68 to 327.67 %	-	N	-	5-478
d171	Load conversion gain (hoisting)	-200.00 to 200.00 %	Y	Y	100.00	
d172	Load conversion offset (hoisting)	-100.0 to 100.0 %	Y	Y	0.0	
d173	Load conversion gain (lowering)	-200.00 to 200.00 %	Y	Y	100.00	
d174	Load conversion offset (lowering)	-100.0 to 100.0 %	Y	Y	0.0	
d175	Light load speed multiplying factor (hoisting)	100.0 to 300.0 %, 999	Y	Y	100.0	
d176	(lowering)	100.0 to 300.0 %, 999	Y	Y	100.0	
d177	Medium load speed multiplying factor (hoisting)	100.0 to 300.0 %,999	Y	Y	100.0	
d178	(lowering)	100.0 to 300.0 %, 999	Y	Y	100.0	
d179	Speed multiplying factor safety factor	1.0 to 4.0	Y	Y	1.0	
d180	Load judgment delay time (hoisting)	0.00 to 10.00 s	Y	Y	2.00	
d181	(lowering)	0.00 to 10.00 s	Y	Y	2.00	

Function code	Name	Control method and Data setting range	Change when running	Data copying	Factory default	Related page
d182	Light load detection level (hoisting)	5.0 to 100.0 %, 999	Y	Y	25.0	
d183	(lowering)	5.0 to 100.0 %, 999	Y	Y	25.0	
d184	Heavy load detection level (hoisting)	5.0 to 100.0 %, 999	Y	Y	25.0	
d185	(lowering)	5.0 to 100.0 %, 999	Y	Y	25.0	
d186	Overload judgment delay time	0.00 to 10.00 s	Y	Y	0.50	
d187	Overload detection level	5.0 to 250.0 %, 999	Y	Y	999	
d188	Overload detection monitor	-327.68 to 327.67 %	-	N	-	
d189	Hoist function auxiliary setting	V/f PGV/f SLV PGV PMSLV PMPGV TRQ 0000 to 00FF (Display in hexadecimal) Bit 0: Medium load speed multiplying factor selection (0: Fixed multiplying factor, 1: Proportional to load)	Y	Y	h.0000	
d190	For adjustment by manufacturer *9	0 to 150	Y	Y	0	5-484
d192	For adjustment by manufacturer *9	0.00 to 10.00	Y	Y	0.30	
d193	Special adjustment (Torque scaling factor for high load)	V/f PGV/f SLV PGV PMSLV PMPGV TRQ 0.0 to 30.0 %, 999 (Auto)	Y*	Y	999	
d194	Special adjustment (Torque scaling factor for high load (for driving))	0.0 to 30.0 %, 999 (Same value as d193)	Y*	Y	999	
d195	Special adjustment (Torque scaling factor for high load (for braking))	0.0 to 30.0 %, 999 (Same value as d193)	Y*	Y	999	
d196	Special adjustment (Torque scaling effective speed for high load (for driving))	0 to 50 times	Y	Y	4	
d197	Special adjustment (Torque scaling effective speed for high load (for braking))	0 to 50 times	Y	Y	4	
d198	For adjustment by manufacturer *9	0 to 65535	Y	Y	0	
d199	For adjustment by manufacturer *9	0000 to 00FF (Display in hexadecimal)	N	Y	h.0000	

*9: This is a function code for adjustment by the manufacturer. Do not change.

*10: 6.00 s for FRN0003 to 0115G2S-2G/FRN0002 to 0060G2□-4G, 20.00 s for FRN0146 to 0432G2S-2G/FRN0085 to 1480G2□-4G

*105: Supported with ROM0700 or later.

[18] d2 codes: Application Functions 2 (Application functions 2)

The control methods (V/f PGV/f SLV PGV PM SLV PM PGV TRQ) in d2 codes are valid.

Function code	Name	Control method and Data setting range	Change when running	Data copying	Factory default	Related page
d201	Position feed forward gain	0.00: Disables feed forward 0.01 to 1.50	Y*	Y	0.00	5-485
d202	Position feed forward command filter	0.000 to 5.000 s	Y*	Y	0.500	
d203	Position regulator gain 1 (Low-speed range)	0.1 to 300.0	Y*	Y	1.0	
d204	Position regulator gain 2 (High-speed range)	0.1 to 300.0	Y*	Y	1.0	
d205	Position regulator gain switching frequency	0.0 to 599.0 Hz	Y	Y	0.0	
d206	Electronic gear ratio denominator	1 to 65535	N	Y	1	
d207	Electronic gear ratio numerator	1 to 65535	N	Y	1	
d208	Orientation mode selection	0: With shortcut (Run command direction and with reverse rotation) 1: Without shortcut (Run command direction)	N	Y	1	
d209	Homing mode selection	0000 to 00FF (Display in hexadecimal) Bit 0: Homing starting direction 0: Forward rotation direction 1: Reverse rotation direction Bit 1: Homing direction 0: Forward rotation direction 1: Reverse rotation direction Bit 2: Homing OT operation selection 0: Reverse rotation following OT detection 1: Stop following OT detection (homing aborted) Bit 3: Home position LS timing selection 0: ON edge detection 1: OFF edge detection Bit 7: Z-phase compensation 0: Disable 1: Enable	N	Y	h.0000	
d210	Homing stopper detection time	0.000 to 10.000 s	Y	Y	0.000	
d211	Homing reference signal	0: Encoder Z-phase 1: Home position LS 2: +OT 3: -OT	N	Y	1	
d212	Homing shift reference signal	0: Encoder Z-phase 1: Home position LS enable edge (wire to XZ for ORT) 2: +OT (enable only when performing position control) 3: -OT (enable only when performing position control) 4: Stopper (stopper contact)	N	Y	0	
d213	Homing frequency/orientation frequency	0.1 to 599.0 Hz	Y	Y	5.0	
d214	Homing creep frequency	0.1 to 599.0 Hz	Y	Y	0.5	
d215	Homing deceleration time/orientation deceleration time	0.00 to 6000 s	Y	Y	6.00	
d216	Positioning data teaching (Positioning data number designation)	0: Disable 1 to 8: Enable (writes feedback current position written to positioning data 1 to 8)	Y	Y	0	
d217	Homing shift teaching	0: Disable 1: Enable (Calculate the position of Z phase and machine origin at orientation from the Z phase distance and preset amount, and write to d242 and d243.)	Y	Y	0	
d218	Software OT detection position teaching (+/- designation)	0: Disable 1: Enable (Writes feedback current position to +OT detection position d225, d226) 2: Enable (Writes feedback current position to -OT detection position d227, d228)	Y	N	0	
d219	Pass point detection position teaching (Pass point position designation)	0: Disable 1: Enable (Writes feedback current position to pass point 1 d229, d230) 2: Enable (Writes feedback current position to pass point 2 d231, d232)	Y	N	0	
d220	Feedback current position memory selection	0: Do not memorize 1: Memorize following undervoltage	Y	Y	0	
d221	Position clear signal (P-CLR) operation selection	0: Clear at active edge (positive logic/negative logic OFF → ON) 1: Clear at level (positive logic/negative logic ON)	Y	Y	0	
d222	Software OT operation selection	0: Disable software OT (Endless) 1: Enable software OT (Limit target position with software OT) 2: Enable software OT (Emergency stop when software OT detected)	Y	Y	0	
d223	Deviation detection overflow value (High order	0 to 9999 User value * Disable when 0 for both d223, d224	Y	Y	0	
d224	(Low order)		Y	Y	0	

Function code	Name	Control method and Data setting range	Change when running	Data copying	Factory default	Related page
d225	+ software OT detection position (High order)	-9999 to 9999 User value	N	Y	9999	5-485
d226	(Low order)	0 to 9999 User value	N	Y	9999	
d227	- software OT detection position (High order)	Same as d225	N	Y	-9999	
d228	(Low order)	Same as d226	N	Y	9999	
d229	Pass point detection position 1 (High order)	Same as d225	Y	Y	0	
d230	(Low order)	Same as d226	Y	Y	0	
d231	Pass point detection position 2 (High order)	Same as d225	Y	Y	0	
d232	(Low order)	Same as d226	Y	Y	0	
d237	Positioning data type (INC/ABS switching)	0: Handle positioning data as absolute position (ABS) 1: Handle positioning data as travel (INC)	Y	Y	0	
d238	Positioning data selection signal agreement timer	0.000 to 0.100 s	Y	Y	0.000	
d239	In-position range	0 to 9999 User value	Y	Y	1	
d240	Preset position (High order)	-9999 to 9999 User value	Y	Y	0	
d241	Preset position (Low order)	0 to 9999 User value	Y	Y	0	
d242	Homing shift (High order)	0 to 9999 User value	Y	Y	0	
d243	Homing shift (Low order)	0 to 9999 User value	Y	Y	0	
d244	Positioning data 1 (High order)	-9999 to 9999 User value	Y	Y	0	
d245	(Low order)	0 to 9999 User value	Y	Y	0	
d246	Positioning data 2 (High order)	Same as d244	Y	Y	0	
d247	(Low order)	Same as d245	Y	Y	0	
d248	Positioning data 3 (High order)	Same as d244	Y	Y	0	
d249	(Low order)	Same as d245	Y	Y	0	
d250	Positioning data 4 (High order)	Same as d244	Y	Y	0	
d251	(Low order)	Same as d245	Y	Y	0	
d252	Positioning data 5 (High order)	Same as d244	Y	Y	0	
d253	(Low order)	Same as d245	Y	Y	0	
d254	Positioning data 6 (High order)	Same as d244	Y	Y	0	
d255	(Low order)	Same as d245	Y	Y	0	
d256	Positioning data 7 (High order)	Same as d244	Y	Y	0	
d257	(Low order)	Same as d245	Y	Y	0	
d258	Positioning data 8 (High order)	Same as d244	Y	Y	0	
d259	(Low order)	Same as d245	Y	Y	0	
d276	Positioning data (Infinite direction)	0: Disable 1: Forward rotation direction 2: Reverse rotation direction	Y	Y	0	
d277	Positioning data communication command selection	0: Disable positioning data communication command 1: Enable positioning data communication command	Y	Y	0	
d280	Forced deceleration operation selection	0: Servo lock after deceleration stop 1: Er6 alarm after deceleration stop	Y	Y	0	
d296	Command current position monitor (High order)	Same as d244	-	N	-	
d297	(Low order)	Same as d245	-	N	-	
d298	Feedback current position monitor (High order)	Same as d244	-	N	-	
d299	(Low order)	Same as d245	-	N	-	

[19] U codes: Customizable logic Functions (Customizable logic Functions)

Excluding certain exceptions, all control methods (V/f PGV/f SLV PGV PMSLV PMPGV TRQ) in these codes are valid.

Function code	Name	Control method and Data setting range	Change when running	Data copying	Factory default	Related page
U00	Customizable logic (Mode selection)	0: Disable 1: Enable (Customizable logic operation) Err alarm occurs when the value is changed from 1 to 0 during operation.	Y	Y	0	5-515
U01	Customizable logic Step 1 (Block selection)	[Digital] 0: No function assigned 10 to 15: Through output + general-purpose timer (*) 20 to 25: Logical AND + general-purpose timer (*) 30 to 35: Logical OR + general-purpose timer (*) 40 to 45: Logical XOR + general-purpose timer (*) 50 to 55: Set priority flip-flop + general-purpose timer (*) 60 to 65: Reset priority flip-flop + general-purpose timer (*) 70, 72, 73: Rising edge detector + general-purpose timer (*) 80, 82, 83: Falling edge detector + general-purpose timer (*) 90, 92, 93: Rising & falling edges detector + general-purpose timer (*) 100 to 105: Hold + general-purpose timer (*) 110: Increment counter 120: Decrement counter 130: Timer with reset input 140 to 145: D flip-flop + general-purpose timer (*) 150 to 155: T flip-flop + general-purpose timer (*) (*) General-purpose timer function (least significant digit 0 to 5) _0: No timer _1: On-delay timer _2: Off-delay timer _3: One-shot pulse output _4: Retriggerable timer _5: Pulse train output [Analog] 2001: Adder 2002: Subtracter 2003: Multiplier 2004: Divider 2005: Limiter 2006: Absolute value 2007: Inverting adder 2008: Variable limiter 2009: Linear function 2010: Remainder 2011: limiter 2 *101 2013: Dead zone *101 2051 to 2058: Comparator 1 to 8 2059: Equivalent comparator 2 2060: Comparator 9 *101 2071: Window comparator 1 2072: Window comparator 2 2101: High selector 2102: Low selector 2103: Average of inputs 2151: Function code (S13 loading) 2201: Clip and map function 2202: Scale converter 3001: Quadratic function 3002: Square root function [Digital + analog] 4001: Hold 4002: Inverting adder switching 4003: Selector 1 4004: Selector 2 4005: LPF (Low pass filter) 4006: Rate limiter with enable 5000: Selector 3 5100: Selector 4 6001: Reading function code 6002: Writing function code 6003: Temporary change of function code 6004: Function code link 6011: Bit extraction (S code) 6012: Bit extraction (M code) 6013: Bit extraction (W code) 6014: Bit extraction (X code) 6015: Bit extraction (Z code) 6101: PID dancer output gain frequency	N	Y	0	

Function code	Name	Control method and Data setting range	Change when running	Data copying	Factory default	Related page
U02	Customizable logic Step 1 (Input 1)	Some signals are invalid depending on the control method. Refer to E20 and E61 for details.	N	Y	100	5-515
U03	(input 2)	[Digital] 0 (1000): Inverter running 1 (1001): Frequency (speed) arrival “FAR” 2 (1002): Frequency (speed) detected “FDT” 3 (1003): Under voltage detected (inverter stopped) “LU” 4 (1004): Detected torque polarity “B/D” 5 (1005): Inverter output limiting “IOL” 6 (1006): Auto-restarting after momentary power failure “IPF” 7 (1007): Motor overload early warning “OL” 8 (1008): Keypad operation “KP” 10 (1010): Inverter ready to run “RDY” 11 (1011): Commercial/inverter power supply switching “SW88” 12 (1012): Commercial/inverter power supply switching “SW52-2” 13 (1013): Commercial/inverter power supply switching “SW52-1” 15 (1015): Switch MC on the input power lines “AX” 16 (1016): Pattern operation stage transition “TU” 17 (1017): Pattern operation cycle completed “TO” 18 (1018): Pattern operation stage 1 “STG1” 19 (1019): Pattern operation stage 2 “STG2 20 (1020): Pattern operation stage 4 “STG4” 21 (1021): Frequency (speed) arrival 2 “FAR2” 22 (1022): Inverter output limiting with delay “IOL2” 25 (1025): Cooling fan in operation “FAN” 26 (1026): Auto-resetting “TRY” 28 (1028): Heat sink overheat early warning “OH” 29 (1029): Master-follower operation complete “SY” 30 (1030): Lifetime alarm “LIFE” 31 (1031): Frequency (speed) detected 2 “FDT2” 33 (1033): Reference loss detected “REF OFF” 35 (1035): Inverter outputting “RUN 2” 36 (1036): Overload prevention controlling “OLP” 37 (1037): Current detected “ID” 38 (1038): Current detected 2 “ID2” 39 (1039): Current detected 3 “ID3” 41 (1041): Low current detected “IDL” 42 (1042): PID alarm “PID-ALM” 43 (1043): Under PID control “PID-CTL” 44 (1044): Under sleep mode of PID control “PID-STP” 45 (1045): Low torque detected “U-TL” 46 (1046): Torque detected 1 “TD1” 47 (1047): Torque detected 2 “TD2” 48 (1048): Motor 1 selected “SWM1” 49 (1049): Motor 2 selected “SWM2” 50 (1050): Motor 3 selected “SWM3” 51 (1051): Motor 4 selected “SWM4” 52 (1052): Forward rotation “FRUN” 53 (1053): Reverse rotation “RRUN” 54 (1054): Under remote mode “RMT” 55 (1055): Run command entered *100 “AX2” 56 (1056): Motor overheat detected by thermistor “THM” 57 (1057): Mechanical brake control “BRKS” 58 (1058): Frequency (speed) detected 3 “FDT3” 59 (1059): Terminal [C1] wire break detection “C1OFF” 68 (1068): Motor regular switching early warning *101 “MCHG” 69 (1069): Pump control output limit signal *101 “MLIM” 70 (1070): Speed valid “DNZS” 71 (1071): Speed agreement “DSAG” 72 (1072): Frequency (speed) arrival 3 “FAR3” 76 (1076): Speed mismatch error detected “PG-ERR” 77 (1077): Low DC link bus voltage detection “U-EDC” 79 (1079): During decelerating at momentary power failure “IPF2” 82 (1082): Positioning complete “PSET” 84 (1084): Maintenance timer counted up “MNT” 87 (1087): Frequency arrival and detected “FARFDT” 88 (1088): Auxiliary motor drive signal *101 “AUX_L” 89 (1089): Magnetic pole position detection complete signal “PTD” 90 (1090): Alarm content 1 “AL1” 91 (1091): Alarm content 2 “AL2” 92 (1092): Alarm content 4 “AL4” 93 (1093): Alarm content 8 “AL8” 95 (1095): Forced operation “FMRUN” 98 (1098): Warning “L-ALM” 99 (1099): Alarm output “ALM” 100 : No assignment “NONE” 101 (1101): EN circuit failure detected “DECF” 102 (1102): EN terminal input OFF “ENOFF” 105 (1105): Braking transistor broken “DBAL” 125 (1125): Watt-hour pulse output “POUT” 131 (1131): Speed limiting “S-LIM” 132 (1132): Torque limiting “T-LIM” 133 (1133): Low current detection “IDL2” 135 (1135): Dancer upper limit position warning signal “D-UPFL” 136 (1136): Dancer lower limit position warning signal “D-DNFL” 137 (1137): Dancer position limit warning signal “D-FL” 151 (1151): Overtravel detection “OT-OUT” 152 (1152): Forced stop detection “STOP-OUT” 153 (1153): Pass point detection 1 “PPAS1” 154 (1154): Pass point detection 2 “PPAS2” 158 (1158): Overload detection “LLIM” 159 (1159): Performing light load automatic double speed operation “LAC”	N	Y	100	

Function code	Name	Control method and Data setting range	Change when running	Data copying	Factory default	Related page
		160 (1160): Motor 1 being driven with inverter *101 “M1_I” 161 (1161): Motor 1 being driven by commercial power *101 “M1_L” 162 (1162): Motor 2 being driven with inverter *101 “M2_I” 163 (1163): Motor 2 being driven by commercial power *101 “M2_L” 164 (1164): Motor 3 being driven with inverter *101 “M3_I” 165 (1165): Motor 3 being driven by commercial power *101 “M3_L” 166 (1166): Motor 4 being driven with inverter *101 “M4_I” 167 (1167): Motor 4 being driven by commercial power *101 “M4_L” 169 (1169): Motor 5 being driven by commercial power *101 “M5_L” 171 (1171): Motor 6 being driven by commercial power *101 “M6_L” 173 (1173): Motor 7 being driven by commercial power *101 “M7_L” 175 (1175): Motor 8 being driven by commercial power *101 “M8_L” 176 (1176): For adjustment by manufacturer *101 “COM_ABN” 177 (1177): For adjustment by manufacturer *101 “COM_DO” 180 (1180): In mutual operation *101 “M-RUN” 181 (1181): Alarm in mutual operation *101 “M-ALM” 190 (1190): Under scheduled operation *101 “TMD” 191 (1191): Schedule 1 enabled *101 “TMD1” 192 (1192): Schedule 2 enabled *101 “TMD2” 193 (1193): Schedule 3 enabled *101 “TMD3” 194 (1194): Schedule 4 enabled *101 “TMD4” 200 (1200): Under PID2 control *101 “PID2” 201 (1201): PID1 alarm *101 “PV1-ALM” 202 (1202): PID1 feedback error *101 “PV1-OFF” 203 (1203): PID2 alarm *101 “PV2-ALM” 204 (1204): PID2 feedback error *101 “PV2-OFF” 211 (1211): Under external PID1 control *101 “EPID1-CTL” 212 (1212): External PID1 output *101 “EPID1-OUT” 213 (1213): Running under external PID1 *101 “EPID1-RUN” 214 (1214): External PID1 alarm *101 “EPV1-ALM” 215 (1215): External PID1 feedback error *101 “EPV1-OFF” 221 (1221): Under external PID2 control *101 “EPID2-CTL” 222 (1222): External PID2 output *101 “EPID2-OUT” 223 (1223): Running under external PID2 *101 “EPID2-RUN” 224 (1224): External PID2 alarm *101 “EPV2-ALM” 225 (1225): External PID2 feedback error *101 “EPV2-OFF” 231 (1231): Under external PID3 control *101 “EPID3-CTL” 232 (1232): External PID3 output *101 “EPID3-OUT” 233 (1233): Running under external PID3 *101 “EPID3-RUN” 234 (1234): External PID3 alarm *101 “EPV3-ALM” 235 (1235): External PID3 feedback error *101 “EPV3-OFF” 251 (1251): M/Shift key ON/OFF status “MTGL” 2001 to 2260 (3001 to 3260): Customizable logic step output 1 to 260 SO01” to “SO260” 4001(5001): Terminal [X1] input “X1” 4002(5002): Terminal [X2] input “X2” 4003(5003): Terminal [X3] input “X3” 4004(5004): Terminal [X4] input “X4” 4005(5005): Terminal [X5] input “X5” 4006(5006): Terminal [X6] input “X6” 4007(5007): Terminal [X7] input “X7” 4008(5008): Terminal [X8] input “X8” 4009(5009): Terminal [X9] input “X9” 4010(5010): Terminal [FWD] input “FWD” 4011(5011): Terminal [REV] input “REV” 4021(5021): Terminal [I1] input “I1” 4022(5022): Terminal [I2] input “I2” 4023(5023): Terminal [I3] input “I3” 4024(5024): Terminal [I4] input “I4” 4025(5025): Terminal [I5] input “I5” 4026(5026): Terminal [I6] input “I6” 4027(5027): Terminal [I7] input “I7” 4028(5028): Terminal [I8] input “I8” 4029(5029): Terminal [I9] input “I9” 4030(5030): Terminal [I10] input “I10” 4031(5031): Terminal [I11] input “I11” 4032(5032): Terminal [I12] input “I12” 4033(5033): Terminal [I13] input “I13” 4034(5034): Terminal [I14] input “I14” 4035(5035): Terminal [I15] input “I15” 4036(5036): Terminal [I16] input “I16” 4041(5041): Terminal [CLI1] input “CLI1” 4042(5042): Terminal [CLI2] input “CLI2” 4043(5043): Terminal [CLI3] input “CLI3” 4044(5044): Terminal [CLI4] input “CLI4” 4045(5045): Terminal [CLI5] input “CLI5” 4046(5046): Terminal [CLI6] input “CLI6” 4047(5047): Terminal [CLI7] input “CLI7” 4048(5048): Terminal [CLI8] input “CLI8” 4049(5049): Terminal [CLI9] input “CLI9” 4081(5081): Key RUN/FWD input “KP-RUN/KP-FWD” 4082(5082): Key REV input “KP-REV” 4083(5083): Key STOP input “KP-STOP” 4084(5084): Key UP input “KP-UP” 4085(5085): Key DOWN input “KP-DOWN” 4088(5088): Key M/SHIFT input “KP-M/SHIFT” 4091(5091): Key RESET input “KP-RESET” 4101(5101): Terminal [X1] input (terminal block only) “X1-TERM” 4102(5102): Terminal [X2] input (terminal block only) “X2-TERM” 4103(5103): Terminal [X3] input (terminal block only) “X3-TERM” 4104(5104): Terminal [X4] input (terminal block only) “X4-TERM” 4105(5105): Terminal [X5] input (terminal block only) “X5-TERM” 4106(5106): Terminal [X6] input (terminal block only) “X6-TERM”				5-515

Function code	Name	Control method and Data setting range	Change when running	Data copying	Factory default	Related page
		4107(5107): Terminal [X7] input (terminal block only) "X7-TERM" 4108(5108): Terminal [X8] input (terminal block only) "X8-TERM" 4109(5109): Terminal [X9] input (terminal block only) "X9-TERM" 4110(5110): Terminal [FWD] input (terminal block only) "FWD-TERM" 4111(5111): Terminal [REV] input (terminal block only) "REV-TERM" 6000 (7000): Final run command RUN "FL_RUN" 6001 (7001): Final run command FWD "FL_FWD" 6002 (7002): Final run command REV "FL_REV" 6003 (7003): Accelerating "DACC" 6004 (7004): Decelerating "DDEC" 6005 (7005): Under anti-regenerative control "REGA" 6006 (7006): Within dancer reference position "DR_REF" 6007 (7007): With/without alarm factor "ALM_ACT" 6100: TRUE (1) fixed input "TRUE" 6101: FALSE (0) fixed input "TRUE" * Inside the ( ) is the negative logic signal. (OFF at short-circuit). [Analog] 8000: Output frequency 1 (before slip compensation) 8001: Output frequency 2 (after slip compensation) 8002: Output current 8003: Output voltage 8004: Output torque 8005: Load factor 8006: Power consumption 8007: PID feedback value 8008: Actual speed/estimated speed 8009: DC link bus voltage 8013: Motor output 8015: PID command (SV) 8016: PID output (MV) 8017: Master-follower angle deviation 8018: Inverter cooling fin temperature 8021: PG feedback value 8022: Torque current command 8023: PID deviation 8024: Line speed command 8025: Winding diameter calculation value 8026: Setting frequency (before acceleration/deceleration calculation) 8050: PID control 1 feedback amount *101 "PV1" 8051: PID control 1 command *101 "SV1" 8052: PID control 1 deviation *101 "ERR1" 8053: PID control final deviation *101 "ERR" 8054: PID control 2 feedback amount *101 "PV2" 8055: PID control 2 command *101 "SV2" 8056: PID control 2 deviation *101 "ERR2" 8060: External PID control 1 feedback amount *101 "EPID1-PV" 8061: External PID control 1 command *101 "EPID1-SV" 8062: External PID control 1 deviation *101 "EPID1-ERR" 8063: External PID control 1 final deviation *101 "EPID-ERR" 8065: External PID control 1 final output *101 "EPID1-OUT" 8070: External PID control 2 feedback amount *101 "EPID2-PV" 8071: External PID control 2 command *101 "EPID2-SV" 8072: External PID control 2 deviation *101 "EPID2-ERR" 8075: External PID control 2 final output *101 "EPID2-OUT" 8080: External PID control 3 feedback amount *101 "EPID3-PV" 8081: External PID control 3 command 3 *101 "EPID3-SV" 8082: External PID control 3 deviation *101 "EPID3-ERR" 8085: External PID control 3 final output *101 "EPID3-OUT" 9001: Analog terminal [12] input signal "12" 9002: Analog terminal [C1] input signal (C1 function) "C1" 9003: Analog terminal [V2] input signal "V2" 9004: Analog terminal [32] input signal "32" 9005: Analog terminal [C2] input signal "C2" 9006: Temperature detection PT Ch1 *101 "PT1" 9007: Temperature detection PT Ch2 *101 "PT2" 9008: Analog terminal [C1] input signal (V3 function) "V3" 9010: UP/DOWN value "UP/DOWN"				5-515
U04	(Function 1)	-9990 to 0.00 to 9990.0	N	Y	0.00	
U05	(Function 2)		N	Y	0.00	

Customizable logic Step 1 to 14 function code is assigned as follows: Setting value is the same as U01 to U05.

	Step 1	Step 2	Step 3	Step 4	Step 5	Step 6	Step 7	Step 8	Step 9	Step 10
Logic function block	U01	U06	U11	U16	U21	U26	U31	U36	U41	U46
Input 1	U02	U07	U12	U17	U22	U27	U32	U37	U42	U47
Input 2	U03	U08	U13	U18	U23	U28	U33	U38	U43	U48
Function 1	U04	U09	U14	U19	U24	U29	U34	U39	U44	U49
Function 2	U05	U10	U15	U20	U25	U30	U35	U40	U45	U50

	Step 11	Step 12	Step 13	Step 14
Logic function block	U51	U56	U61	U66
Input 1	U52	U57	U62	U67
Input 2	U53	U58	U63	U68
Function 1	U54	U59	U64	U69
Function 2	U55	U60	U65	U70

Function code	Name	Control method and Data setting range	Change when running	Data copying	Factory default	Related page
U71 to U80	Customizable logic (Output selection) Output signal 1 to Output signal 10	0: Invalid 1 to 260: Output of Step 1 to 260 “S001” to “S0260”	N	Y	0	5-515
U81 to U90	Customizable logic (Function selection) Output signal 1 to Output signal10	0 to 172 (1000 to 1172): same as E98, but 19, 80 and 121 to 129 cannot be selected. 241 to 245 (1241 to 1245): User-defined alarm 1 to 5 “CA1” to “CA5” 8001 to 8049: The value with 8000 added to E61	N	Y	100	
U91	Customizable logic: Timer monitor (Step selection)	0: Monitor disable 1 to 260: Step 1 to 260	Y	N	0	
U92	Customizable logic (The coefficients of the approximate formula) (Mantissa of KA1)	-9.999 to 9.999	N	Y	0.000	
U93	(Exponent part of KA1)	-5 to 5	N	Y	0	
U94	(Mantissa of KB1)	-9.999 to 9.999	N	Y	0.000	
U95	(Exponent part of KB1)	-5 to 5	N	Y	0	
U96	(Mantissa of KC1)	-9.999 to 9.999	N	Y	0.000	
U97	(Exponent part of KC1)	-5 to 5	N	Y	0	
U98	Customizable logic Output monitor (Step selection)	0: Monitor disable 1 to 260 : Step 1 to 260			0	5-550
U99	Customizable logic Output monitor (Display unit selection)	Same as J105 (0 cannot be set.)			1	

*100: Supported with ROM0300 or later.

*101: Supported with ROM0500 or later.

[20] U1 codes: Customizable logic Functions (Customizable logic Functions)

Excluding certain exceptions, all control methods (V/f PGV/f SLV PGV PMSLV PMPGV TRQ) in these codes are valid.

Function code	Name	Control method and Data setting range	Change when running	Data copying	Factory default	Related page
U100	Task process cycle setting	0: Auto (Automatic selection from 1, 2, 5, 10, or 20 ms based on number of steps) 1: 1 ms (Up to 10 steps) 2: 2 ms (Up to 20 steps) 5: 5 ms (Up to 50 steps) 10: 10 ms (Up to 100 steps) 20: 20 ms (Up to 260 steps) 127: Multi-task (Multiple cycles can be set up to 20 steps)	N	Y	0	5-515
U101	Customizable logic Operating point 1 (X1)	-999.0 to 0.00 to 9990.0	Y	N	0.00	5-515 5-551
U102	Operating point 1 (Y1)					
U103	Operating point 2 (X2)					
U104	Operating point 2 (Y2)					
U105	Operating point 3 (X3)					
U106	Operating point 3 (Y3)					
U107	Customizable logic (Auto calculation of the coefficients of the approximate formula)	0: Invalid 1: Calculation execution (Calculation 1)	N	N	0	
U121 to U170	Customizable logic (User parameter 1) to (User parameter 50)	-9990 to 0.00 to 9990.0	Y	Y	0.00	5-515
U171 to U180	Customizable logic (Storage area 1) to (Storage area 10)	-9990 to 0.00 to 9990.0	Y	Y	0.00	
U181	Customizable logic Output signal 11 (Output selection)	0 (Disable): 1 to 260: Output of Step 1 to 260 “S001” to “S0260”	N	Y	0	
U182	Output signal 12 (Output selection)					
U183	Output signal 13 (Output selection)					
U184	Output signal 14 (Output selection)					
U185	Customizable logic Output signal 11 (Function selection)	0 to 172 (1000 to 1172): same as E98, but 19 and 80 cannot be selected. 241 to 245 (1241 to 1245): User-defined alarm 1 to 5 “CA1” to “CA5” 8001 to 8049: The value with 8000 added to E61	N	Y	100	
U186	Output signal 12 (Function selection)					
U187	Output signal 13 (Function selection)					
U188	Output signal 14 (Function selection)					
U190	Customizable logic Step setting (Step number)	1 to 260	Y	N	15	
U191	(Block selection)	Same as U01	N	N	0	
U192	(input 1)	Same as U02	N	N	100	
U193	(input 2)	Same as U03	N	N	100	
U194	(Function 1)	Same as U04	N	N	0.00	
U195	(Function 2)	Same as U05	N	N	0.00	
U196	Customizable logic ROM version 4 higher order digits (for manufacturer)	0 to 9999	N	N	0	-
U197	(for user)	0 to 9999	N	Y	0	-
U198	Customizable logic ROM version 4 lower order digits (for manufacturer)	0 to 9999	N	N	0	-
U199	(for user)	0 to 9999	N	Y	0	-

[21] y codes: LINK Functions (Link functions)

Excluding certain exceptions, all control methods (V/f PGV/f SLV PGV PMSLV PMPGV TRQ) in these codes are valid.

Function code	Name	Control method and Data setting range	Change when running	Data copying	Factory default	Related page
y01	RS-485 Communication 1 (station address)	0(1) to 255 0: Used with BACnet MS/TP *101	N	Y	1	5-556
y02	(Communications error processing)	0: Immediately trip with alarm Err8 1: Trip with alarm Err8 after running for the period specified by timer y03 2: Retry during the period specified by timer y03. If the retry fails, trip with alarm Err8. If it succeeds, continue to run. 3: Continue to run	Y	Y	0	
y03	(Timer)	0.0 to 60.0 s	Y	Y	2.0	
y04	(Baud rate)	0: 2400 bps 1: 4800 bps 2: 9600 bps 3: 19200 bps 4: 38400 bps 5: 57600 bps 6: 76800 bps 7: 115200 bps	Y	Y	3	
y05	(Data length selection)	0: 8 bits 1: 7 bits	Y	Y	0	
y06	(Parity selection)	0: None (Stop bit: 2 bits) 1: Even number parity (Stop bit: 1 bit) 2: Odd number parity (Stop bit: 1 bit) 3: None (Stop bit: 1 bit)	Y	Y	0	
y07	(Stop bit selection)	0: 2 bits 1: 1 bit	Y	Y	0	
y08	(Communication time-out detection time)	0: No detection, 1 to 60 s	Y	Y	0	
y09	(Response interval time)	0.00 to 1.00 s	Y	Y	0.01	
y10	(Protocol selection)	0: Modbus RTU protocol 1: Reserved 2: Fuji general-purpose inverter protocol 3: Metasys N2 protocol *101 5: BACnet protocol *101	Y	Y	0	
y11	RS-485 Communication 2 (station address)	Same as y01	N	Y	1	
y12	(Communications error processing)	0: Immediately trip with alarm ErP 1: Trip with alarm ErP after running for the period specified by timer y13 2: Retry during the period specified by timer y13. If the retry fails, trip with alarm ErP. If it succeeds, continue to run. 3: Continue to run	Y	Y	0	
y13	(Timer)	Same as y03	Y	Y	2.0	
y14	(Baud rate)	Same as y04	Y	Y	3	
y15	(Data length selection)	Same as y05	Y	Y	0	
y16	(Parity selection)	Same as y06	Y	Y	0	
y17	(Stop bit selection)	Same as y07	Y	Y	0	
y18	(Communication time-out detection timer)	Same as y08	Y	Y	0	
y19	(Response interval time)	Same as y09	Y	Y	0.01	
y20	(Protocol selection)	0: Modbus RTU protocol 1: Reserved 2: Fuji general-purpose inverter protocol 3: Metasys N2 protocol *101 5: BACnet protocol *101 50: Communications link pump control protocol *101	Y	Y	0	
y60	BACnet MS/TP Device Instance (Upper)	0 to 4194 *101	N	Y	37	5-559
y61	(Lower)	0: y01 or y11 (according to Channel) *101 128 to 999	N	Y	0	
y62	BACnet Network Number (Ch1)	0 to 65534 *101	Y	Y	0	5-559
y63	(Ch2)		Y	Y	0	
y85	(For adjustment by manufacturer) *9	0000 to FFFF (in hexadecimal)	Y	Y	0000	5-559
y86						
y87						
y88						
y93	RTU current format switching	0: Format 24 1: Format 19	Y	Y	0	5-560
y94	Link function (Terminal [X] operation selection)	0: Disable 1: Enable	Y	Y	0	5-561

Function code	Name	Control method and Data setting range	Change when running	Data copying	Factory default	Related page
y95	Data clear processing for communication error	0: Do not clear data when a communication error alarm occurs. (Compatible with conventional inverters) 1: Clear the data of function codes S01/S05/S19 when a communications error occurs. 2: Clear the run command assigned bit of function code S06 when a communications error occurs. 3: Clear both data 1 and 2 above. 4: Clear both data of S01/S05/S19 and run command assigned bit of S06 when a communications error occurs. Also clears the data of S02/S03/S13/S15/S20/S21. *100 * Applicable alarms: Er8 ErP Er4 Er5	Y	Y	0	5-561
y96	Communication compatibility mode	0: Disable 1: Reserved 2: Enable (G1 compatible) 3: Enable (GX1 compatible) 4: Enable (F1 compatible) *100	Y	Y	0	5-562
y97	Communication data storage selection	0: Store in nonvolatile memory (Rewritable times are limited) 1: Write in temporary memory (Rewritable times are unlimited) 2: Save all data from temporary memory to nonvolatile memory (After all save, return to Data 1)	Y	Y	0	5-563
y98	Bus function (Operation selection)	**Frequency setting/torque command** / **Run command** 0: Based on H30 / Based on H30 1: Bus link / Based on H30 2: Based on H30 / Command from bus 3: Command from bus / Command from bus	Y	Y	0	5-563
y99	Support link function (Operation selection)	**Frequency setting** / **Run command** 0: Based on H30, y98 / Based on H30, y98 1: Commands from FRENIC-Loader 4 / Based on H30, y98 2: Based on H30, y98 / Commands from FRENIC -Loader 4 3: Commands from FRENIC-Loader 4 / Commands from FRENIC -Loader 4	Y	N	0	5-564

*100: Supported with ROM0300 or later.

*101: Supported with ROM0500 or later.

[22] o codes: Option Functions (Option functions)

Excluding certain exceptions, all control methods (V/f PGV/f SLV PGV PMSLV PMPGV TRQ) in these codes are valid.

Function code	Name	Control method and Data setting range	Change when running	Data copying	Factory default	Related page
o01	OPC-RY2(Option) *101 Extended terminal [Y6A/C]	See o01 to o07 in "Table 5.2-4 Control output terminal setting list table".	N	Y	0	-
o02	[Y7A/C]		N	Y	2	
o03	[Y8A/C]		N	Y	1	
o04	[Y9A/C]		N	Y	3	
o05	[Y10A/C]		N	Y	5	
o06	[Y11A/C]		N	Y	6	
o07	[Y12A/C]		N	Y	100	
o09	OPC-PT(Option) *101 (Display Unit)	60: K 61: Degree C 62: Degree F	N	Y	61	
o10	(Sensor type)	0: JPt100 (JIS C1604) 1: Pt100 (JIS C1604 / IEC 60751) 2: Ni100 (DIN 43760) 3: Pt1000 (IEC 60751) 4: Ni1000 (DIN 43760)	N	Y	0	
o11	(Function selection)	0: None 5: PID feedback value 30: PID feedback value 2 42: External PID 1 feedback value 45: External PID 2 feedback value 48: External PID 3 feedback value	N	Y	0	
o12	(Filter time constant)	0.0 to 100.0	Y	Y	1.0	
o15	(Sensor type)	Same as o10	N	Y	0	
o16	(Function selection)	Same as o11	N	Y	0	
o17	(Filter time constant)	Same as o12	Y	Y	1.0	
o19	OPC-DI(Option) *101 (DI polarity selection)	0: Frequency setting (without polarity) 1: Frequency setting (with polarity) * This is valid only when o20 = 0, 1.	N	Y	0	
o20	(DI mode selection)	0: 8-bit binary frequency setting 1: 12-bit binary frequency setting 2: 15-bit binary frequency setting 3: 16-bit binary frequency setting 4: BCD 4-digit frequency setting 0.00 to 99.99 Hz 5: BCD 4-digit frequency setting 0.0 to 599.9 Hz 99: General-purpose DI function (I1 to I16)	N	Y	0	
o21	OPC-DO(Option) *101 (DO mode selection)	0: Output frequency 1 (before slip compensation) 1: Output frequency 2 (after slip compensation) 2: Output current 3: Output voltage 4: Output torque 5: Load factor 6: Power consumption 7: PID feedback value 8: Actual speed/estimated speed value 9: DC intermediate circuit voltage 13: Motor output 15: PID command (SV) 16: PID output (MV) 17: Master-follower angle deviation 18: Inverter cooling fin temperature *100 21: PG feedback value *100 22: Torque current command value *100 23: PID deviation *100 24: Line speed command *100 25: Winding diameter calculation value *100 26: Set frequency (before acceleration/deceleration calculation) *100 50: PID control 1 feedback amount (PV1) *101 51: PID control 1 command (SV1) *101 52: PID control 1 deviation (ERR1) *101 54: PID control 2 feedback amount (PV2) *101 55: PID control 2 command (SV2) *101 56: PID control 2 deviation (ERR2) *101 60: External PID control 1 feedback amount (EPID1-PV) *101 61: External PID control 1 command (EPID1-SV) *101 62: External PID control 1 deviation (EPID1-ERR) *101 63: External PID control 1 final deviation (EPID-ERR) *101 65: External PID control 1 final output (EPID1-OUT) *101 70: External PID control 2 feedback amount (EPID2-PV) *101 71: External PID control 2 command (EPID2-SV) *101 72: External PID control 2 deviation (EPID2-ERR) *101 75: External PID control 2 final output (EPID2-OUT) *101 80: External PID control 3 feedback amount (EPID3-PV) *101 81: External PID control 3 command 3 (EPID3-SV) *101 82: External PID control 3 deviation (EPID3-ERR) *101 85: External PID control 3 final output (EPID3-OUT) *101 99: Individual signal output	Y	Y	0	

Function code	Name	Control method and Data setting range	Change when running	Data copying	Factory default	Related page
o22	OPC-RY(Option) *101 (Mode selection)	0: Output linked to terminal [Y1] to [Y4] functions (G1 compatible) 1: Individual signal output (set with o23 to o26)	N	Y	0	-
o23	Terminal [Y1A/B/C] (Ry output)	See o23 to o26 in "Table 5.2-4 Control output terminal setting list table".	N	Y	0	
o24	Terminal [Y2A/B/C] (Ry output)		N	Y	1	
o25	Terminal [Y3A/B/C] (Ry output)		N	Y	2	
o26	Terminal [Y4A/B/C] (Ry output)		N	Y	7	
o27	Transmission error (Operation selection)	0: Immediate Er5 trip when communication error occurs. 1: Immediate Er5 trip after running for time specified with timer after communication error occurs. 2: Immediate Er5 trip if communication error occurs, and communication does not recover after retry while running for time specified with timer 3: Motor continues to run without Er5 trip even if communication error occurs. Motor runs in accordance with communication command after communication recovers. 4 to 9: Same as o27 = 0 10: Er5 trip following deceleration stop due to communication error. 11: Er5 trip following deceleration stop after running for time specified with timer after communication error occurs 12: Deceleration stop if communication error occurs, and communication does not recover after retry while running for time specified with timer. Motor continues to run in accordance with communication command if communication recovers. [When combined with DeviceNet option] 13: Run command immediately turned OFF when communication error occurs. (Er5 does not occur.) 14: Forced forward rotation operation when communication error occurs. (Er5 does not occur.) 15: Forced reverse rotation operation when communication error occurs. (Er5 does not occur.) [When combined with other options] 13 to 15: Same as o27 = 3	Y	Y	0	
o28	(Timer time)	0.0 to 60.0	Y	Y	0.0	
o30 to o39	Bus setting parameter 01 to Bus setting parameter 10	0 to 255 The function for each function code differs based on the bus option type. Refer to the respective bus option instruction manuals for details.	N	Y	0	
o40 to o47	Write function code assignment 1 to Write function code assignment 8	0000 to FFFF (in hexadecimal) Data mapped I/O (Write) The existence of support, and the number items supported differs depending on the bus option type. Refer to the respective bus option instruction manuals for details on the data setting method.	N	Y	h.0000	
o48 to o59	Read function code assignment 1 to Read function code assignment 12	0000 to FFFF (in hexadecimal) Data mapped I/O (Read) The existence of support, and the number items supported differs depending on the bus option type. Refer to the respective bus option instruction manuals for details on the data setting method.	N	Y	h.0000	
o60	OPC-AIO(Option) Terminal [32] (Function selection)	Same as E61	N	Y	0	
o61	(Offset adjustment)	-5.0 to 5.0 %	Y*	Y	0.0	
o62	(Gain adjustment)	0.00 to 400.00 %	Y*	Y	100.00	
o63	(Filter setting)	0.00 to 5.00 s	Y	Y	0.05	
o64	(Gain reference point)	0.00 to 100.00 %	Y*	Y	100.00	
o65	(Polarity selection)	0: Bipolar 1: Unipolar	N	Y	1	
o66	(Bias)	-200.0 to 200.00 %	Y*	Y	0.00	
o67	(Bias reference point)	0.00 to 100.00 %	Y*	Y	0.00	
o69	(Display unit)	Same as J105 (0 cannot be set.)	N	Y	2	
o70	(Maximum scale)	-999.0 to 0.00 to 9990.0	N	Y	100.00	
o71	(Minimum scale)	-999.0 to 0.00 to 9990.0	N	Y	0.00	

Function code	Name	Control method and Data setting range	Change when running	Data copying	Factory default	Related page
o75	OPC-AIO(Option) Terminal [C2] (Range selection)	0: 4 to 20 mA Unipolar 1: 0 to 20 mA Unipolar 10: 4 to 20 mA Bipolar 11: 0 to 20 mA Bipolar	N	Y	0	-
o76	(Function selection)	Same as E61	N	Y	0	
o77	(Offset adjustment)	-5.0 to 5.0 %	Y*	Y	0.0	
o78	(Gain adjustment)	0.00 to 400.00 %	Y*	Y	100.00	
o79	(Filter setting)	0.00 to 5.00 s	Y	Y	0.05	
o81	(Gain reference point)	0.00 to 100.00 %	Y*	Y	100.00	
o82	(Bias)	-200.0 to 200.00 %	Y*	Y	0.00	
o83	(Bias reference point)	0.00 to 100.00 %	Y*	Y	0.00	
o85	(Display unit)	Same as J105 (0 cannot be set.)	N	Y	2	
o86	(Maximum scale)	-999.0 to 0.00 to 9990.0	N	Y	100.00	
o87	(Minimum scale)	-999.0 to 0.00 to 9990.0	N	Y	0.00	
o88	OPC-AIO(Option) C1OFF signal (Operation selection)	0: Signal ON following terminal [C1] wire break 1: Signal ON following terminal [C2] wire break 2: Signal ON following terminal [C1] or [C2] wire break	N	Y	2	
o90	OPC-AIO(Option) Terminal [Ao] / [CS2] (Function selection)	Same as F31	Y	Y	0	
o91	(Output gain)	0 to 300 %	Y*	Y	100	
o93	OPC-AIO(Option) Terminal [Ao] (Polarity selection)	0: Bipolar 1: Unipolar	N	Y	1	
o96	OPC-AIO(Option) Terminal [CS] / [CS1] (Function selection)	Same as F31	Y	Y	0	
o97	(Output gain)	0 to 300 %	Y*	Y	100	

*100: Supported with ROM0300 or later.

*101: Supported with ROM0500 or later.

[23] o1 codes: Option Functions (Option functions)

Excluding certain exceptions, all control methods (V/f PGV/f SLV PGV PMSLV PMPGV TRQ) in these codes are valid.

Function code	Name	Control method and Data setting range	Change when running	Data copying	Factory default	Related page
o101 to o116	OPC-DI(Option) Terminal [I1] (Function selection) to Terminal [I16] (Function selection)	See o101 to o116 in “Table 5.2-3 Control input terminal setting list table”.	N	Y	100	-
o121	OPC-DI(Option) Terminal [O1] (Function selection)	See o121 to o128 in “Table 5.2-4 Control output terminal setting list table”.	N	Y	0	
o122	Terminal [O2] (Function selection)		N	Y	2	
o123	Terminal [O3] (Function selection)		N	Y	1	
o124	Terminal [O4] (Function selection)		N	Y	3	
o125	Terminal [O5] (Function selection)		N	Y	5	
o126	Terminal [O6] (Function selection)		N	Y	6	
o127	Terminal [O7] (Function selection)		N	Y	100	
o128	Terminal [O8] (Function selection)		N	Y	100	
o170	For adjustment by manufacturer *101	0 to 2	N	Y	0	
o171		-180 to 179 deg	Y	Y	0	
o172		-180 to 179 deg	Y	Y	0	
o173		0.00 to 10.00 Hz	Y	Y	1.00	
o174		0.1 to 5.0 Hz	Y	Y	0.1	
o175		1 to 5 deg	Y	Y	1	
o176		0.00 to 10.00 Hz	Y	Y	10.00	
o177		0.5 to 10.0 Hz	Y	Y	5.0	
o178		0.001 to 0.250 Hz	Y	Y	0.020	
o179		0.001 to 0.100 s	N	Y	0.010	
o180		0.0 to 100.0 %	Y	Y	80.0	
o181		0.000 to 1.000 s	Y	Y	0.000	
o182		0.000 to 0.100 s	N	Y	0.040	
o183		0 to 1	N	Y	1	
o185		0 to 1	N	Y	0	
o186		0 to 1	N	Y	0	
o187		0.1 to 100.0	Y	Y	0.1	
o188		0.000 to 5.000 s	Y	Y	0.400	
o189		1 to 10 Hz	Y	Y	5	
o190		0.01 to 0.50 s	N	Y	0.10	
o191		0 to 1	N	Y	0	
o192		0.00 to 10.00 s	N	Y	0.00	
o193		0 to 1	Y	Y	0	
o194		0 to 1	N	Y	0	
o195		0.00 to 10.00 %	Y	Y	1.00	

*100: Supported with ROM0300 or later.

*101: Supported with ROM0500 or later.

[24] o2 codes: Option Functions (Option functions)

Excluding certain exceptions, all control methods (V/f PGV/f SLV PGV PMSLV PMPGV TRQ) in these codes are valid.

Function code	Name	Control method and Data setting range	Change when running	Data copying	Factory default	Related page
o201 to o204	IP address setting 1 to IP address setting 4	0 to 255	Y	Y	0	*30 *31
o205	Subnet mask setting 1		Y	Y	255	
o206	Subnet mask setting 2					
o207	Subnet mask setting 3					
o208	Subnet mask setting 4				0	
o209 to o212	Default gateway setting 1 to Default gateway setting 4		Y	Y	0	
o213	IP address setting mode	0: Fixed (set at o201 to o204) 1: Hard switch (set at o201 to o203, and with rotary switch inside OPC-ETM) 2: DHCP (other than PROFINET) 3: DCP (when using PROFINET)	Y	Y	0	
o214	Protocol setting	0: None (invalid) 1: PROFINET-RT 2: EtherNet/IP 3: Modbus TCP *105 4: Reserved *105	Y	Y	0	
o215	KEEP-ALIVE startup time	10 to720s	Y	Y	60	
o216	Monitoring time *105	0.0 to 60.0s	Y	Y	0	
o217	For adjustment by manufacturer	0 to 65535	Y	Y	h.bAC0	
o218	For adjustment by manufacturer	0 to 419	Y	Y	0	
o219	For adjustment by manufacturer	0 to 9999	Y	Y	0	
o221 to o252	Write function code assignment 1 to 32	Sets function code written from master to inverter.	Y	Y	h.0000	
o253 to o284	Read function code assignment 1 to 32	Sets function code read from inverter to master.	Y	Y	h.0000	
o299	Apply Ethernet settings *105	0: Default value 1: Settings for o201 to o284 (*32) are reflected to the network (automatically return to 0)	N	N	0	

*30: o201 to o284 are supported with ROM0300 or later. For details, refer to the OPC-ETM (Option) Instruction Manual.
*31: After setting o201 to o284 (*32), turn OFF the inverter power. Settings will be valid when the power is turned ON again.
By setting o299 to 1 with ROM0700 or later, settings for o201 to o284 (*32) are reflected without having to turn the power OFF.
*32: The setting for o216 is reflected immediately.
*105: Supported with ROM0700 or later. For details, refer to the OPC-ETM (Option) Instruction Manual.

[25] T codes: Timer Functions (Scheduled operations)

These codes are supported with ROM0500 or later.
Furthermore, codes should be set using the multi-function keypad (TP-A2SW ROM5020 or later).
Refer to the Multi-function Keypad (TP-A2SW) Instruction Manual (INR-SI47-2422) fore details on the setting method.
The control methods (V/f PGV/f SLV PGV PM SLV PM PGV TRQ) in these codes are valid.

Function code	Name	Control method and Data setting range	Change when running	Data copying	Factory default	Related page
T01	Schedule 1 Operation (Operating mode)	0: Disable 1: Enable (Run inverter) 2: Enable (Output digital signal) 3: Enable (Run inverter + Output digital signal)	Y	Y	0	5-565 ~ 5-566
T02	(Start time)	Set at the multi-function keypad dedicated scheduled operation menu.	Y	Y	h.0000	
T03	(End time)		Y	Y	h.0000	
T04	(Start day of the week)		Y	Y	h.0000	
T06	Schedule 2 Operation (Operating mode)	Same as T01	Y	Y	0	
T07	(Start time)	Set at the multi-function keypad dedicated scheduled operation menu.	Y	Y	h.0000	
T08	(End time)		Y	Y	h.0000	
T09	(Start day of the week)		Y	Y	h.0000	
T11	Schedule 3 Operation (Operating mode)	Same as T01	Y	Y	0	
T12	(Start time)	Set at the multi-function keypad dedicated scheduled operation menu.	Y	Y	h.0000	
T13	(End time)		Y	Y	h.0000	
T14	(Start day of the week)		Y	Y	h.0000	
T16	Schedule 4 Operation (Operating mode)	Same as T01	Y	Y	0	
T17	(Start time)	Set at the multi-function keypad scheduled operation menu.	Y	Y	h.0000	5-567
T18	(End time)		Y	Y	h.0000	
T19	(Start day of the week)		Y	Y	h.0000	
T51	Schedule Operation (Pause date 1)	Set at the multi-function keypad dedicated scheduled operation menu.	Y	Y	h.2210	
T52	(Pause date 2)		Y	Y	h.2210	
T53	(Pause date 3)		Y	Y	h.2210	
T54	(Pause date 4)		Y	Y	h.2210	
T55	(Pause date 5)		Y	Y	h.2210	
T56	(Pause date 6)		Y	Y	h.2210	
T57	(Pause date 7)		Y	Y	h.2210	
T58	(Pause date 8)		Y	Y	h.2210	
T59	(Pause date 9)		Y	Y	h.2210	
T60	(Pause date 10)		Y	Y	h.2210	
T61	(Pause date 11)		Y	Y	h.2210	
T62	(Pause date 12)		Y	Y	h.2210	
T63	(Pause date 13)		Y	Y	h.2210	
T64	(Pause date 14)		Y	Y	h.2210	
T65	(Pause date 15)		Y	Y	h.2210	
T66	(Pause date 16)		Y	Y	h.2210	
T67	(Pause date 17)		Y	Y	h.2210	
T68	(Pause date 18)		Y	Y	h.2210	
T69	(Pause date 19)		Y	Y	h.2210	
T70	(Pause date 20)		Y	Y	h.2210	

[26] K codes: Keypad functions (Keypad functions)

Excluding certain exceptions, all control methods (V/f PGV/f SLV PGV PMSLV PMPGV TRQ) in these codes are valid.

Function code	Name	Control method and Data setting range	Change when running	Data copying	Factory default	Related page
K01	Multi-function keypad TP-A2SW (Language selection)	0: Japanese 1: English 2: German 3: French 4: Spanish 5: Italian 6: Chinese 7: Korean *104 8: Russian 9: Greek 10: Turkish 11: Polish 12: Czech 13: Swedish 14: Portuguese 15: Dutch 16: Malay 17: Vietnamese 18: Thai 19: Indonesian	Y	Y	1	5-568
K02	(Backlight OFF time)	0: Always OFF 1 to 30 min	Y	Y	5	
K03	(Brightness adjustment)	0 (dark) - 10 (bright)	Y*	Y	5	
K04	(contrast adjustment)	0 (low) - 10 (high)	Y*	Y	5	
K08	(status display)	0: Hide 1: Display full * This setting also applies to the standard keypad (TP-E2) status display selection.	Y*	Y	1	5-569
K15	(Monitor display selection)	0: Operation guide display 1: Bar graph display	Y	Y	0	
K16	(Sub-monitor 1 display contents)	1: Output frequency 1 (before slip compensation) 2: Output frequency 2 (after slip compensation) 3: Set frequency 4: Motor speed 5: Load shaft speed 6: Feed speed (Line speed) 7: Constant feeding rate time 8: Speed (%) 9: Line speed set value 10: Line speed output value 13: Output current 14: Output voltage 18: Calculated motor output torque 19: Power consumption 20: PID process command 22: PID feedback value 23: Timer value 24: PID output 25: Load factor 26: Motor output 27: Analog signal input monitor 31: Current position 32: Positioning deviation 33: Torque current (%) 34: Magnetic flux command (%) 35: Input watt-hour 36: Winding diameter 37: Position control start position 38: Stop target position 39: PID deviation 40: Torque bias 41: Estimated inertia acceleration/deceleration time conversion value *101 42: Customizable logic output 53: PID 1 command in physical quantity *101 54: PID 1 feedback amount in physical quantity *101 55: PID 2 command in physical quantity *101 56: PID 2 feedback amount in physical quantity *101 60: External PID 1 command (final) in physical quantity *101 61: External PID 1 feedback amount (final) in physical quantity *101 62: External PID 1 output in % *101 63: External PID 1 manual command in % *101 64: External PID 1 command in physical quantity *101 65: External PID 1 feedback amount in physical quantity *101 70: External PID 2 command in physical quantity *101 71: External PID 2 feedback amount in physical quantity *101 72: External PID 2 output in % *101 73: External PID 2 manual command in % *101 80: External PID 3 command in physical quantity *101 81: External PID 3 feedback amount in physical quantity *101 82: External PID 3 output in % *101 83: External PID 3 manual command in % *101	Y	Y	13	5-570

Function code	Name	Control method and Data setting range	Change when running	Data copying	Factory default	Related page
K17	(Sub-monitor 2 display contents)	Same as K16	Y	Y	18	5-570
K20	(Bar graph 1 display contents)	1 to 26 1: Output frequency 1 (before slip compensation) 13: Output current 14: Output voltage 18: Calculated motor output torque 19: Power consumption 25: Load factor 26: Motor output	Y	Y	1	
K21	(Bar graph 2 display contents)		Y	Y	13	
K22	(Bar graph 3 display contents)		Y	Y	18	
K25	Display Unit for Load speed *101	1: non 4: r/min 10: mm/s 11: mm/m 12: mm/h 13: m/s 14: m/min 15: m/h 16: FPS 17: FPM 18: FPH 19: SPM 20: m3/s 21: m3/min 22: m3/h 23: L/s 24: L/min 25: L/h 26: GPS 27: GPM 28: GPH 29: CFS 30: CFM 31: CFH 32: kg/s 33: kg/m 34: kg/h 35: lb/s 36: lb/m 37: lb/h 38: AF/Y The units for the load speed can be displayed when a multi-function keypad (TP-A2SW) is used.	Y	Y	4	5-570
K31	Display Unit for Input Watt-hour Data *101	0: kWh 1: MWh	Y	Y	0	
K33	Long-term Input Watt-hour Data Monitor *101	0(OFF): Cancel or reset 1: Hourly 2: Daily 3: Weekly 4: Monthly	Y	Y	0	
K40	For adjustment by manufacturer	0 to 7	Y	Y	0	5-571

Function code	Name	Control method and Data setting range	Change when running	Data copying	Factory default	Related page
K51	Traceback (Permit/prohibit data overwriting)	0: Permit 1: Prohibit	Y	Y	0	5-571
K52	(Sampling cycle)	0: 1 ms 1: 2 ms 2: 5 ms 3: 10 ms 4: 20 ms 5: 50 ms 6: 100ms 7: 200 ms 8: 500 us	Y	Y	0	
K53	(CH4 operation selection)	0: Analog signal 1: Digital signal	Y	Y	0	
K54	(Analog Ch1 source selection)	0000 to FFFF (hexadecimal format)	Y	Y	h.2907	
K55	(Analog Ch2 source selection)				h.290B	
K56	(Analog Ch3 source selection)				h.0815	
K57	(Analog Ch4 source selection)				h.FFFF	
K58	(Digital Ch1 source selection)	0000 to 00FF (hexadecimal format)	Y	Y	h.0080	
K59	(Digital Ch2 source selection)				h.0081	
K60	(Digital Ch3 source selection)				h.0082	
K61	(Digital Ch4 source selection)				h.0083	
K62	(Digital Ch5 source selection)				h.0084	
K63	(Digital Ch6 source selection)				h.00FF	
K64	(Digital Ch7 source selection)				h.00FF	
K65	Digital Ch8 source selection)				h.00FF	
K90	Application Select *101,*104	0: All Function 1: General 2: HAVC 3: Pump * Application select can only be set with the multi function keypad TP-A2SW.	Y	N	0	5-573
K91	Multi function keypad TP-A2SW (< key shortcut selection)	0: Disable 11 to 99: Respective mode	Y	Y	0	5-574
K92	(> key shortcut selection)		Y	Y	64	
K96	TP-G1 compatibility mode	0: G1 1: GX1 2: F1 *100	Y		0	5-575

*100: Supported with ROM0300 or later.
*101: Supported with ROM0500 or later.
*104: Supported with multi-function keypad (TP-A2SW) ROM5020 or later.
The display is in English on keypads prior to support.

Table 5.2-1 Factory default settings by inverter capacity

Fuji premium efficiency motors (if “5” is set for motor 1 to 4 selection P99/A39/b39/r39)

Motor capacity [kW]	Torque boost 1 to 4 F09/A05/b05/r05 *20	Restart mode after momentary power failure H13	Motor capacity [kW]	Torque boost 1 to 4 F09/A05/b05/r05 *20	Restart mode after momentary power failure (restart timer) H13
0.4	7.1	0.5	55	0.0	1.5
0.75	3.8		75		
1.5	3.0		90		
2.2	2.5		110		
3.7	2.4		132		2.0
5.5	1.9		160		
7.5	1, 8		200		2.5
11	1.3	1.0	220		
15	1.2		280		
18.5	0.9		315		4.0
22	0.9		355		
30	0.0		400		5.0
37			500		
45		1.5	630		

Fuji standard motors, 8-series (if “5” is set for motor 1 to 4 selection P99/A39/b39/r39)

Motor capacity [kW]	Torque boost 1 to 4 F09/A05/b05/r05 *20	Restart mode after momentary power failure H13	Motor capacity [kW]	Torque boost 1 to 4 F09/A05/b05/r05 *20				Restart mode after momentary power failure H13
				HHD	HND	HD	ND	
0.4	7.1	0.5	55	0.0				1.5
0.75	6.8		75					
1.5			90					
2.2			110					
3.7	5.5		132					2.0
5.5	4.9		160					
7.5	4.4		200					2.5
11	3.5	1.0	220					
15	2.8		280					
18.5	2.2		315					4.0
22			355					
30	0.0		400					5.0
37			500					
45		1.5	630					

*20 By changing the inverter specification (F80) between HHD/HND/HD/ND or initializing data (H03 = 2 to 5: motor constant initialization) after changing the motor capacity (P02/A16/b16/r16), torque boost (F09/A05/b05/r05) is rewritten to the relevant value based on the motor capacity (P02/A16/b16/r16) setting value.

Table 5.2-2 Motor constants

When Fuji standard motor 8-series, or other motors are selected by motor selection (Function code P99/A39/b39/r39 = 0 or 4)

■ **Three-phase 200V series**

Motor rated capacity setting range (kW) P02/A16 b16/r16	Applicable motor capacity (kW)	Rated current (A) P03/A17 b17/r17	No-load Current (A) P06/A20 b20/r20	%R1 (%) P07/A21 b21/r21	%X (%) P08/A22 b22/r22	Rated slip P12/A26 b26/r26	Iron loss factor 1 P13/A27 b27/r27	Magnetic saturation factor 1 P16/A30 b30/r30	Magnetic saturation factor 2 P17/A31 b31/r31	Magnetic saturation factor 3 P18/A32 b32/r32	Magnetic saturation factor 4 P19/A33 b33/r33	Magnetic saturation factor 5 P20/A34 b34/r34	Magnetic saturation expansion coefficient a P21/A35 b35/r35	Magnetic saturation expansion coefficient b P22/A36 b36/r36	Magnetic saturation expansion coefficient c P23/A37 b37/r37	Torque current for vector control P55/A55 b55/r55	Induced voltage factor for vector control P56/A56 b56/r56	For adjustment by manufacturer P57/A57 b57/r57	Starting characteristic (Auto search delay time 2) H46
0.01-0 09	0.06	0.44	0.4	13.79	11.75	1.77	14	93.8	87.5	75	62.5	50	106.3	112.5	118.8	0.2		0.027	
0.10-0 19	0.1	0.68	0.55	12.96	12.67	1.77	14	93.3	86.1	74.4	63.6	50.7	108.8	118.7	129.6	0.34		0.024	
0.20-0.39	0.2	1.3	1.06	12.95	12.92	2.33	12.6	89.7	81.9	66.9	54.5	43.3	111.0	129.3	148.4	0.68		0.023	
0.40-0.74	0.4	2.3	1.66	10.2	13.66	2.4	9.88	88.7	81.3	67	55.2	43.8	112.1	126.5	144.3	1.36		0.027	0.5
0.75-1.49	0.75	3, 6	2.3	8.67	10.76	2.33	7.4	88.3	77.7	62.6	51.8	41.1	112.4	129.2	148.4	2.55		0.033	
1.50-2.19	1.5	6.1	3.01	6.55	11.21	2	5.85	92.1	82.8	71.1	58.1	46.2	111.4	126.1	143.9	5.09		0.061	
2.20-3.69	2.2	9.2	4.85	6.48	10.97	1, 8	5.91	85.1	74.6	61.7	50.3	39.8	115.7	133.5	150.6	7.47		0.051	0.6
3.70-5.49	3.7	15	7.67	5.79	11.25	1.93	5.24	86	76.9	61.3	49.5	39.1	115.6	133.2	154.1	12.57		0.063	0.8
5.50-7.49	5.5	22.5	1 1.00	5.28	14.31	1.4	4.75	88.6	79.2	64.9	52.7	41.8	114.3	133.1	155.6	18.68		0.082	1.0
7.50-10.99	7.5	29	12.5	4.5	14.68	1.57	4.03	87.7	80	67.1	56.1	45.6	111.7	128.4	149.2	25.47		0.095	1.2
11.00-14.99	11	42	17.7	3.78	15.09	1.07	3.92	91.3	83.3	69.9	58	47	114.1	130.2	147.9	37.36	85	0.133	1.3
15.00-18.49	15	55	20	3.25	16.37	1.13	3.32	90.5	83.5	72.1	60.7	49.5	109	121.3	137.8	50.94		0.151	
18.50-21.99	18.5	67	21.40	2.92	16.58	0.87	3.34	90.7	83	70.7	59.9	48.7	112.1	127.9	147.5	62.83		0.22	2.0
22.00-29.99	22	78	25.1	2, 7	16	0.9	3.28	89.7	81.3	68.9	59.1	48.4	114.1	130.2	151.8	74.72		0.228	
30.00-36.99	30	107	38.9	2.64	14.96	0.8	3.1	90.2	81.6	68.7	57.2	45.8	114.8	132.3	153.9	101.9		0.202	2.3
37.00-44.99	37	130	41.50	2.76	16.41	0.8	2.3	88.7	78.9	65.4	54.2	43.4	112.2	126.4	143.6	125.7		0.25	2.5
45.00-54.99	45	156	47.5	2.53	16.16	0.8	2.18	89	79.7	66.8	55.4	44.4	112.3	126	141.8	152.8		0.272	
55.00-74.99	55	190	58.6	2.35	16.2	0.94	2.45	89.2	79.3	64.7	53.6	43.1	117.2	136.2	157.8	186.8		0.267	2.6
75.00-89.99	75	260	83.2	1.98	16.89	0.8	2.33	88.1	78	64.3	54.2	42.9	114.9	129.8	144.6	254.7		0.292	2.8
90.00-109.9	90	310	99.2	1.73	16.03	0.8	2.31	88.8	79	65	54	44	115	130	145	305.7		0.31	3.2
110.0 to	110	376	91.20	1.99	20.86	0.66	1.73	90.5	82.6	70.7	58.7	47.8	112.2	126.1	142.4	373.6		0.378	3.5

■ **Three-phase 400V series**

Motor rated capacity setting range (kW) P02/A16 b16/r16	Applicable motor capacity (kW)	Rated current (A) P03/A17 b17/r17	No-load Current (A) P06/A20 b20/r20	%R1 (%) P07/A21 b21/r21	%X (%) P08/A22 b22/r22	Rated slip P12/A26 b26/r26	Iron loss factor 1 P13/A27 b27/r27	Magnetic saturation factor 1 P16/A30 b30/r30	Magnetic saturation factor 2 P17/A31 b31/r31	Magnetic saturation factor 3 P18/A32 b32/r32	Magnetic saturation factor 4 P19/A33 b33/r33	Magnetic saturation factor 5 P20/A34 b34/r34	Magnetic saturation expansion coefficient a P21/A35 b35/r35	Magnetic saturation expansion coefficient b P22/A36 b36/r36	Magnetic saturation expansion coefficient c P23/A37 b37/r37	Torque current for vector control P55/A55 b55/r55	Induced voltage factor for vector control P56/A56 b56/r56	For adjustment by manufacturer P57/A57 b57/r57	Starting characteristic (Auto search delay time 2) H46
0.01 to 0.09	0.06	0.22	0.20	13.79	11.75	1.77	14.00	93.8	87.5	75.0	62.5	50.0	106.3	112.5	118.8	0.10	85	0.027	0.5
0.10 to 0.19	0.1	0.35	0.27	12.96	12.67	1.77	14.00	93.3	86.1	74.4	63.6	50.7	108.8	118.7	129.6	0.17		0.024	
0.20 to 0.39	0.2	0.65	0.53	12.95	12.92	2.33	12.60	89.7	81.9	66.9	54.5	43.3	111.0	129.3	148.4	0.34		0.023	
0.40 to 0.74	0.4	1.15	0.83	10.20	13.66	2.40	9.88	88.7	81.3	67.0	55.2	43.8	112.1	126.5	144.3	0.68		0.027	
0.75 to 1.49	0.75	1.80	1.15	8.67	10.76	2.33	7.40	88.3	77.7	62.6	51.8	41.1	112.4	129.2	148.4	1.27		0.033	
1.50 to 2.19	1.5	3.10	1.51	6.55	11.21	2.00	5.85	92.1	82.8	71.1	58.1	46.2	111.4	126.1	143.9	2.55		0.061	
2.20 to 3.69	2.2	4.60	2.43	6.48	10.97	1.80	5.91	85.1	74.6	61.7	50.3	39.8	115.7	133.5	150.6	3.74		0.051	0.6
3.70 to 5.49	3.7	7.50	3.84	5.79	11.25	1.93	5.24	86.0	76.9	61.3	49.5	39.1	115.6	133.2	154.1	6.28		0.063	0.8
5.50 to 7.49	5.5	11.50	5.50	5.28	14.31	1.40	4.75	88.6	79.2	64.9	52.7	41.8	114.3	133.1	155.6	9.34		0.082	1.0
7.50 to 10.99	7.5	14.50	6.25	4.50	14.68	1.57	4.03	87.7	80.0	67.1	56.1	45.6	111.7	128.4	149.2	12.74		0.095	1.2
11.00 to 14.99	11	21.00	8.85	3.78	15.09	1.07	3.92	91.3	83.3	69.9	58.0	47.0	114.1	130.2	147.9	18.68		0.133	1.3
15.00 to 18.49	15	27.50	10.00	3.25	16.37	1.13	3.32	90.5	83.5	72.1	60.7	49.5	109.0	121.3	137.8	25.47		0.151	2.0
18.50 to 21.99	18.5	34.00	10.70	2.92	16.58	0.87	3.34	90.7	83.0	70.7	59.9	48.7	112.1	127.9	147.5	31.41		0.22	
22.00 to 29.99	22	39.00	12.60	2.70	16.00	0.90	3.28	89.7	81.3	68.9	59.1	48.4	114.1	130.2	151.8	37.36		0.228	
30.00 to 36.99	30	54.00	19.50	2.64	14.96	0.80	3.10	90.2	81.6	68.7	57.2	45.8	114.8	132.3	153.9	50.94		0.202	2.3
37.00 to 44.99	37	65.00	20.80	2.76	16.41	0.80	2.30	88.7	78.9	65.4	54.2	43.4	112.2	126.4	143.6	62.83		0.25	2.5
45.00 to 54.99	45	78.00	23.80	2.53	16.16	0.80	2.18	89.0	79.7	66.8	55.4	44.4	112.3	126.0	141.8	76.41		0.272	
55.00 to 74.99	55	95.00	29.30	2.35	16.20	0.94	2.45	89.2	79.3	64.7	53.6	43.1	117.2	136.2	157.8	93.39		0.267	2.6
75.00 to 89.99	75	130.0	41.60	1.98	16.89	0.80	2.33	88.1	78.0	64.3	54.2	42.9	114.9	129.8	144.6	127.4		0.292	2.8
90.00 to 109.9	90	155.0	49.60	1.73	16.03	0.80	2.31	88.8	79.0	65.0	54.0	44.0	115.0	130.0	145.0	152.8		0.31	3.2
110.0 to 131.9	110	188.0	45.60	1.99	20.86	0.66	1.73	90.5	82.6	70.7	58.7	47.8	112.2	126.1	142.4	186.8		0.378	3.5
132.0 to 159.9	132	224.0	57.60	1.75	18.90	0.66	1.80	90.3	81.9	69.8	57.8	46.6	112.9	127.6	144.8	211.7	90	0.394	4.1
160.0 to 199.9	160	272.0	64.50	1.68	19.73	0.66	1.50	92.2	84.8	71.1	58.6	46.9	114.6	130.5	148.0	256.6		0.482	4.5
200.0 to 219.9	200	335.0	71.50	1.57	20.02	0.66	1.36	91.9	85.5	72.3	60.0	47.6	109.8	122.7	136.4	320.8		0.534	4.7
220.0 to 249.9	220	365.0	71.80	1.60	20.90	0.58	1.25	93.1	86.1	72.9	60.8	48.6	108.7	118.8	130.9	352.8		0.561	
250.0 to 279.9	250	415.0	87.90	1.39	18.88	0.54	1.33	92.2	84.9	72.7	60.5	48.9	109.9	122.2	137.8	400.9		0.571	5.0
280.0 to 314.9	280	462.0	93.70	1.36	19.18		1.27	92.7	85.6	72.9	60.9		109.3	120.2	133.5	449.1		0.589	5.5
315.0 to 354.9	315	520.0	120.0	0.84	16.68	0.45	1.81									505.2		0.862	5.6
355.0 to 399.9	355	580.0	132.0	0.83	16.40	0.43	1.77									569.3		0.891	
400.0 to 449.9	400	670.0	200.0	0.62	15.67	0.29	1.58									641.5		0.683	7.5
450.0 to 499.9	450	770.0	270.0	0.48	13.03	0.23	1.84									721.7		0.694	9.8
500.0 to 559.9	500	835.0		0.51	12.38	0.18	1.80									801.9		1.393	
560.0 to 629.9	560	940.0		0.57	13.94	0.20	1.61									898.1			
630.0 to 709.9	630	1050.0	355.0	0.46	11.77	0.17	1.29									1010		1.395	10.5
710.0 to	710	1150.0	290.0	0.54	14.62	0.21	0.97									1139		1.560	

When Fuji standard motor 6-series is selected by motor selection

(Function code P99/A39/b39/r39 = 3)

■ **Three-phase 200V series**

Motor rated capacity setting range (kW) P02/A16 b16/r16	Applicable motor capacity (kW)	Rated current (A) P03/A17 b17/r17	No-load Current (A) P06/A20 b20/r20	%R1 (%) P07/A21 b21/r21	%X (%) P08/A22 b22/r22	Rated slip P12/A26 b26/r26	Iron loss factor 1 P13/A27 b27/r27	Magnetic saturation factor 1 P16/A30 b30/r30	Magnetic saturation factor 2 P17/A31 b31/r31	Magnetic saturation factor 3 P18/A32 b32/r32	Magnetic saturation factor 4 P19/A33 b 33/r33	Magnetic saturation factor 5 P20/A34 b34/r34	Magnetic saturation expansion coefficient a P21/A35 b35/r35	Magnetic saturation expansion coefficient b P22/A36 b36/r36	Magnetic saturation expansion coefficient c P23/A37 b37/r37	Torque current for vector control P55/A55 b55/r55	Induced voltage factor for vector control P56/A56 b56/r56	For adjustment by manufacturer P57/A57 b57/r57	Starting characteristic (Auto search delay time 2) H46
0.01 to 0 09	0.06	0.44	0.40	13.79	11.75	1.77	14.00	93.8	87.5	75.0	62.5	50.0	106.3	112.5	118.8	0.20		0.027	
0.10 to 0.19	0.1	0.68	0.55	12.96	12.67	1.77	14.00	93.3	86.1	74.4	63.6	50.7	108.8	118.7	129.6	0.34		0.024	
0.20 to 0.39	0.2	1.30	1.00	12.61	13.63	2.33	12.60	90.0	81.3	67.9	56.6	45.0	112.4	126.6	145.1	0.68		0.026	0.5
0.40 to 0.74	0.4	2.30	1.56	10.20	14.91	2.40	9.88	88.7	81.3	67.0	55.2	43.8	112.1	126.5	144.3	1.36		0.029	
0.75 to 1.49	0.75	3.60	2.35	8.67	10.66	2.33	7.40	88.3	77.7	62.6	51.8	41.1	112.4	129.2	148.4	2.55		0.032	
1.50 to 2.19	1.5	6.10	3.00	6.55	11.26	2.00	5.85	92.1	82.8	71.1	58.1	46.2	111.4	126.1	143.9	5.09		0.061	
2.20 to 3.69	2.2	9.20	4.85	6.48	10.97	1.80	5.91	85.1	74.6	61.7	50.3	39.8	115.7	133.5	150.6	7.47		0.051	0.6
3.70 to 5.49	3.7	15.00	7.70	5.79	11.22	1.93	5.24	86.0	76.9	61.3	49.5	39.1	115.6	133.2	154.1	12.57		0.063	0.8
5.50 to 7.49	5.5	22.00	10.70	5.09	13.66	1.40	4.75	87.2	78.2	65.5	54.2	44.1	111.7	129.1	150.9	18.68		0.088	10
7.50 to 10.99	7.5	29.00	12.50	4.50	14.70	1.57	4.03	87.7	80.0	67.1	56.1	45.6	1117	128.4	149.2	25.47		0.095	1.2
11.00 to 14 99	11	42 00	17.60	3.78	15.12	1.07	3.92	91.3	83.3	69.9	58.0	47.0	114.1	130.2	147.9	37.36	85	0.132	13
15.00 to 18.49	15	55.00	20.00	3.24	16.37	1.13	3.32	90.5	83.5	72.1	60.7	49.5	109.0	121.3	137.8	50.94		0.151	
18.50 to 21.99	18.5	67.00	21.90	2.90	17.00	0.87	3.34	90.7	83.0	70.7	59.9	48.7	112.1	127.9	147.5	62.83		0.243	2.0
22.00 to 29.99	22	78.00	25.10	2.70	16.05	0.90	3.28	89.7	81.3	68.9	59.1	48.4	114.1	130.2	151.8	74.72		0.228	
30.00 to 36.99	30	107.0	38.90	2.69	15.00	0.80	3.10	90.2	81.6	68.7	57.2	45.8	114.8	132.3	153.9	101.9		0.202	2.3
37.00 to 44.99	37	130.0	41.50	2.76	16.42	0.80	2.30	88.7	78.9	65.4	54.2	43.4	112.2	126.4	143.6	125.7		0.25	2.5
45.00 to 54.99	45	156.0	47.50	2.53	16.16	0.80	2.18	89.0	79.7	66.8	55.4	44.4	112.3	126.0	141.8	152.8		0.272	
55.00 to 74.99	55	190.0	58.60	2.35	16.20	0.94	2.45	89.2	79.3	64.7	53.6	43.1	117.2	136.2	157.8	186.8		0.267	2.6
75.00 to 89.99	75	260.0	83.20	1.98	16.89	0.80	2.33	88.1	78.0	64.3	54.2	42.9	114.9	129.8	144.6	254.7		0.292	2.8
90.00 to 109.9	90	310.0	99.20	1.73	16.03	0.80	2.31	88.8	79.0	65.0	54.0	44.0	115.0	130.0	145.0	305.7		0.31	3.2
110.0 to	110	376.0	91.20	1.99	20.86	0.66	1.73	90.5	82.6	70.7	58.7	47.8	112.2	126.1	142.4	373.6		0.378	3.5

■ Three-phase 400 V series

Motor rated capacity setting range (kW) P02/A16 b16/r16	Applicable motor capacity (kW)	Rated current (A) P03/A17 b17/r17	No-load Current (A) P06/A20 b20/r20	%R1 (%) P07/A21 b21/r21	%X (%) P08/A22 b22/r22	Rated slip P12/A26 b26/r26	Iron loss factor 1 P13/A27 b27/r27	Magnetic saturation factor 1 P16/A30 b30/r30	Magnetic saturation factor 2 P17/A31 b31/r31	Magnetic saturation factor 3 P18/A32 b32/r32	Magnetic saturation factor 4 P19/A33 b 33/r33	Magnetic saturation factor 5 P20/A34 b34/r34	Magnetic saturation expansion coefficient a P21/A35 b35/r35	Magnetic saturation expansion coefficient b P22/A36 b36/r36	Magnetic saturation expansion coefficient c P23/A37 b37/r37	Torque current for vector control P55/A55 b55/r55	Induced voltage factor for vector control P56/A56 b56/r56	For adjustment by manufacturer P57/A57 b57/r57	Starting characteristic (Auto search delay time 2) H46
0.01 to 0.09	0.06	0.22	0.20	13.79	11.75	1.77	14.00	93.8	87.5	75.0	62.5	50.0	106.3	112.5	118.8	0.10	85	0.027	0.5
0.10 to 0.19	0.1	0.35	0.27	12.96	12.67	1.77	14.00	93.3	86.1	74.4	63.6	50.7	108.8	118.7	129.6	0.17		0.024	
0.20 to 0.39	0.2	0.65	0.50	12.61	113.63	2.33	12.60	90.0	81.3	67.9	56.6	45.0	112.4	126.6	145.1	0.34		0.026	
0.40 to 0.74	0.4	1.20	0.78	10.20	14.91	2.40	9.88	88.7	81.3	67.0	55.2	43.8	112.1	126.5	144.3	0.68		0.029	
0.75 to 1.49	0.75	1.80	1.18	8.67	10.66	2.33	7.40	88.3	77.7	62.6	51.8	41.1	112.4	129.2	148.4	1.27		0.032	
1.50 to 2.19	1.5	3.10	1.50	6.55	11.26	2.00	5.85	92.1	82.8	71.1	58.1	46.2	111.4	126.1	143.9	2.55		0.061	
2.20 to 3.69	2.2	4.60	2.43	6.48	10.97	1.80	5.91	85.1	74.6	61.7	50.3	39.8	115.7	133.5	150.6	3.74		0.051	0.6
3.70 to 5.49	3.7	7.50	3.85	5.79	11.22	1.93	5.24	86.0	76.9	61.3	49.5	39.1	115.6	133.2	154.1	6.28		0.063	0.8
5.50 to 7.49	5.5	11.00	5.35	5.09	13.65	1.40	4.75	87.2	78.2	65.5	54.2	44.1	111.7	129.1	150.9	9.34		0.088	1.0
7.50 to 10.99	7.5	14.50	6.25	4.50	14.70	1.57	4.03	87.7	80.0	67.1	56.1	45.6	111.7	128.4	149.2	12.74		0.095	1.2
11.00 to 14.99	11	21.00	8.80	3.78	15.12	1.07	3.92	91.3	83.3	69.9	58.0	47.0	114.1	130.2	147.9	18.68		0.132	1.3
15.00 to 18.49	15	27.50	10.00	3.24	16.37	1.13	3.32	90.5	83.5	72.1	60.7	49.5	109.0	121.3	137.8	25.47		0.151	2.0
18.50 to 21.99	18.5	34.00	11.00	2.90	17.00	0.87	3.34	90.7	83.0	70.7	59.9	48.7	112.1	127.9	147.5	31.41		0.243	
22.00 to 29.99	22	39.00	12.60	2.70	16.05	0.90	3.28	89.7	81.3	68.9	59.1	48.4	114.1	130.2	151.8	37.36		0.228	
30.00 to 36.99	30	54.00	19.50	2.69	15.00	0.80	3.10	90.2	81.6	68.7	57.2	45.8	114.8	132.3	153.9	50.94		0.202	2.3
37.00 to 44.99	37	65.00	20.80	2.76	16.42	0.80	2.30	88.7	78.9	65.4	54.2	43.4	112.2	126.4	143.6	62.83		0.25	2.5
45.00 to 54.99	45	78.00	23.80	2.53	16.16	0.80	2.18	89.0	79.7	66.8	55.4	44.4	112.3	126.0	141.8	76.41		0.272	
55.00 to 74.99	55	95.00	29.30	2.35	16.20	0.94	2.45	89.2	79.3	64.7	53.6	43.1	117.2	136.2	157.8	93.39		0.267	2.6
75.00 to 89.99	75	130.0	41.60	1.98	16.89	0.80	2.33	88.1	78.0	64.3	54.2	42.9	114.9	129.8	144.6	127.4		0.292	2.8
90.00 to 109.9	90	155.0	49.60	1.73	16.03	0.80	2.31	88.8	79.0	65.0	54.0	44.0	115.0	130.0	145.0	152.8		0.31	3.2
110.0 to 131.9	110	188.0	45.60	1.99	20.86	0.66	1.73	90.5	82.6	70.7	58.7	47.8	112.2	126.1	142.4	186.8		0.378	3.5
132.0 to 159.9	132	224.0	57.60	1.75	18.90	0.66	1.80	90.3	81.9	69.8	57.8	46.6	112.9	127.6	144.8	211.7	90	0.394	4.1
160.0 to 199.9	160	272.0	64.50	1.68	19.73	0.66	1.50	92.2	84.8	71.1	58.6	46.9	114.6	130.5	148.0	256.6		0.482	4.5
200.0 to 219.9	200	335.0	71.50	1.57	20.02	0.66	1.36	91.9	85.5	72.3	60.0	47.6	109.8	122.7	136.4	320.8		0.534	4.7
220.0 to 249.9	220	365.0	71.80	1.60	20.90	0.58	1.25	93.1	86.1	72.9	60.8	48.6	108.7	118.8	130.9	352.8		0.561	
250.0 to 279.9	250	415.0	87.90	1.39	18.88	0.54	1.33	92.2	84.9	72.7	60.5	48.9	109.9	122.2	137.8	400.9		0.571	5.0
280.0 to 314.9	280	462.0	93.70	1.36	19.18	0.54	1.27	92.7	85.6	72.9	60.9		109.3	120.2	133.5	449.1		0.589	5.5
315.0 to 354.9	315	520.0	120.0	0.84	16.68	0.45	1.81									505.2		0.862	5.6
355.0 to 399.9	355	580.0	132.0	0.83	16.40	0.43	1.77									569.3		0.891	
400.0 to 449.9	400	670.0	200.0	0.62	15.67	0.29	1.58									641.5		0.683	7.5
450.0 to 499.9	450	770.0	270.0	0.48	13.03	0.23	1.84									721.7		0.694	9.8
500.0 to 559.9	500	835.0		0.51	12.38	0.18	1.80									801.9		1.393	
560.0 to 629.9	560	940.0		0.57	13.94	0.20	1.61									898.1			
630.0 to 709.9	630	1050.0	355.0	0.46	11.77	0.17	1.29									1010		1.395	10.5
710.0 to	710	1150.0	290.0	0.54	14.62	0.21	0.97									1139		1.560	

When dedicated Fuji motor for vector control is selected by motor selection
(Function code P99/A39/b39/r39 = 2)

■ **200V series**

Motor rated capacity setting range (kW) P02/A16 b16/r16	Applicable motor capacity (kW)	Base frequency voltage F05	Rated current (A) P03/A17 b17/r17	No-load current (A) P06/A20 b20/r20	%R1 (%) P07/A21 b21/r21	%X (%) P08/A22 b22/r22	Slip compensation gain (for braking) PII/A25 b25/r25	Rated slip P12/A26 b26/r26	Iron loss factor 1 P13/A27 b27/r27	Iron loss factor 2 P14/A28 b28/r28	Iron loss factor 3 P15/A29 b29/r29	Magnetic saturation factor 1 P16/A30 b30/r30	Magnetic saturation factor 2 P17/A31 b31/r31	Magnetic saturation factor 3 P18/A32 b32/r32	Magnetic saturation factor 4 P19/A33 b 33/r33	Magnetic saturation factor 5 P20/A34 b34/r34	Magnetic saturation expansion coefficient a P21/A35 b35/r35	Magnetic saturation expansion coefficient b P22/A36 b36/r36	Magnetic saturation expansion coefficient c P23/A37 b37/r37	Torque current for vector control P55/A55 b55/r55	Induced voltage factor for vector control P56/A56 b56/r56	For adjustment by manufacturer P57/A57 b57/r57	Starting characteristic (Auto search delay time 2) H46
0.01 to 0.09	0.06	200	0.44	0.40	13.79	11.75	100.0	1.77	14.00	0.00	0.00	93.8	87.5	75.0	62.5	50.0	106.3	112.5	118.8	0.20	85	0.027	0.5
0.10 to 0.19	0.1	200	0.68	0.55	12.96	12.67		1.77	14.00			93.3	86.1	74.4	63.6	50.7	108.8	118.7	129.6	0.34		0.024	
0.20 to 0.39	0.2	200	1.30	1.06	12.95	12.92		2.33	12.60			89.7	81.9	66.9	54.5	43.3	111.0	29.3	148.4	0.68		0.023	
0.40 to 0.74	0.4	200	2.30	1.66	10.20	13.66		2.40	9.88			88.7	81.3	67.0	55.2	43.8	112.1	126.5	144.3	1.36		0.027	
0.75 to 1.49	0.75	188	4.30	3.21	4.34	9.07	89.8	1.32	7.60	7.60	10.00	93.0	85.8	72.6	60.0	47.6	109.6	121.4	136.2	2.92	79	0.054	
1.50 to 2.19	1.5	188	7.00	3.21	7.06	14.76	89.8	2.64	3.80	3.80	5.00	93.0	85.8	72.6	60.0	47.6	109.6	121.4	136.2	5.83	79	0.054	
2.20 to 3.69	2.2	188	11.00	3.81	8.27	12.95	116.7	2.62	3.00	4.00	1.00	85.2	73.7	59.1	47.6	37.4	112.3	131.1	150.0	9.75	74	0.026	0.6
3.70 to 5.49	3.7	188	18.00	8.11	6.86	12.69	94.8	2.50	3.00	2.95	2.50	88.4	80.1	66.4	54.1	43.0	113.1	130.9	158.0	15.69	78	0.042	0.8
5.50 to 7.49	5.5	188	30.0	12.98	6.05	13.44	96.6	1.49	3.00	2.50	3.00	88.3	79.5	66.0	54.1	43.0	114.0	132.0	155.1	21.92	79	0.045	1.0
7.50 to 10.99	7.5	188	37.0	15.62	6.70	12.45	105.6	1.77	2.32	1.76	3.00	85.3	70.7	53.8	43.7	34.4	117.6	140.7	176.4	30.66	82	0.035	1.2
11.00 to 14.99	11	188	50.0	24.79	4.26	11.64	83.4	0.99	4.53	1.88	0.22	84.9	75.0	61.6	50.0	39.4	115.0	137.9	171.9	40.30	93	0.044	1.3
15.00 to 18.49	15	188	65.0	26.99	4.47	12.25	100.0	1.07	0.00	1.50	1.00	88.7	80.7	67.2	55.2	44.0	110.4	125.0	142.7	53.96	85	0.067	2.0
18.50 to 21.99	18.5	188	74.0	30.58	3.22	10.68	99.7	0.93	3.50	0.50	0.50	90.7	83.2	69.5	56.8	44.4	110.0	121.4	139.6	72.83	85	0.12	
22.00 to 29.99	22	188	90.0	34.17	3.59	11.78	141.1	0.61	1.30	0.77	2.00	91.1	83.2	69.1	56.8	44.6	114.2	134.2	159.7	83.43	85	0.194	
30.00 to 36.99	30	188	116.0	53.42	2.53	12.13	106.9	0.61	2.50	3.50	5.00	84.4	74.0	59.5	48.9	38.0	119.5	146.7	183.4	108.1	88	0.193	2.3
37.00 to 44.99	37	188	143.0	60.09	2.47	14.69	107.8	0.50	1.80	3.00	5.00	85.4	75.7	62.3	50.5	39.9	120.1	147.3	186.4	133.2	89	0.092	2.5
45.00 to 54.99	45	188	170.0	56.71	2.73	15.26	95.1	0.95	1.00	0.00	0.15	89.2	81.6	67.6	56.2	43.4	112.7	133.2	163.3	169.7	87	0.148	
55.00 to 74.99	55	185	216.0	66.22	2.08	12.36	95.8	0.62	3.00	0.83	0.21	91.5	83.8	70.6	57.8	45.6	109.8	122.8	146.2	197.9	91	0.272	2.6
75.00 to 89.99	75	183	276.0	99.34	1.70	15.29	104.2	0.64	2.00	2.00	0.00	90.4	83.0	68.4	57.4	46.4	110.1	121.4	135.8	261.6	90	0.278	2.8
90.00 to 109.9	90	183	345.0	89.30	2.28	20.12	81.6	0.67	0.00	5.00	0.00	91.1	85.1	70.9	59.2	48.7	109.8	121.7	137.6	332.3	99	0.275	3.2

■ **400V series**

Motor rated capacity setting range (kW) P02/A16 b16/r16	Applicable motor capacity (kW)	Base Frequency voltage F05	Rated current (A) P03/A17 b17/r17	No-load Current (A) P06/A20 b20/r20	%R1 (%) P07/A21 b21/r21	%X (%) P08/A22 b22/r22	Slip compensation gain (for braking) PII/A25 b25/r25	Rated slip P12/A26 b26/r26	Iron loss factor 1 P13/A27 b27/r27	Iron loss factor 2 P14/A28 b28/r28	Iron loss factor 3 P15/A29 b29/r29	Magnetic saturation factor 1 P16/A30 b30/r30	Magnetic saturation factor 2 P17/A31 b31/r31	Magnetic saturation factor 3 P18/A32 b32/r32	Magnetic saturation factor 4 P19/A33 b 33/r33	Magnetic saturation factor 5 P20/A34 b34/r34	Magnetic saturation expansion coefficient a P21/A35 b35/r35	Magnetic saturation expansion coefficient b P22/A36 b36/r36	Magnetic saturation expansion coefficient c P23/A37 b37/r37	Torque current for vector control P55/A55 b55/r55	Induced voltage factor for vector control P56/A56 b56/r56	For adjustment by manufacturer P57/A57 b57/r57	Starting characteristic (Auto search delay time 2) H46
0.01 to 0.09	0.06	40G	0.22	0.20	13.79	11.75	100.0	1.77	14.00	0.00	0.00	93.8	87.5	75.0	62.5	50.0	106.3	112.5	118.8	0.10	85	0.027	0.5
0.10 to 0.19	0.1	40G	0.35	0.27	12.96	12.67		1.77	14.00	0.00	0.00	93.3	86.1	74.4	63.6	50.7	108.8	118.7	129.6	0.17		0.024	
0.20 to 0.39	0.2	40G	0.65	0.53	12.95	12.92		2.33	12.60	0.00	0.00	89.7	81.9	66.9	54.5	43.3	111.0	129.3	148.4	0.34		0.023	
0.40 to 0.74	0.4	40G	1.15	0.83	10.20	13.66		2.40	9.88	0.00	0.00	88.7	81.3	67.0	55.2	43.8	112.1	126.5	144.3	0.68		0.027	
0.75 to 1.49	0.75	40G	1.80	1.15	8.67	10.76		2.33	7.40	0.00	0.00	88.3	77.7	62.6	51.8	41.1	112.4	129.2	148.4	1.27		0.033	
1.50 to 2.19	1.5	40G	3.10	1.51	6.55	11.21		2.00	5.85	0.00	0.00	92.1	82.8	71.1	58.1	46.2	111.4	126.1	143.9	2.55		0.061	
2.20 to 3.69	2.2	40G	4.60	2.43	6.48	10.97		1.80	5.91	0.00	0.00	85.1	74.6	61.7	50.3	39.8	115.7	133.5	150.6	3.74		0.051	0.6
3.70 to 5.49	3.7	376	9.00	3.93	6.86	13.94	93.2	2.51	2.35	2.55	1.20	90.5	82.4	68.7	57.0	45.3	113.1	130.9	158.0	7.78	78	0.052	0.8
5.50 to 7.49	5.5	376	15.00	7.15	5.50	12.78	104.5	1.31	2.00	5.00	7.00	88.0	79.2	65.6	53.6	42.2	114.0	132.0	155.1	10.74	80	0.039	1.0
7.50 to 10.99	7.5	376	18.50	7.81	4.37	13.72	115.1	1.47	7.61	2.00	1.00	85.9	76.9	63.4	51.6	40.5	117.6	140.7	176.4	15.33	82	0.032	1.2
11.00 to 14.99	11	376	25.00	12.39	4.27	11.67	83.4	0.99	4.53	1.88	0.22	84.9	75.0	61.6	50.0	39.4	115.0	137.9	171.9	20.15	93	0.044	1.3
15.00 to 18.49	15	376	31.70	14.47	4.48	13.69	98.4	1.29	1.00	0.50	1.00	88.7	81.7	67.2	55.2	44.0	110.4	125.0	142.7	28.63	81	0.067	2.0
18.50 to 21.99	18.5	376	37.00	14.02	2.66	12.45	100.o	0.88	1.00	3.00	3.00	92.5	84.3	70.3	57.1	45.1	110.0	121.4	139.6	36.06	85	0.148	
22.00 to 29.99	22	376	45.00	16.81	3.61	14.06	98.7	0.90	1.50	1.50	3.00	91.1	83.2	69.1	56.5	44.6	114.2	134.2	159.7	41.72	85	0.194	
30.00 to 36.99	30	376	58.00	25.74	2.55	12.16	97.3	0.67	2.50	3.50	9.50	84.4	74.0	59.5	48.9	38.0	119.5	146.7	183.4	52.52	88	0.193	2.3
37.00 to 44.99	37	376	71.00	30.07	2.49	14.11	100.2	0.50	1.79	1.80	5.00	85.4	75.7	62.3	50.5	39.9	120.1	147.3	186.4	65.54	89	0.092	2.5
45.00 to 54.99	45	376	85.00	28.36	2.73	15.30	98.9	0.95	0.50	1.50	1.85	89.2	81.6	67.6	56.2	43.4	112.7	133.2	163.3	84.85	87	0.148	
55.00 to 74.99	55	376	108.0	33.11	2.05	12.20	95.8	0.62	3.00	0.83	0.21	91.5	83.8	70.6	57.8	45.6	109.8	122.8	146.2	98.98	89	0.266	2.6
75.00 to 89.99	75	365	138.0	49.67	1.71	15.39	104.2	0.64	2.00	2.00	0.00	90.4	83.0	68.4	57.4	46.4	110.1	121.4	135.8	130.8	90	0.314	2.8
90.00 to 109.9	90	370	173.0	44.37	2.23	18.47	94.5	0.69	0.00	2.00	0.00	90.7	83.7	69.0	57.1	44.9	109.8	121.7	137.6	164.1	94	0.311	3.2
110.0 to 131.9	110	375	206.0	53.03	2.14	16.83	108.8	0.56	0.44	0.00	0.00	90.1	82.6	67.7	56.3	44.2	109.0	119.9	133.1	195.8	93	0.412	3.5
132.0 to 159.9	132	375	248.0	62.05	1.56	17.21	110.4	0.48	0.00	0.39	0.00	90.1	81.2	67.7	56.2	45.9	112.5	125.6	148.2	237.3	90	0.438	4.1
160.0 to 199.9	160	375	297.0	70.71	1.15	17.47	100.0	0.52	0.00	0.00	0.00	91.0	84.3	71.8	59.1	47.7	108.4	120.6	136.5	286.3	88	0.474	4.5
200.0 to 219.9	200	369	369.0	107.7	1.15	14.98	93.8	0.47	0.00	2.50	0.00	93.8	87.6	74.8	60.6	48.2	108.3	117.9	131.2	341.5	93	0.447	4.7
220.0 to 244.9	220	370	409.0	98.64	1.63	14.54	102.5	0.45	1.00	1.00	0.00	95.1	88.5	75.0	63.1	51.3	108.3	118.8	130.5	385.3	98	0.468	
250.0 to 279.9	250	400																					5.0
280.0 to 314.9	280																						5.5
315.0 to 354.9	315																						5.6
355.0 to 399.0	355																						
400.0 to 449.0	400																						7.5
450.0 to 529.9	450																						9.8
530.0 to	530																						

When HP rating motor is selected by motor selection (Function code P99/A39/b39/r39 = 1)

■ **200V series**

Motor rated capacity setting range (HP) P02/A16 b16/r16	Applicable motor capacity (HP)	Rated current (A) P03/A17 b17/r17	No-load Current (A) P06/A20 b20/r20	%R1 (%) P07/A21 b21/r21	%X (%) P08/A22 b22/r22	Rated slip P12/A26 b26/r26	Iron loss factor 1 P13/A27 b27/r27	Magnetic saturation factor 1 P16/A30 b30/r30	Magnetic saturation factor 2 P17/A31 b31/r31	Magnetic saturation factor 3 P18/A32 b32/r32	Magnetic saturation factor 4 P19/A33 b 33/r33	Magnetic saturation factor 5 P20/A34 b34/r34	Magnetic saturation expansion coefficient a P21/A35 b35/r35	Magnetic saturation expansion coefficient b P22/A36 b36/r36	Magnetic saturation expansion coefficient c P23/A37 b37/r37	Torque current for vector control P55/A55 b55/r55	Induced voltage factor for vector control P56/A56 b56/r56	For adjustment by manufacturer P57/A57 b57/r57	Starting characteristic (Auto search delay time 2) H46
0.01 to 0.11	0.1	0.44	0.40	13.79	11.75	2.50	14.00	93.8	87.5	75.0	62.5	50.0	106.3	112.5	118.8	0.21		0.027	
0.12 to 0.24	0.12	0.68	0.55	12.96	12.67	2.50	14.00	93.3	86.1	74.4	63.6	50.7	108.8	118.7	129.6	0.27		0.024	
0.25 to 0.49	0.25	1.40	1.12	11.02	13.84	2.50	12.60	89.7	81.9	66.9	54.5	43.3	111.0	129.3	148.4	0.53		0.014	0.5
0.50 to 0.99	0.5	2.00	1.22	6.15	8.80	2.50	9.88	88.7	81.3	67.0	55.2	43.8	112.1	126.5	144.3	1.09		0.019	
1.00 to 1.99	1	3.00	1.54	3.96	8.86	2.50	7.40	88.3	77.7	62.6	51.8	41.1	112.4	129.2	148.4	2.21		0.036	
2.00 to 2.99	2	5.80	2.80	4.29	7.74	2.50	5.85	92.1	82.8	71.1	58.1	46.2	111.4	126.1	143.9	4.43		0.035	
3.00 to 4.99	3	7.90	3.57	3.15	20.81	1.17	5.91	85.1	74.6	61.7	50.3	39.8	115.7	133.5	150.6	6.64		0.152	0.6
5.00 to 7.49	5	12.6	4.78	3.34	23.57	1.50	5.24	86.0	76.9	61.3	49.5	39.1	115.6	133.2	154.1	11.07		0.153	0.8
7.50 to 9.99	7.5	18.6	6.23	2.65	28.91	1.17	4.75	88.6	79.2	64.9	52.7	41.8	114.3	133.1	155.6	16.60		0.234	1.0
10.00 to 14.99	10	25.3	8.75	2.43	30.78	1.17	4.03	87.7	80.0	67.1	56.1	45.6	111.7	128.4	149.2	22.15		0.209	1.2
15.00 to 19.99	15	37.3	12.7	2.07	29.13	1.00	3.92	91.3	83.3	69.9	58.0	47.0	114.1	130.2	147.9	33.22	85	0.256	1.3
20.00 to 24.99	20	49.1	9.20	2.09	29.53	1.00	33.32	90.5	83.5	72.1	60.7	49.5	109.0	121.3	137.8	44.30		0.262	
25.00 to 29.99	25	60.0	16.70	1.75	31.49	1.00	3.34	90.7	83.0	70.7	59.9	48.7	112.1	127.9	147.5	55.37		0.348	2.0
30.00 to 39.99	30	72.4	19.80	1.90	32.55	1.00	3.28	89.7	81.3	68.9	59.1	48.4	114.1	130.2	151.8	66.45		0.33	
40.00 to 49.99	40	91.0	13.60	1.82	25.32	0.47	3.10	90.2	81.6	68.7	57.2	45.8	114.8	132.3	153.9	88.60		0.497	2.3
50.00 to 59.99	50	115.0	18.70	1.92	24.87	0.58	2.30	88.7	78.9	65.4	54.2	43.4	112.2	126.4	143.6	110.7		0.419	2.5
37.00 to 44.99	60	137.0	20.80	1.29	26.99	0.35	2.18	89.0	79.7	66.8	55.4	44.4	112.3	126.0	141.8	132.9		0.757	
75.00 to 99.99	75	174.0	28.60	1.37	27.09	0.35	2.45	89.2	79.3	64.7	53.6	43.1	117.2	131.2	157.8	166.1		0.66	2.6
100.0 to 124.9	100	226.0	37.40	1.08	23.80	0.23	2.33	88.1	78.0	64.3	54.2	42.9	114.9	129.8	144.6	221.5		0.796	2.8
125.0 to 149.9	125	268.0	29.80	1.05	22.90	0.35	2.31	88.8	79.0	65.0	54.0	44.0	115.0	130.0	145.0	276.9		0.996	3.2
150.0 to	150	337.0	90.40	0.96	21.61	0.39	1.73	90.5	82.6	70.7	58.7	47.8	112.2	126.1	142.4	332.2		0.851	3.5

■ **400V series**

Motor rated capacity setting range (HP) P02/A16 b16/r16	Applicable motor capacity (HP)	Rated current (A) P03/A17 b17/r17	No-load Current (A) P06/A20 b20/r20	%R1 (%) P07/A21 b21/r21	%X (%) P08/A22 b22/r22	Rated slip P12/A26 b26/r26	Iron loss factor 1 P13/A27 b27/r27	Magnetic saturation factor 1 P16/A30 b30/r30	Magnetic saturation factor 2 P17/A31 b31/r31	Magnetic saturation factor 3 P18/A32 b32/r32	Magnetic saturation factor 4 P19/A33 b 33/r33	Magnetic saturation factor 5 P20/A34 b34/r34	Magnetic saturation expansion coefficient a P21/A35 b35/r35	Magnetic saturation expansion coefficient b P22/A36 b36/r36	Magnetic saturation expansion coefficient c P23/A37 b37/r37	Torque current for vector control P55/A55 b55/r55	Induced voltage factor for vector control P56/A56 b56/r56	For adjustment by manufacturer P57/A57 b57/r57	Starting characteristic (Auto search delay time 2) H46
0.01 to 0.11	0.1	0.22	0.20	13.79	11.75	2.50	14.00	93.8	87.5	75.0	62.5	50.0	106.3	112.5	118.8	0.10		0.027	
0.12 to 0.24	0.12	0.34	0.27	12.96	12.67	2.50	14.00	93.3	86.1	74.4	63.6	50.7	108.8	118.7	129.6	0.13		0.024	
0.25 to 0.49	0.25	0.70	0.56	11.02	13.84	2.50	12.60	89.7	81.9	66.9	54.5	43.3	111.0	129.3	148.4	0.27		0.014	0.5
0.50 to 0.99	0.5	1.00	0.61	6.15	8.80	2.50	9.88	88.7	81.3	67.0	55.2	43.8	112.1	126.5	144.3	0.55		0.019	
1.00 to 1.99	1	1.50	0.77	3.96	8.86	2.50	7.40	88.3	77.7	62.6	51.8	41.1	112.4	129.2	148.4	1.11		0.036	
2.00 to 2.99	2	2.90	1.40	4.29	7.74	2.50	5.85	92.1	82.8	71.1	58.1	46.2	111.4	126.1	143.9	2.21		0.035	
3.00 to 4.99	3	4.00	1.79	3.15	20.81	1.17	5.91	85.1	74.6	61.7	50.3	39.8	115.7	133.5	150.6	3.32		0.152	0.6
5.00 to 7.49	5	6.30	2.39	3.34	23.57	1.50	5.24	86.0	76.9	61.3	49.5	39.1	115.6	133.2	154.1	5.54		0.153	0.8
7.50 to 9.99	7.5	9.30	3.12	2.65	28.91	1.17	4.75	88.6	79.2	64.9	52.7	41.8	114.3	133.1	155.6	8.30		0.234	1.0
10.00 to 14.99	10	12.7	4.37	2.43	30.78	1.17	4.03	87.7	80.0	67.1	56.1	45.6	111.7	128.4	149.2	11.07		0.209	1.2
15.00 to 19.99	15	18.7	6.36	2.07	29.13	1.00	3.92	91.3	83.3	69.9	58.0	47.0	114.1	130.2	147.9	16.61	85	0.256	1.3
20.00 to 24.99	20	24.6	4.60	2.09	29.53	1.00	3.32	90.5	83.5	72.1	60.7	49.5	109.0	121.3	137.8	22.15		0.262	
25.00 to 29.99	25	30.0	8.33	1.75	31.49	1.00	3.34	90.7	83.0	70.7	59.9	48.7	112.1	127.9	147.5	27.69		0.348	2.0
30.00 to 39.99	30	36.2	9.88	1.90	32.55	1.00	3.28	89.7	81.3	68.9	59.1	48.4	114.1	130.2	151.8	33.22		0.33	
40.00 to 49.99	40	45.5	6.80	1.82	25.32	0.47	3.10	90.2	81.6	68.7	57.2	45.8	114.8	132.3	153.9	44.30		0.497	2.3
50.00 to 59.99	50	57.5	9.33	1.92	24.87	0.58	2.30	88.7	78.9	65.4	54.2	43.4	112.2	126.4	143.6	55.37		0.419	2.5
60.00 to 74.99	60	68.7	10.4	1.29	26.99	0.35	2.18	89.0	79.7	66.8	55.4	44.4	112.3	126.0	141.8	66.45		0.757	
75.00 to 99.99	75	86.9	14.3	1.37	27.09	0.35	2.45	89.2	79.3	64.7	53.6	43.1	117.2	136.2	157.8	83.06		0.66	2.6
100.0 to 124.9	100	113.0	18.7	1.08	23.80	0.23	2.33	88.1	78.0	64.3	54.2	42.9	114.9	129.8	144.6	110.7		0.796	2.8
125.0 to 149.9	125	134.0	14.9	1.05	22.90	0.35	2.31	88.8	79.0	65.0	54.0	44.0	115.0	130.0	145.0	138.4		0.996	3.2
150.0 to 174.9	150	169.0	45.2	0.96	21.61	0.39	1.73	90.5	82.6	70.7	58.7	47.8	112.2	126.1	142.4	166.1		0.851	3.5
175.0 to 199.9	175	169.0	45.2	0.96	21.61	0.39	1.80	90.3	81.9	69.8	57.8	46.6	112.9	127.6	144.8	183.0			4.1
200.0 to 249.9	200	231.0	81.8	0.72	20.84	0.23	1.50	92.2	84.8	71.1	58.6	46.9	114.6	130.5	148.0	209.2		1.71	4.5
250.0 to 299.9	250	272.0	41.1	0.71	18.72	0.35	1.36	91.9	85.5	72.3	60.0	47.6	109.8	122.7	136.4	261.5		0.994	4.7
300.0 to 324.9	300	323.0	45.1	0.53	18.44	0.23	1.25	93.1	86.1	72.9	60.8	48.6	108.7	118.8	130.9	313.8		1.151	
325.0 to 349.9	325	323.0	45.1	0.53	18.44	0.23	1.33	92.2	84.9	72.7	60.5		109.9	122.2	137.8	339.9			5.0
350.0 to 399.9	350	375.0	68.3	0.99	19.24	0.46	1.27									366.1		1.126	5.5
400.0 to 449.9	400	429.0	80.7	1.11	18.92	0.46	1.81									418.4	90	1.098	5.6
450.0 to 499.9	450	481.0	85.5	0.95	19.01	0.48	1.77									470.7		1.107	
500.0 to 599.9	500	534.0	99.2	1.05	18.39	0.45	1.58	92.7	85.6	72.9	60.9	48.9	109.3	120.2	133.5	523.0		1.128	7.5
600.0 to 699.9	600						1.84									627.6		1.098	
700.0 to 749.9	700	638.0	140.0	0.85	18.38	0.39										732.2		0.578	9.8
750.0 to 799.9	750						1.70									784.0			
800.0 to	800															837.0		0.842	10.5

When Fuji premium efficiency motor is selected by motor selection (Function code P99/A39/b39/r39 = 5)

■ **Three-phase 200V series**

Motor rated capacity setting range (kW) P02/A16 b16/r16	Applicable motor capacity (kW)	Rated current (A) P03/A17 b17/r17	No-load Current (A) P06/A20 b20/r20	%R1 (%) P07/A21 b21/r21	%X (%) P08/A22 b22/r22	Rated slip P12/A26 b26/r26	Iron loss factor 1 P13/A27 b27/r27	Magnetic saturation factor 1 P16/A30 b30/r30	Magnetic saturation factor 2 P17/A31 b31/r31	Magnetic saturation factor 3 P18/A32 b32/r32	Magnetic saturation factor 4 P19/A33 b33/r33	Magnetic saturation factor 5 P20/A34 b34/r34	Magnetic saturation expansion coefficient a P21/A35 b35/r35	Magnetic saturation expansion coefficient b P22/A36 b36/r36	Magnetic saturation expansion coefficient c P23/A37 b37/r37	Torque current for vector control P55/A55 b55/r55	Induced voltage factor for vector control P56/A56 b56/r56	For adjustment by manufacturer P57/A57 b57/r57	Starting characteristic (Auto search delay time 2) H46
0.01 to 0.09	0.06	0.44	0.40	13.79	11.75	1.77	140.00	93.8	87.5	75.0	62.5	50.0	106.3	112.5	118.8	0.20	85	0.027	0.5
0.10 to 0.19	0.1	0.68	0.55	12.96	12.67	1.77	14.00	93.3	86.1	74.4	63.6	50.7	108.8	118.7	129.6	0.34		0.024	
0.20 to 0.39	0.2	1.30	1.06	12.95	12.92	2.33	12.60	89.7	81.9	66.9	54.5	43.3	111.0	129.3	148.4	0.68		0.023	
0.40 to 0.74	0.4	2.30	1.66	10.20	13.66	2.40	9.88	88.7	81.3	67.0	55.2	43.8	112.1	126.5	144.3	1.36		0.027	
0.75 to 1.49	0.75	3.50	1.87	5.49	13.71	2.00	4.31	92.5	85.1	71.8	59.1	46.7	108.6	117.3	128.3	2.28	95	0.050	
1.50 to 2.19	1.5	6.90	3.96	5.04	13.70	1.67	4.21	89.6	79.6	66.1	54.1	42.9	115.5	131.1	148.4	4.56		0.085	0.6
2.20 to 3.69	2.2	9.50	5.46	4.07	12.98	1.67	3.94	89.4	79.3	65.8	53.9	42.7	115.5	131.1	148.4	6.69		0.092	
3.70 to 5.49	3.7	15.50	8.50	4.07	13.15	1.17	3.59	92.0	84.2	70.7	58.2	45.9	112.8	126.0	141.4	11.24		0.102	0.8
5.50 to 7.49	5.5	21.00	10.55	3.17	11.47	1.00	2.86	92.0	84.2	70.5	58.3	46.1	112.8	126.2	144.6	16.71		0.137	1.0
7.50 to 10.99	7.5	27.50	11.68	3.01	12.56	1.00	2.36	92.4	84.8	71.5	59.2	46.8	110.1	120.9	136.5	22.79		0.158	1.2
11.00 to 14.99	11	40.00	14.90	2.21	14.28	1.00	2.56	92.5	85.2	72.2	59.8	47.4	110.7	122.1	139.0	33.43		0.207	1.4
15.00 to 18.49	15	54.00	18.50	1.94	14.34	0.83	2.32	92.8	85.7	72.8	60.3	47.9	108.7	118.1	132.8	45.58		0.242	2.0
18.50 to 21.99	18.5	68.00	27.40	1.48	15.10	0.67	1.86	92.9	85.8	73.1	61.0	48.8	109.4	119.1	131.6	56.22		0.240	
22.00 to 29.99	22	84.00	33.60	1.46	15.29	0.83	1.91	92.7	85.5	72.6	60.5	48.5	110.5	121.3	135.2	66.85		0.238	
30.00 to 36.99	30	116.0	45.60	1.40	15.38	0.83	1.91	92.3	84.8	71.8	59.8	47.9	111.4	123.2	139.0	91.16		0.244	2.3
37.00 to 44.99	37	137.0	55.00	1.20	15.75	0.67	1.61	93.3	86.7	74.3	62.0	49.7	107.3	114.9	124.8	112.4		0.321	2.5
45.00 to 54.99	45	166.0	64.90	1.21	16.14	0.67	1.58	93.2	86.5	73.9	61.7	49.5	107.9	116.3	128.6	136.7		0.318	
55.00 to 74.99	55	208.0	88.00	1.36	14.44	0.50	1.73	93.8	87.5	75.0	62.5	50.0	106.3	112.5	118.8	189.0	84	0.304	2.6
75.00 to 89.99	75	272.0	90.00	1.46	17.78	0.50	1.33	93.8	87.5	75.0	62.5	50.0	106.3	112.5	118.8	257.7		0.452	3.0
90.00 to 109.9	90	324.0	112.0	1.45	15.67	0.50	1.33	93.8	87.5	75.0	62.5	50.0	106.3	112.5	118.8	305.7	85	0.430	3.2
110.0 to	110	384.0	136.0	1.29	14.80	0.33	1.27	93.8	87.5	75.0	62.5	50.0	106.3	112.5	118.8	360.8	88	0.527	3.5

■ **Three-phase 400 V series**

An 8-series motor provisional constant is set for motors with power output of 400 kW or higher.

Motor rated capacity setting range (kW) P02/A16 b16/r16	Applicable motor capacity (kW)	Rated current (A) P03/A17 b17/r17	No-load Current (A) P06/A20 b20/r20	%R1 (%) P07/A21 b21/r21	%X (%) P08/A22 b22/r22	Rated slip P12/A26 b26/r26	Iron loss factor 1 P13/A27 b27/r27	Magnetic saturation factor 1 P16/A30 b30/r30	Magnetic saturation factor 2 P17/A31 b31/r31	Magnetic saturation factor 3 P18/A32 b32/r32	Magnetic saturation factor 4 P19/A33 b33/r33	Magnetic saturation factor 5 P20/A34 b34/r34	Magnetic saturation expansion coefficient a P21/A35 b35/r35	Magnetic saturation expansion coefficient b P22/A36 b36/r36	Magnetic saturation expansion coefficient c P23/A37 b37/r37	Torque current for vector control P55/A55 b55/r55	Induced voltage factor for vector control P56/A56 b56/r56	For adjustment by manufacturer P57/A57 b57/r57	Starting characteristic (Auto search delay time 2) H46
0.01 to 0.09	0.06	0.22	0.20	13.19	11.75	1.77	14.00	93.8	87.5	75.0	62.5	50.0	106.3	112.5	118.8	0.10	85	0.027	0.5
0.10 to 0.19	0.1	0.35	0.27	12.96	12.67	1.77	14.00	93.3	86.1	74.4	63.6	50.7	108.8	118.7	129.6	0.17		0.024	
0.20 to 0.39	0.2	0.65	0.53	12.95	12.92	2.33	12.60	89.7	81.9	66.9	54.5	43.3	111.0	129.3	148.4.	0.34		0.023	
0.40 to 0.74	0.4	1.15	0.83	10.20	13.66	2.40	9.88	88.7	81.3	67.0	55.2	43.8	112.1	126.5	144.3	0.68		0.027	
0.75 to 1.49	0.75	1.80	0.94	5.49	13.71	2.00	4.31	92.5	85.1	71.8	59.1	46.7	108.6	117.3	128.3	1.14	95	0.050	
1.50 to 2.19	1.5	3.50	1.98	5.04	13.70	1.67	4.21	89.6	79.6	66.1	54.1	42.9	115.5	131.1	148.4	2.28		0.085	0.6
2.20 to 3.69	2.2	4.80	2.73	4.07	12.98	1.67	3.94	89.4	79.3	65.8	53.9	42.7	115.5	131.1	148.4	3.34		0.092	
3.70 to 5.49	3.7	7.80	4.25	4.07	13.15	1.17	3.59	92.0	84.2	70.7	58.2	45.9	112.8	126.0	141.4	5.62		0.102	0.8
5.50 to 7.49	5.5	10.50	5.28	3.17	11.47	1.00	2.86	92.0	84.2	70.5	58.3	46.1	112.8	126.2	144.6	8.36		0.137	1.0
7.50 to 10.99	7.5	13.50	5.84	3.01	12.56	1.00	2.36	92.4	84.8	71.5	59.2	46.8	110.1	120.9	136.5	11.40		0.158	1.2
11.00 to 14.99	11	20.00	7.45	2.21	14.28	1.00	2.56	92.5	85.2	72.2	59.8	47.4	110.7	122.1	139.0	16.71		0.207	1.4
15.00 to 18.49	15	27.00	9.25	1.94	14.34	0.83	2.32	92.8	85.7	72.8	60.3	47.9	108.7	118.1	132.8	22.79		0.242	2.0
18.50 to 21.99	18.5	34.00	13.70	1.48	15.10	0.67	1.86	92.9	85.8	73.1	61.0	48.8	109.4	119.1	131.6	28.11		0.240	
22.00 to 29.99	22	42.00	16.80	1.46	15.29	0.83	1.91	92.7	85.5	72.6	60.5	48.5	110.5	121.3	135.2	33.43		0.238	
30.00 to 36.99	30	58.00	22.80	1.40	15.38	0.83	1.91	92.3	84.8	71.8	59.8	47.9	111.4	123.2	139.0	45.58		0.244	2.3
37.00 to 44.99	37	69.00	27.50	1.20	15.75	0.67	1.61	93.3	86.7	74.3	62.0	49.7	107.3	114.9	124.8	56.22		0.321	2.5
45.00 to 54.99	45	83.00	32.45	1.21	16.14	0.67	1.58	93.2	86.5	73.9	61.7	49.5	107.9	116.3	128.6	68.37		0.318	
55.00 to 74.99	55	104.0	44.00	1.36	14.44	0.50	1.73	93.8	87.5	75.0	62.5	50.0	106.3	112.5	118.8	93.39	84	0.304	2.6
75.00 to 89.99	75	136.0	45.00	1.46	17.78	0.50	1.33									127.4		0.452	3.0
90.00 to 109.9	90	162.0	56.00	1.45	15.67	0.50	1.33									152.8	85	0.430	3.2
110.0 to 131.9	110	192.0	68.00	1.29	14.80	0.33	1.27									186.8	88	0.527	3.5
132.0 to 159.9	132	230.0	72.00	1.11	14.74	0.33	1.21									211.7	87	0.583	4.1
160.0 to 199.9	160	285.0	95.00	0.99	19.09	0.67	1.06									256.6	86	0.488	4.5
200.0 to 219.9	200	352.0	122.0	1.00	18.33	0.67	1.00									320.8	87	0.466	4.7
220.0 to 249.9	220	390.0	144.0	0.82	18.14	0.67	1.14									352.8	88	0.451	
250.0 to 299.9	250	450.0	164.0	0.87	19.48	0.67	1.12									400.9	86	0.426	5.0
300.0 to 314.9	300	532.0	179.0	0.93	21.04	0.67	1.00									481.1		0.425	5.5
315.0 to 354.9	315	554.0	183.0	0.80	20.07	0.50	1.11									505.2	87	0.556	5.6
355.0 to 374.9	355	620.0	200.0	0.78	19.59	0.50	1.07									569.3		0.570	
375.0 to 399.9	375	660.0	223.0	0.74	19.10	0.50	1.15									601.4		0.565	
400.0 to 449.9	400	670.0	200.0	0.62	15.67	0.29	1.58	92.7	85.6	72.9	60.9	48.9	109.3	120.2	133.5	641.5	90	0.683	7.5
450.0 to 499.9	450	770.0	270.0	0.48	13.03	0.23	1.84									721.7		0.694	9.8
500.0 to 559.9	500	835.0		0.51	12.38	0.18	1.80									801.9		1.393	
560.0 to 629.9	560	940.0		0.57	13.94	0.20	1.61									898.1			
630.0 to 709.9	630	1050.0	355.0	0.46	11.77	0.17	1.29									1010		1.395	10.5
710.0 to	710	1150.0	290.0	0.54	14.62	0.21	0.97									1139		1.560	

Note

An 8-series motor provisional constant is set for motors with power output of 400 kW or higher. When using such motors, obtain the motor constant table, and enter the constants for the relevant function codes.

5.3 Description of Function Codes

This section describes details of function code. In principle, explanation is given for each function code in order of group and numerical order. However, function codes that are strongly related to one function are explained together in the first paragraph.

5.3.1 F codes (Fundamental functions)

F00	Data protection

This is a function to protect currently set data by disabling to make changes in function code data (except F00) and all types of command values (frequency setting, PID command) by ▲/▼ key operation from keypad.

F00 data	Function code change		Command value setting with keypad operation (▲/▼ keys)
	Change at keypad	Change with communication	
0	Allowed	Allowed	Allowed
1	Not allowed*	Allowed	Allowed
2	Allowed	Allowed	Not allowed
3	Not allowed*	Allowed	Not allowed

* Function codes cannot be changed at the keypad, however, function code F00 can be changed.

F00 data can be changed using the "STOP key + ▲ key", or "STOP key + ▼ key" double operation.

As a similar function related to data protection, “Allow function code editing (Data change enabled) ‘WE-KP’” which can be assigned to a digital input terminal is available (📖 Function code E01 to E09 data = 19).

By combining data protection F00, protection of function code functions as follows:

Input signal “WE-KP”	Function code change	
	Changes from the keypad	Change from communication
OFF	Not allowed	Allowed
ON	Follow setting of F00	

Note

- If “enable data change with keypad” [WE-KP] is set to a digital input terminal by mistake, it is not possible to make changes in function codes. In this case, after shortening (ON) the terminal to which temporarily “WE-KP” function is assigned, and the terminal [CM], change to a different function.
- “WE-KP” is the change enable signal for function code, this is not the function to protect frequency setting and PID command by ▲/▼ key operation.

F01	**Frequency setting 1** **Related function code:** **F18 Bias (Frequency setting 1)** **C30 Frequency setting 2** **C31 to C35 Analog input adjustment (Terminal [12])** **C36 to C40 Analog input adjustment (Terminal [C1] (C1 function))** **C41 to C45 Analog input adjustment (Terminal [V2])** **C55 to C56 Analog input adjustment (Terminal [12]) (Bias, Bias reference point)** **C61 to C62 Analog input adjustment (Terminal [C1] (C1 function)) (Bias, Bias reference point)** **C67 to C68 Analog input adjustment (Terminal [V2]] (Bias, Bias reference point)** **C74 to C78 Analog input adjustment (Terminal [C1] (V3 function))** **C82 to C83 Analog input adjustment (Terminal [C1] (V3 function)) (Bias, Bias reference point)** **C50 Bias (Frequency setting 1) (Bias reference point)** **H61 UP/DOWN control - Initial value selection** **H62 UP/DOWN (Extended function selection)** **d59, d61 to d63 Command (Pulse train input)**

Select setting method of frequency setting. Select Frequency setting 1 with function code F01, and Frequency setting 2 with C30. Frequency setting 1 and Frequency setting 2 are selected with “Frequency setting 2/Frequency setting 1 “Hz2/ Hz1”” assigned to the digital input terminal. (📖 Function code E01 to E09 data = 11).

Tip

If a frequency setting of even higher priority than F01/C30 (multistep frequency, jogging (inching), frequency setting from communication, etc.) is selected, the frequency is set based on the priority (F01/C30 is disabled).
Refer to Chapter 8 “8.2 Frequency Setting Section” for details on the frequency setting priority.
(The closer switches are to the block diagram output (frequency command) side, the higher the priority.)

F01, C30 data	Command source
0	Frequency setting with keypad (refer to the following descriptions to find the setting method)
1	Setting with voltage value to be input for terminal [12] (0 to ±10 VDC, maximum output frequency/±10 VDC)
2	Setting with current value (4 to 20 mA DC, maximum output frequency/20 mA DC) input for terminal [C1] (C1 function) (Set slide switch SW8 on the PCB to the [C1] side.)
3	Setting with result of adding the voltage value to be input for terminal [12] (0 to ±10 VDC, maximum output frequency/±10 VDC) and the current value to be input for terminal [C1] (4 to 20 mA DC, maximum output frequency/20 mA DC) (If the result of addition is equal to or higher than the maximum output frequency, frequency is restricted to the maximum output frequency.)
5	Setting with voltage value to be input for terminal [V2] (0 to ±10 VDC, maximum output frequency/±10 VDC) (Set slide switch SW5 on the PCB to the [V2] side).
6	Setting with voltage value to be input for terminal [C1] (V3 function) (0 to ±10 VDC, maximum output frequency/±10 VDC) (Set slide switch SW8 on the PCB to the [V3] side).
7	Setting with UP command “UP” and DOWN command “DOWN” assigned to the digital input terminal It is necessary to assign the UP command (Data = 17) and DOWN command (Data = 18) to digital input terminal [X1] to [X9]. (E01 to E09)
8	Frequency setting with keypad (with balanceless/bumpless function)
10	Setting with pattern operation
11	Frequency setting with digital input interface card (option) (Refer to the Option Instruction Manual for details.)
12	Setting with pulse train input “PIN” (data = 48) assigned to digital input terminal [X6] and [X7], or with PG interface card (option) Note: If using terminal [X6] and [X7] with pulse train input, they may be affected by noise from other wiring. Keep wiring to terminal [X6] and [X7] and other wiring as far apart as possible.

Setting method of reference frequency

[1] Setting the frequency with the keypad (F01 = 0 or 8)

(1) Set the data of function code F01 to “0” or “8”. When the keypad is set to Programming or Alarm mode, the ▲/▼ keys are disabled to modify the reference frequency. You need to switch to Running mode to enable frequency setting with the ▲/▼ keys.

(2) When ▲/▼ keys are pressed, reference frequency is displayed and the least significant digit of the reference frequency flashes.

(3) By pressing the ▲/▼ keys again, it is possible to change the reference frequency. The changed reference frequency is automatically saved (function code E64 = 0). Saved setting values are reflected in function code C99, and are therefore copied with the keypad or FRENIC-Loader4 copy function.

Tip

- A manual saving method (function code E64 = 1) is available in addition to the above method for saving frequency setting data. After changing the reference frequency, press the FUNC/DATA key to save.
- While the data of function code F01 is set to “0” or “8”, when frequency setting method other than Frequency setting 1 (Frequency setting 2, communication, multistep frequency) is selected as frequency setting, it is not possible to change the reference setting with ▲/▼ keys even if keypad is at operation mode. In this case, pressing ▲/▼ keys displays the currently selected reference frequency.
- When frequency setting is performed with ▲/▼ keys, the least significant digit displayed flashes and the data is changed from the least significant digit and the changing digit gradually shifts to the upper digit.
- In order to perform setting such as reference frequency, press ▲/▼ once and when the least significant digit flashes, push down the ▶ key, and then, the flashing digit will move. Therefore, it is possible to change the large numerical number easily. This operation is called cursor movement.
- When the data of function code F01 is set to “8”, balanceless/bumpless function becomes enabled. If changing to frequency setting with the keypad from a frequency setting method other than the keypad, initial values for the new method will be the frequency settings prior to changing. By using this function, even if frequency setting is switched, it is possible to perform operation without shock.

[2] Setting the frequency with analog input (F01 = 1 to 3, 5, 6)

It is possible to arbitrarily specify a frequency setting from the analog inputs (voltage value to be input to terminal [12], [V2], and [C1] (V3 function), or current value to be input to terminal [C1] (C1 function)) by multiplying them with the gain and adding the bias. The polarity can be selected and the filter time constant and offset can be adjusted.

Adjustment constants of Frequency setting 1

F01 data	Input terminal	Input range	Bias		Gain		Polarity selection	Filter	Offset
			Bias	Base point	Gain	Base point			
1	[12]	0 to +10 V, -10 to +10 V	F18	C50	C32	C34	C35	C33	C31
2	[C1] (C1 function)	4 to 20 mA 0 to 20 mA	F18	C50	C37	C39	C40	C38	C36
3	[12] + [C1] (C1 function) (Set by result of addition)	0 to +10 V, -10 to +10 V	F18	C50	C32	C34	C35	C33	C31
		4 to 20 mA 0 to 20 mA	F18	C50	C37	C39	C40	C38	C36
5	[V2]	0 to +10 V, -10 to +10 V	F18	C50	C42	C44	C45	C43	C41
6	[C1] (V3 function)	0 to +10 V, -10 to +10 V	F18	C50	C75	C77	C78	C76	C74

Adjustment constants of Frequency setting 2

C30 data	Input terminal	Input range	Bias		Gain		Polarity selection	Filter	Offset
			Bias	Base point	Gain	Base point			
1	[12]	0 to +10 V, -10 to +10 V	C55	C56	C32	C34	C35	C33	C31
2	[C1] (C1 function)	4 to 20 mA 0 to 20 mA	C61	C62	C37	C39	C40	C38	C36
3	[12] + [C1] (C1 function) (Set by result of addition)	0 to +10 V, -10 to +10 V	C55	C56	C32	C34	C35	C33	C31
		4 to 20 mA 0 to 20 mA	C61	C62	C37	C39	C40	C38	C36
5	[V2]	0 to +10 V	C67	C68	C42	C44	C45	C43	C41
6	[C1] (V3 function)	0 to +10 V, -10 to +10 V	C82	C83	C75	C77	C78	C76	C74

■ Offsets (C31, C36, C41, C74)

C31, C36, C41 or C74 configures an offset for an analog voltage/current input. The offset also applies to signals sent from the external equipment.

■ Filters (C33, C38, C43, C76)

C33, C38, C43 and C76 provide the filter time constants for the voltage and current of the analog input. The larger the time constant, the slower the response. Specify the proper filter time constant taking into account the response speed of the machine (load). If the input voltage fluctuates due to line noises, increase the time constant.

■ Polarity selection for terminal (C35, C45, C78)

C35, C45 and C78 configures the polarity and therefore the input range for analog input voltage.

C35, C45, C78 data	Terminal [12], [V2], [C1] (V3 function) input specifications
0: Bipolar	-10 to +10 V
1: Unipolar	0 to +10 V (Negative value of voltage is regarded as 0 V)

■ **Terminal [C1] (C1 function) range / polarity selection (C40)**

C40 data	Terminal input range	Handling when bias value is set to minus
0: Unipolar	4 to 20 mA	Limit below 0 point with 0
1: Unipolar	0 to 20 mA	
10: Bipolar	4 to 20 mA	Enable below 0 point as minus value.
11: Bipolar	0 to 20 mA	

In order to use terminal [C1] with the C1 function and V3 function, the following settings are necessary.

[C1] terminal	SW8	C40	C78
When using C1 function (4 to 20 mA)	C1 side	0 (unipolar) 10 (bipolar)	Not required
When using C1 function (0 to 20 mA)	C1 side	1 (unipolar) 11 (bipolar)	Not required
When using V3 function (0 to ±10 V)	V3 side	Not required	0
When using V3 function (0 to +10 V)	V3 side	Not required	1

Refer to Chapter 2 "2.2.7 Switching switches" for details on SW8.

■ **Gain and bias**

Terminal	<Frequency setting 1: F01>	<Frequency setting 2: C30>
[12]	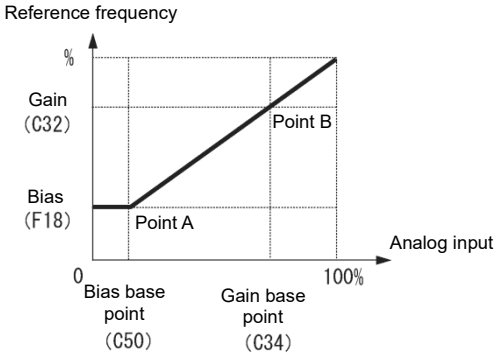	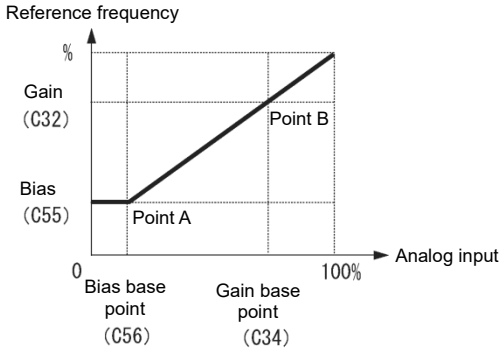
[C1] (C1 function)	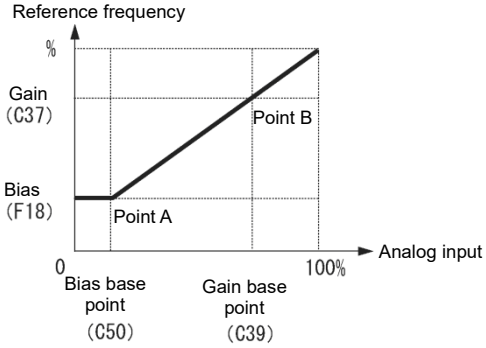	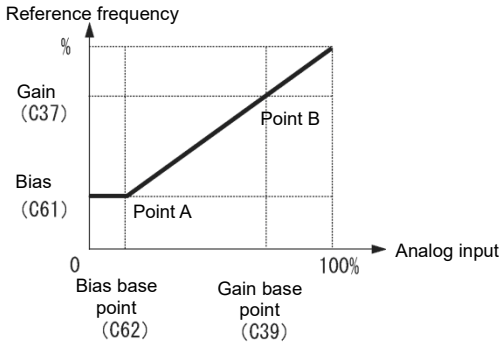
[V2]	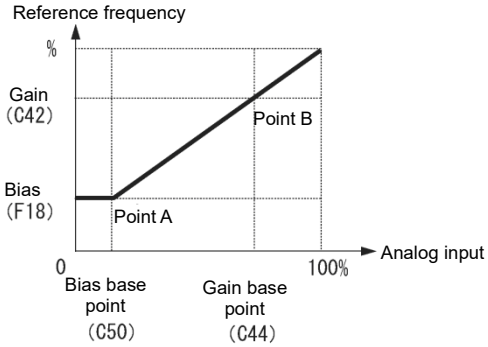	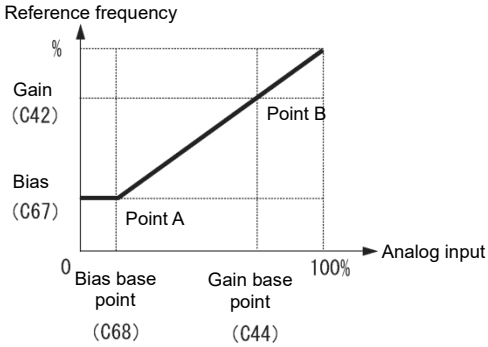
[C1] (V3 function)	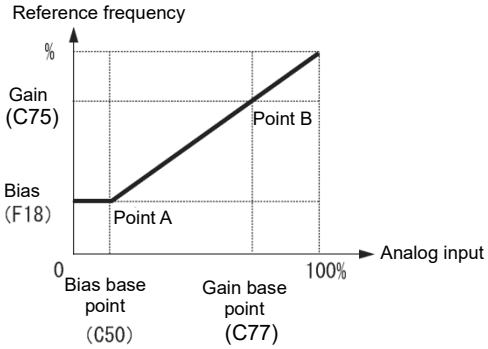	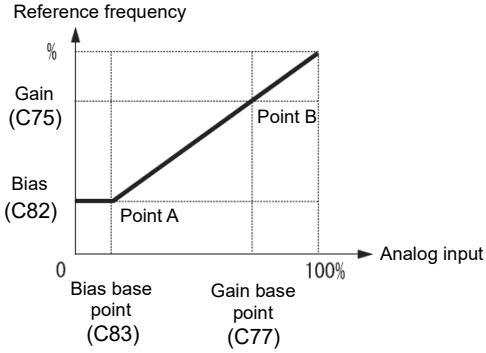

FUNCTION
F Codes
E Codes
C Codes
P Codes
H Codes
A Codes
b Codes
r Codes
J Codes
d Codes
U Codes
y Codes
K Codes

Note For [12] + [C1] (C1 function) (setting by the result of addition), bias and gain are reflected to [12] and [C1] (C1 function) individually, and added by frequency command value of the result.

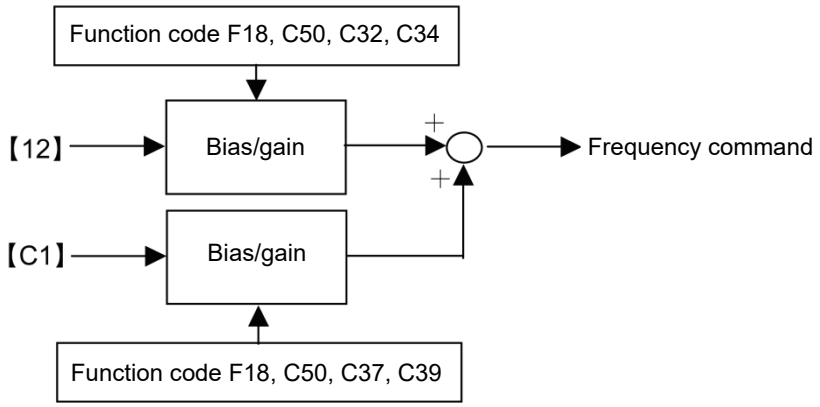

If unipolar (terminal [12] (C35 = 1), terminal [V2] (C45 = 1), terminal [C1] (C1 function) (C40 = 0, 1), terminal [C1] (V3 function) (C78 = 1))

For reference frequency and analog input of Frequency setting 1, it is possible to set arbitrary relationship by A point (determined by bias (F18) and bias reference point (C50)) and point B (determined by the gain corresponding to each analog input and the gain reference point (C32 and C34, C37 and C39, C42 and C44, and C75 and C77)).

For reference frequency and analog input of Frequency setting 2 (C30), it is possible to set arbitrary relationship by point A (determined by bias and bias reference point (C55 and C56, C61 and C62, C67 and C68, and C82 and C83) and point B (determined by the gain corresponding to each analog input and the gain reference point (C32 and C34, C37 and C39, C42 and C44, and C75 and C77).

Both data of bias and gain are set with 100% as the maximum output frequency. The data of bias reference point and gain reference point are set up with full scale of analog input (10 V or 20 mA) as 100%.

Note

<Frequency setting 1: F01>

- Analog input at or below bias reference point (C50) is restricted by bias value (F18).
- When the value set in bias reference point (C50) ≥ each gain reference point (C34, C39, C44, C77), it is judged as incorrect setting and reference point becomes 0 Hz.

<Frequency setting 2: C30>

- Analog input at or below bias reference point (C56, C62, C68, C83) is restricted by bias value (C55, C61 C67, and C82).
- When the value set in bias reference point (C56, C62, C68, C83) ≥ each gain reference point (C34, C39, C44, C77), it is judged as incorrect setting and reference point becomes 0 Hz.

Example) When setting reference frequency to 0 to 60 Hz by analog input (terminal [12]) 1 to 5 V
(When maximum output frequency is F03 = 60 Hz)

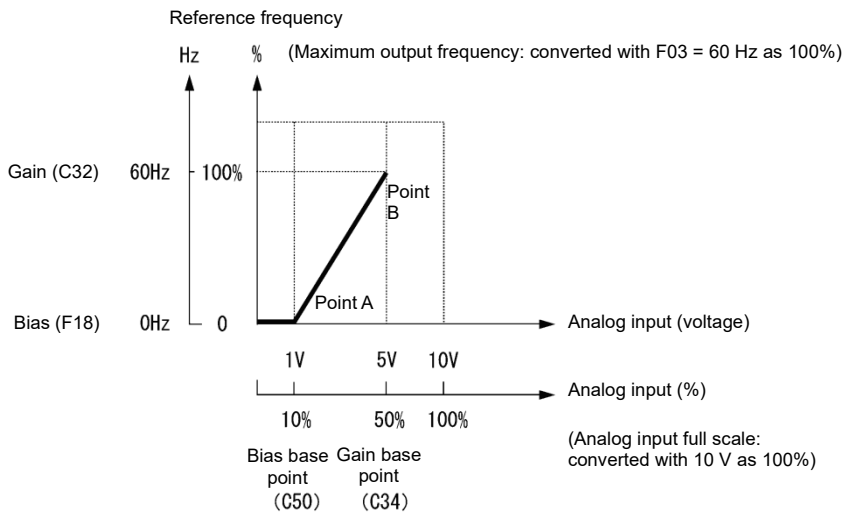

(Point A)

In order to set reference frequency to 0 Hz when analog input is 1 V, set bias (F18) to 0 %. At this point, 1 V has to become the bias reference point and 1 V is equivalent to 10 % against full scale 10 V of terminal [12], therefore, set the bias reference point (C50) to 10 %.

(Point B)

In order to set reference frequency so that the frequency becomes the highest when analog input is 5 V, set the gain (C32) to 100 %. At this point, 5 V has to become the gain reference point and 5 V is equivalent to 50 % against full scale 10 V of terminal [12], therefore, set the gain reference point (C34) to 50 %.

Note

The setting method without changing reference point and by using gain and bias individually is the same as for Fuji's 11-series inverter.

FUNCTION
F Codes
E Codes
C Codes
P Codes
H Codes
A Codes
b Codes
r Codes
J Codes
d Codes
U Codes
y Codes
K Codes

If bipolar (terminal [12] (C35 = 0), terminal [V2] (C45 = 0), terminal [C1] (V3 function) (C78 = 0))

For terminal [12], [V2], and [C1] (V3 function), by setting function codes C35, C45, and C78 to “0”, it is possible to use bipolar input (-10 to +10 V).

When both bias (F18) and bias reference point (C50) are set to “0”, command becomes forward and reverse symmetric as shown in the diagram below.

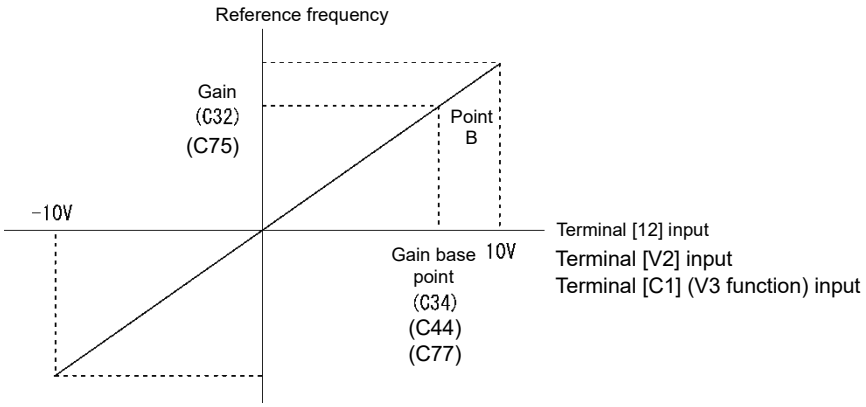

Note

- When bias (F18) and bias reference point (C50) is set to arbitrary value (A1 point, A2 point, and A3 point, etc.), as shown in the diagram below, it is determined by the bias value (F18).

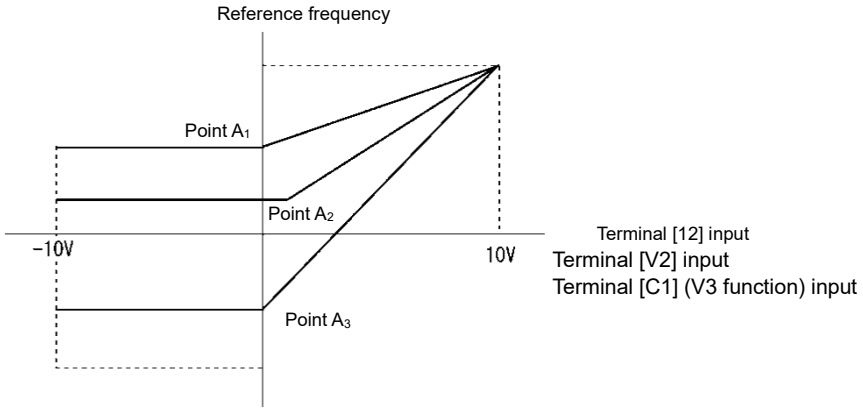

Note

- To input bipolar (0 to ±10 VDC) analog voltage by analog input, set function codes C35, C45, and C78 to “0”. When the C35, C45, and C78 data is “1”, only 0 to +10 VDC effective and negative polar input 0 to -10 VDC regarded as 0 (Zero) V.
- When setting reference frequency by display other than frequency (Hz), please change the speed monitor unit in E48.

When operating unipolar analog input as bipolar
(terminal [12] (C35 = 0), terminal [V2] (C45 = 0), terminal [C1] (C1 function) (C40 = 10, 11), terminal [C1] (V3 function) (C78 = 0))

By setting the bias value to a minus value, it is possible to obtain a negative reference frequency.

Example of frequency setting with terminal [V2] when -100 % is set to the bias value is shown in the diagram below.

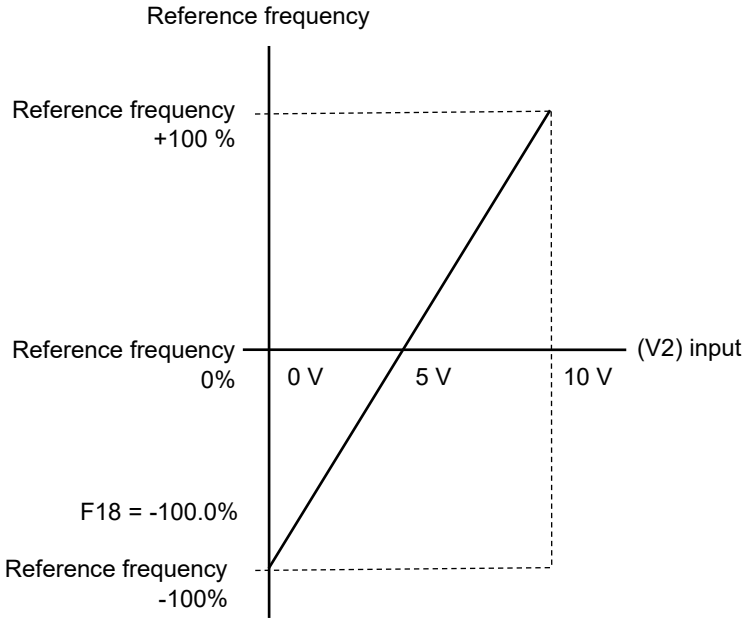

[3] Frequency setting by digital input signal “UP”/“DOWN” (F01=7)

As frequency setting, UP/DOWN control is selected, and when the terminal command UP or DOWN is turned on with Run command ON, the output frequency increases or decreases accordingly, within the range from 0 Hz to the maximum output frequency.

To perform frequency setting by UP/DOWN control, it is necessary to set the data of function code F01 to “7” and assign “UP command [UP], down command [DOWN]” to the digital input terminals. (🕮 Function code E01 to E09 data = 17, 18)

Input signal “UP”	Input signal “DOWN”	Enable
Data = 17	Data = 18	
OFF	OFF	The output frequency will be held
ON	OFF	Increase output frequency by currently selected acceleration time
OFF	ON	Decrease output frequency by currently selected deceleration time
ON	ON	The output frequency will be held

■ UP/DOWN control initial value selection

In addition to the reference frequency initial value when starting control, select the following operations.

H61 data	Initial value of frequency setting when starting UP/DOWN control	UP/DOWN tilt	UP/DOWN operation while the inverter is stopped
0	Mode to fix to "0" [Compatible with previous models] When restarting operation (including when the power to the inverter is turned ON), initial value of setting frequency by UP/DOWN control is cleared with "0". Increase speed by UP command.	UP/DOWN based on selected acceleration/deceleration time	Not possible (fixed at 0)
1	This is the mode to set reference frequency at the previous UP/DOWN control as the initial value. [Compatible with previous models] The inverter internally holds the output frequency set by UP/DOWN control and starts to control from the previous operation frequency at the next restart (including powering ON). The value in the memory is cleared by turning ON digital input UP/DOWN frequency clear command "STZ". (🕮 Function code E01 to E09 data = 58)		Not possible (previous value held)
2	Mode used to fix to "0" When resuming operation (including when power turned ON), the initial value for the setting frequency with UP/DOWN control is cleared to "0". Increase the speed with the UP command.	UP/DOWN based on the following tilt that is not dependent on acceleration/ deceleration time By turning ON UP or DOWN, the tilt changes by 0.1%, and when continuously ON, the UP/DOWN operation is performed at change rate of 0.1%/0.1 s or 1%/0.1 s. 100% indicates the maximum output frequency. This operation is the same as UP/DOWN control for PID commands. (🕮 Function code J02 data = 3)	Not possible (fixed at 0)
3	Mode used to set reference frequency operated with previous UP/DOWN command to initial value The reference frequency can be increased or decreased with the UP/DOWN command, regardless of the inverter operating status, and control is started from the reference frequency at that point when operation is resumed (incl. when power turned ON). The value in the memory is cleared by turning ON digital input UP/DOWN frequency clear command "STZ". (🕮 Function code E01 to E09 data = 58)		Allowed

Note The H61 factory default for this model is "3".
If using the UP/DOWN control function on previous models, operation corresponds to that of previous models by setting "0" or "1" when replacing the inverter.

<Initial value of UP/DOWN control when setting method of frequency setting is switched>

The initial value when setting method of frequency setting is set to UP/DOWN control is shown in the following table.

Setting method prior to switching	Switching signal	Initial value of UP/DOWN control	
		H61 = 0, 2	H61 = 1, 3
Setting other than UP/DOWN (F01, C30)	Frequency setting 2/ Frequency setting 1	Reference frequency by setting method prior to switching	
PID control	PID Cancel	Reference frequency by PID control (PID output)	
Multistep frequency	Multistep frequency selection	Reference frequency by setting method prior to switching	Reference frequency by previous UP/DOWN control
Communication	Link operation selection		

< UP/DOWN (Extended function selection) (H62) >

If UP/DOWN control is not selected for frequency setting 1 or 2 (F01 ≠ 7 and C30 ≠ 7) and, H61 = 3, by setting H62, the UP/DOWN control value can be assigned to the auxiliary frequency setting and torque command, etc. in the same way as that for the analog input terminal extension function selection (E61).

Refer to the description of function code E61 for details on operation.
(However, setting values 5, 19, 30, 33, 42, 45, and 48 cannot be selected.

[4] Frequency setting using digital input (option DI interface card) (F01 = 11)

The frequency setting with binary (8, 12 bits) or BCD code via option DI interface card (OPC-DI) is also available to be selected. Refer to the Digital Input Output Interface Card Instruction Manual.

FUNCTION
F Codes
E Codes
C Codes
P Codes
H Codes
A Codes
b Codes
r Codes
J Codes
d Codes
U Codes
y Codes
K Codes

[5] Frequency setting using pulse train input (F01 = 12)

■ Selecting the pulse train input format (d59)

By inputting serial pulses to PG interface card (OPC-PG, OPC-PG22) terminal [XA] and [XB], or to inverter control circuit terminal [X6] and [X7], a frequency proportional to the pulse frequency can be set. Specify the pulse train input method with d59. The pulse train sign/pulse train input, the forward rotation pulse/reverse rotation pulse, and the A and B phases with 90 degree phase difference (B phase lead, A phase lead). If the inverter is equipped with a dual system PG interface card or with a PG interface card for synchronous motors with sensor, the pulse train input function is disabled with terminals [X6] and [X7].

With PG interface cards equipped with dual system pulse input, the pulse train input terminal can be switched between PG interface card terminal [YA] and [YB]/terminal [XA] and [XB], allowing the frequency to be set with the "PG input switching "PG-SEL"" signal assigned to the digital input terminal.

📖 Refer to function code E01 to E09 (data = 83) for details on "PG-SEL".

The table below lists pulse train formats and their operations.

Pulse train input format selected by d59	Operation overview	PG interface card terminals	Terminal [X6], [X7]
0: Frequency and direction	The speed command is given to the inverter unit based on the pulse train input frequency, and the speed command polarity can be set with a pulse train sign.	[XA]: - polarity when ON + polarity when OFF [XB]: Pulse train	Input the pulse train by assigning "PIN" (E07 = 48) to terminal [X7]. The polarity will be positive when OFF, and negative when ON by assigning "SIGN" (E01 to 06, E08, E09 = 49) to other than terminal [X7]. The polarity will be positive if "SIGN" is not assigned. Terminal [X6] will be invalid if "PIN" is assigned to terminal [X6].
1: Forward and reverse pulse	Frequency/speed command according to the pulse train rate is given to the inverter. The forward rotation pulse gives a frequency/speed command with positive polarity, and a reverse rotation pulse, with negative polarity.	[XA]: Reverse rotation pulse [XB]: Forward rotation pulse	Input the pulse train by assigning "PIN" (E06, E07 = 48) to both terminal [X6] and [X7]. Terminal [X6] will be the reverse rotation pulse (A phase), and terminal [X7] will be the forward rotation pulse (B phase). The setting frequency will always be 0 Hz if "PIN" is not assigned to both terminal [X6] and [X7].
2: A, B phase 90° phase difference (B phase lead forward rotation)	Pulse trains generated by A and B phases with 90 degree phase difference give a frequency/speed command to the inverter based on their pulse rate and the phase difference (B phase advanced).	[XA]: A phase pulse [XB]: B phase pulse	Input the 90° phase difference pulse train by assigning "PIN" (E06, E07 = 48) to both terminal [X6] and [X7]. Terminal [X6] will be the A phase, and terminal [X7] will be the B phase. The setting frequency will always be 0 Hz if "PIN" is not assigned to both terminal [X6] and [X7].
3: A, B phase 90° phase difference (A phase lead forward rotation)			

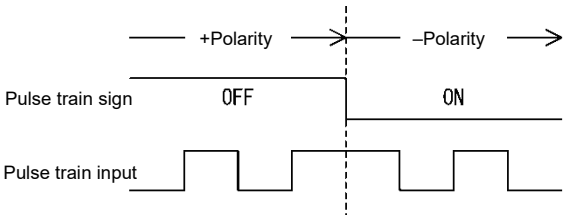

Data 0: Pulse train sign/pulse train input

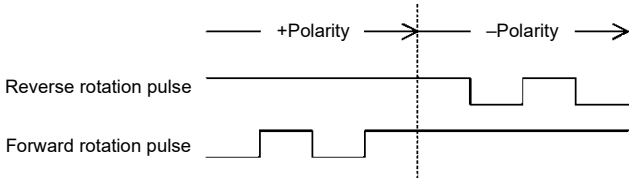

Data 1: Forward pulse/reverse pulse

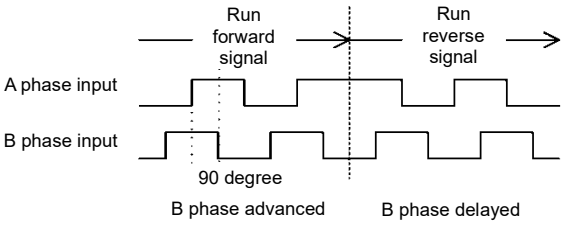

Data 2: A, B phase 90° phase difference (B phase lead)

■ **Pulse scaling factor 1 (d62), pulse scaling factor 2 (d63)**

For pulse train input, set the relationship between input pulse frequency and frequency setting value by function code d62 (Command (pulse train input) pulse scaling factor 1) and d63 (command (pulse train input) pulse scaling factor 2).

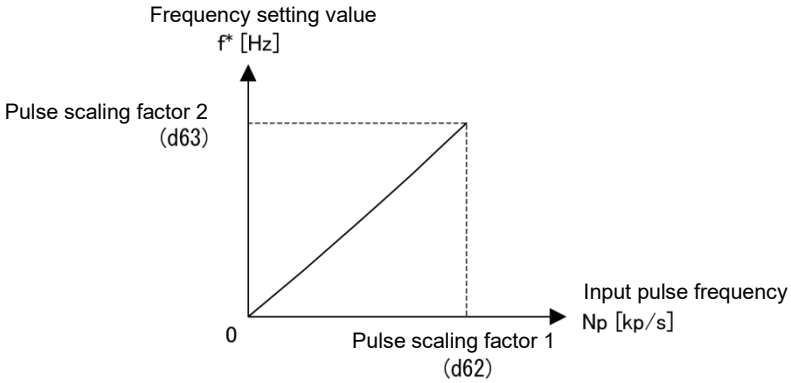

Relationship between input pulse frequency and frequency setting value

As shown in the above diagram, set input pulse frequency [kp/s] to function code d62 (command (pulse train input) pulse scaling factor 1) and set frequency setting value [Hz] (when the input pulse frequency becomes the value set to function code d62) to function code d63 (command (pulse train input) pulse scaling factor 2). At this time, the relationship formula of input pulse frequency to be entered and frequency setting value f* (or speed command value) is as follows:

$$f^* \text{ [Hz]} = Np \text{ [kp/s]} \times \frac{\text{Pulse scaling factor 2 (d63)}}{\text{Pulse scaling factor 1 (d62)}}$$

f^* [Hz]: Frequency setting value

Np [kp/s]: Input pulse frequency to be input
In the case of an A- and B-phase 90° phase difference, the frequency is not a value multiplied by 4.

Depending on the pulse train sign, polarity of the command is determined. Rotation direction of the motor is determined by the polarity of pulse train input and “FWD”/”REV” command. Relationship between pulse train input polarity and rotation direction is shown in the following table.

Relationship between pulse train input polarity and rotation direction

Polarity according to the pulse train input	Run command source	Rotational direction
+	“FWD” (Forward rotation command)	Forward
+	“REV” (Reverse rotation command)	Reverse rotation
-	“FWD” (Forward rotation command)	Reverse rotation
-	“REV” (Reverse rotation command)	Forward

■ Filter time constant (d61)

Set filter time constant for pulse train input. The larger the time constant, the slower the response. Specify the proper filter time constant taking into account the response speed of the machine (load). If the pulse is lower and frequency command fluctuates, set larger time constant.

■ Switching frequency setting

Switch Frequency setting 1 (F01) and Frequency setting 2 (C30) by the signal “Frequency setting 2/Frequency setting 1” “Hz2/ Hz1”, which was assigned to the external digital input terminal.

(Refer to Function code E01 to E09 (Data = 11) to find the details of “Hz2/ Hz1”.

Input signal “Hz2/ Hz1”	Frequency setting method to be selected
OFF	Frequency setting 1 (F01)
ON	Frequency setting 2 (C30)

F02 Operation method

Select the operation command setting method. Indicate instruction method of run/stop and rotation direction (forward/reverse rotation) for each setting method.

F02 data	Operation command setting method	
	Run/stop	Rotation direction command
0: Keypad operation (Rotation direction input: Terminal block)	RUN/STOP keys	“FWD”, “REV”
1: External digital input signal	“FWD”, “REV”, “DIR”, “HLD” , "FWD2", "REV2"	
2: Keypad operation (forward rotation)	RUN/STOP keys	Rotation direction command is unnecessary (Forward rotation operation only, reverse rotation operation disabled)
3: Keypad operation (reverse rotation)	RUN/STOP keys	Rotation direction command is unnecessary (Reverse rotation operation only, forward rotation operation disabled)

Digital input signal, “FWD”, “REV” needs to be assigned to terminals [FWD], [REV].
(Function code E98, E99 data = 98, 99)

Note

- F02 cannot be changed when “FWD” or “REV” is ON.
- When F02 = 0, only the “FWD” and “REV” functions are enabled with the rotation direction command, and the “FWD2” and “REV2” functions are disabled.
- If F02 = 1 and when assignment of terminal [FWD] or [REV] is changed from other function to “FWD” function or “REV” function, turn the terminal [FWD] and [REV] off in advance (motor may rotate due to change in the setting).

Tip Operation can be stopped with "FWD" and "REV", or with "FWD2" and "REV2" using the run command 2/1 "FR2 / FR1" switching function. This allows run commands to be issued remotely, or to be issued from the panel surface, etc. Refer to "Function code E01 to E09 (data = 87)" for details.

■ Forward rotation/reverse rotation selection "DIR"

Only when F02 = 1 external signal, it is possible to change the run command direction with the "forward rotation/reverse rotation "DIR" signal assigned to the digital input terminal.

Input signal "DIR"	"FWD"	"REV"	Run command direction
OFF	ON	OFF	Forward rotation
ON	ON	OFF	Reverse rotation
OFF	OFF	ON	Reverse rotation
ON	OFF	ON	Forward rotation
Not required	ON	ON	Stop command

■ Self-hold selection "HLD"

Self-hold can be applied to "FWD" and "REV" with the "Self-hold selection "HLD"" signal assigned to the digital input terminal. When "HLD" is ON, the inverter self-holds the "FWD" or "REV" signal, and when OFF, the hold state is released.

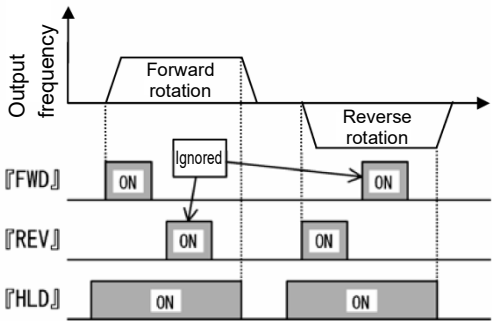

■ 2-wire operation

Two types of 2-wire operation can be configured regardless of whether "DIR" is used.

2-wire operation (1)	2-wire operation (2)
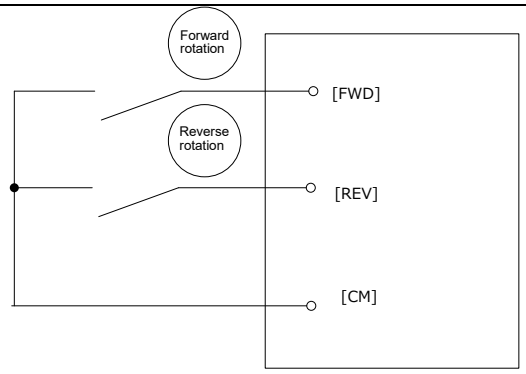	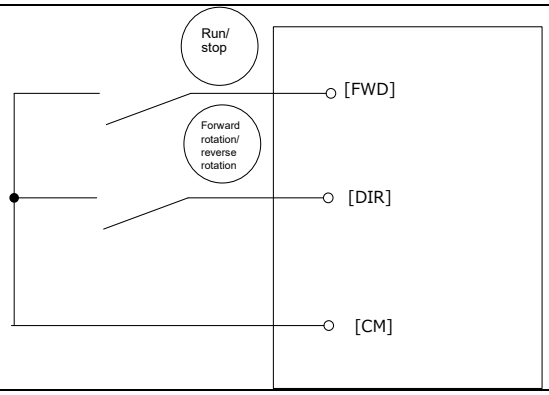
Forward rotation/stop: [FWD] Reverse rotation/stop: [REV]	Run/stop: [FWD] Forward rotation/reverse rotation: [DIR]

■ 3-wire operation

Two types of 3-wire operation can be configured regardless of whether “HLD” or “DIR” are used.

3-wire operation (1)	3-wire operation (2)
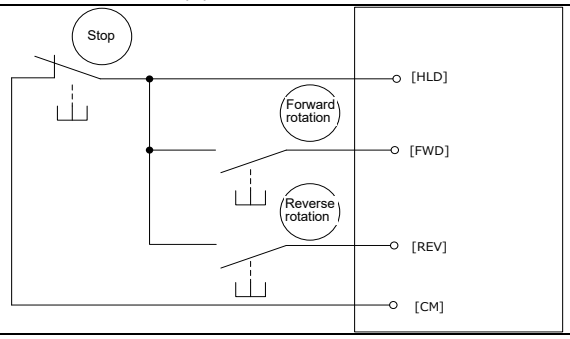	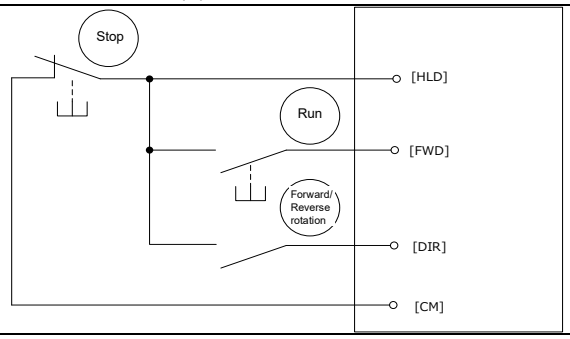
Forward rotation: [FWD] Reverse rotation: [REV] Stop: [HLD]	Run: [FWD] Forward rotation/reverse rotation: [DIR] Stop: [HLD]

Refer to Function code E01 to E09 (data = 6) for details on “HLD”.

In addition to these settings, run commands can be set using high priority setting methods (remote/local switching, communication, forward rotation/stop command 2 “FWD2” function, reverse rotation/stop command 2 “REV2” function, etc.) Refer to the block diagram in Chapter 8 “8.3 Operation Command Section” for details.

F03	Maximum output frequency 1

F03 specifies the maximum output frequency that the inverter outputs. When the device to be driven is set to rated or higher, the device may be damaged. Make sure to make an adjustment to design mode value of the machinery.

- Data setting range: 5.0 to 599.0 (Hz)

Control method	Maximum setting range	Remarks
V/f control (incl. dynamic torque vector control, V/f control with speed sensor)	599.0 Hz	Speed sensor upper limit: 100 kHz
Vector control with sensor (induction motors, permanent magnet synchronous motors)	599.0 Hz	Speed sensor upper limit: 100 kHz
Speed sensorless vector control (induction motors, permanent magnet synchronous motors)	599.0 Hz	

The speed sensor pulse frequency is limited to 100 kHz or less, and therefore it is not possible to output frequencies higher than this.

⚠WARNING

Inverter high-speed operation settings can be specified easily. If settings are changed, use the product after sufficiently checking the motor and machine specification.

Failure to observe this could result in injury or damage.

Note When changing maximum output frequency (F03) in order to make the operation frequency a larger value, change the frequency limiter (upper limit) (F15) as well.

F04, F05 F06	**Base frequency 1, rated voltage at base frequency 1** **Maximum output voltage 1** **Related function codes: H50, H51 Non-linear V/f 1 (Frequency, Voltage)** **H52, H53 Non-linear V/f 2 (Frequency, Voltage)** **H65, H66 Non-linear V/f 3 (Frequency, Voltage)**

Set the base frequency and base frequency voltage that are essential to operation of the motor. By combining related function codes H50 to H53, H65, and H66, it is possible to set non-linear V/f pattern (weak or strong voltage by arbitrary point) and perform setting of V/f characteristics that is suitable for the load.

Impedance of the motor becomes larger with high frequency, and when output voltage becomes less, output torque may be reduced. In order to prevent this, increase the voltage at high frequency by setting function code F06 (maximum output voltage 1). However, it is not possible to output voltage at or higher than the input power voltage of the inverter.

V/f point	Function code		Remarks
	Frequency	Voltage	
Maximum output frequency	F03	F06	Enabled only when V/f control selected (F42 = 0 and F37 = 0, 1)
Base frequency	F04	F05	
Non-linear V/f 3	H65	H66	Enabled only when V/f control selected (F42 = 0 and F37 = 0, 1)
Non-linear V/f 2	H52	H53	
Non-linear V/f 1	H50	H51	

<Setting example>

■ **Normal V/f pattern setting**

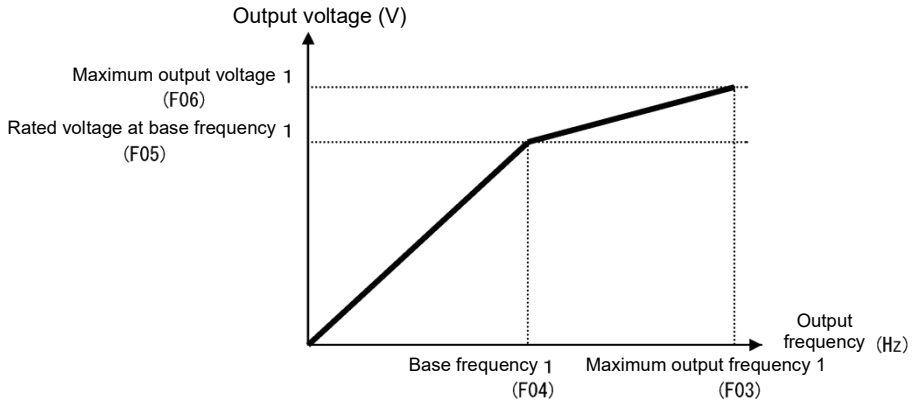

■ **Non-linear V/f pattern setting (3 points)**

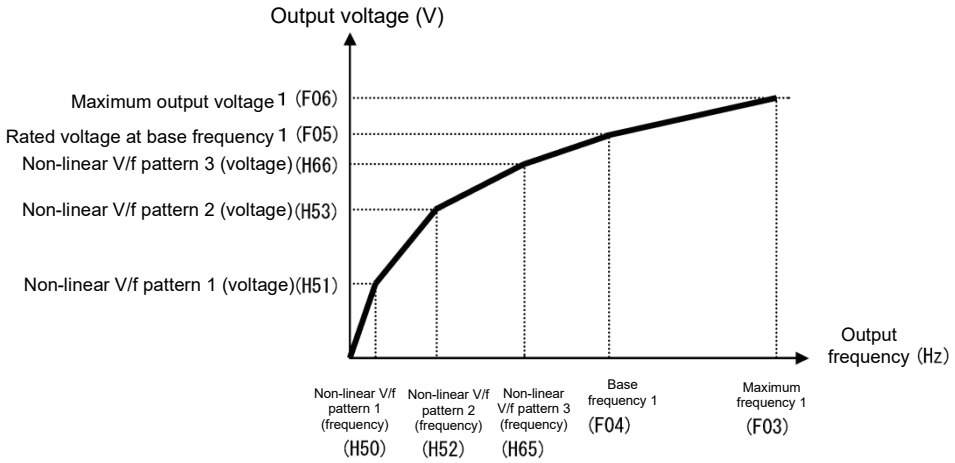

■ Base frequency (F04)

Set the data in accordance with rated frequency of the motor (given on the nameplate of the motor).

- Data setting range 5.0 to 599.0 (Hz)

■ Rated voltage at base frequency (F05)

Set the data to “0” in accordance with rated voltage of the motor (given on the nameplate of the motor).

- Data setting range: 0 : AVR disable
  80 to 240 (V) : AVR operation (at 200 V series)
  160 to 500 (V) : AVR operation (at 400V series)
- When data is set to “0”, the base frequency voltage becomes equivalent to inverter input voltage. When input voltage fluctuates, output voltage fluctuates as well (no AVR operation).
- When data is set to arbitrary voltage other than “0”, automatically keeps the output voltage constant (AVR operation). When control function such as auto torque boost, auto energy-saving operation, and slip compensation is used, it is necessary to adjust to the rated voltage (given on the nameplate of the motor) of the motor.
- By turning ON digital input AVR cancel “AVR-CCL” (E01 to E09 = 116)”, AVR is canceled, and the same operation as F05 = 0 is performed.

Note The voltage that the inverter can output is lower than the input voltage of the inverter. Appropriately set the voltage in accordance with the motor.

With vector control, current feedback control is performed. Current feedback control is used to control the current based on the difference between the motor induced voltage and the inverter output voltage. Consequently, if the inverter output voltage is not set to ensure that a higher voltage than the motor induced voltage is output, it will not be possible to perform control correctly. Generally speaking, the voltage difference is 20 V for the 200V series, and 40 V for the 400V series. The voltage that the inverter can output is equivalent to the input voltage of the inverter. Set the voltage appropriately based on the motor. When using a dedicated Fuji motor for vector control (VG motor), by setting VG motor (capacity: P02, motor type: P99), F04 and F05 are set automatically. If using a general-purpose motor to perform speed sensorless vector control, set the rated voltage for base frequency voltage 1 (F05). The above voltage difference is set with an induced voltage coefficient for vector control (P56). (Generally speaking, the initial value may be used.)

■ Non-linear V/f 1, 2, 3 (Frequency) (H50, H52, H65)

Set frequency at the arbitrary point of non-linear V/f pattern.

- Data setting range: 0.0 (Cancel), 0.1 to 599.00 (Hz)

Note When 0.0 is set, the setting becomes the pattern without using non-linear V/f pattern.

■ Non-linear V/f 1, 2, 3 (Voltage) (H51, H53, H66)

Set voltage at the arbitrary point of non-linear V/f pattern.

- Data setting range: 0 to 240 (V) : AVR operation (at 200V series)
  0 to 500 (V) : AVR operation (at 400V series)

■ Maximum output voltage 1 (F06)

Set the voltage at maximum output frequency 1 (F03).

- Data setting range: 80 to 240 (V) : AVR operation (at 200V series)
  160 to 500 (V) : AVR operation (at 400V series)

Note When rated voltage at base frequency (F05) is “0”, the data of non-linear V/f (H50 to H53, H65, and H66) and F06 becomes invalid (linear V/f for at or below base frequency, and constant voltage for at or higher than base frequency).

F07, F08	**Acceleration time 1, Deceleration time 1** **Related function codes:** **E10, E12, E14 Acceleration time 2, 3, 4** **E11, E13, E15 Deceleration time 2, 3, 4** **H07 Curve acceleration/deceleration** **H11 Deceleration mode** **H56 Deceleration time for forced stop** **H54, H55 Acceleration/deceleration time (Jogging)** **H57 to H60 Acceleration/deceleration range No. 1, No.2 S-curve range** **E61 to E63, E66 Analog input (Extension function selection)** **d86 Acceleration/deceleration time filter time constant**

Acceleration time sets the time taken by the output frequency to reach the maximum output frequency from 0Hz, and deceleration time sets the time taken by the output frequency to reach 0 Hz from the maximum frequency.

• Data setting range: 0.00 to 6000 (s)

V/f control

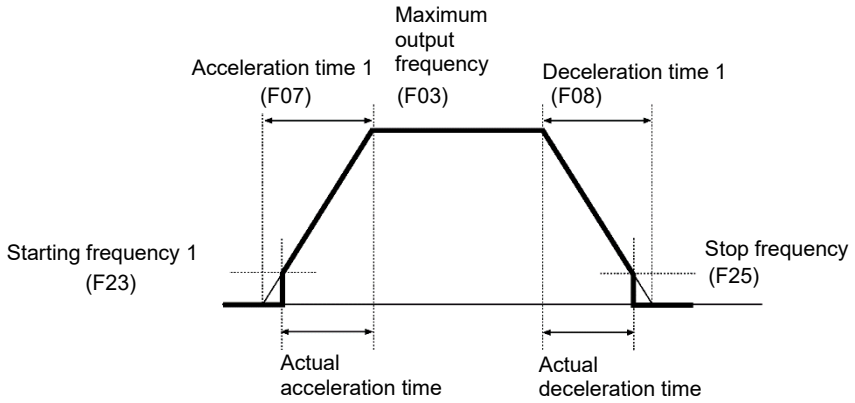

Speed sensorless vector control

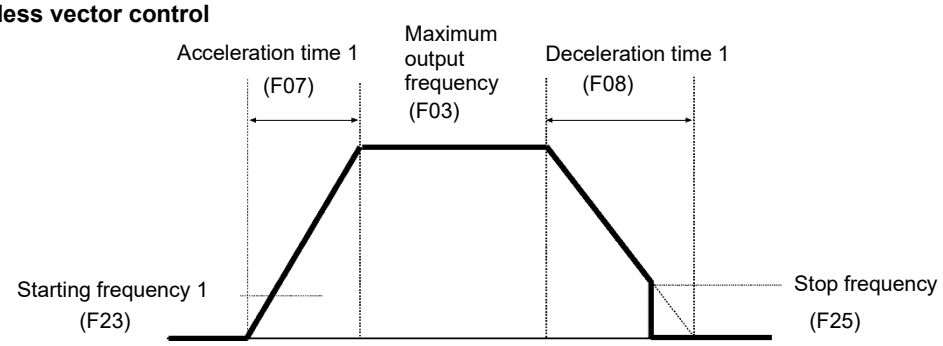

Vector control with speed sensor

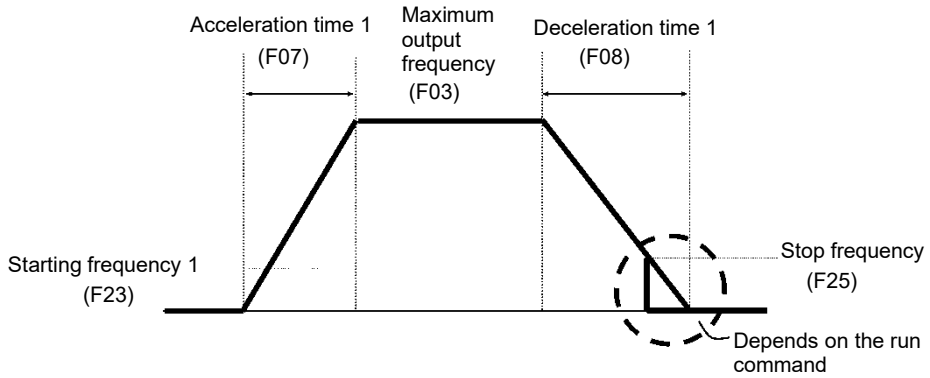

FUNCTION
F Codes
E Codes
C Codes
P Codes
H Codes
A Codes
b Codes
r Codes
J Codes
d Codes
U Codes
y Codes
K Codes

■ Acceleration/deceleration time

Type of acceleration/deceleration time	Function code		Select ACC/DEC time (📖 Function code E01 to E09)		
	Acceleration time	Deceleration time			
ACC/DEC time 1	F07	F08	"RT2"	"RT1"	Changes are made with acceleration/deceleration selection "RT1" and "RT2" (data = 4, 5). When there is no assignment, acceleration/deceleration time 1 (F07, F08) are valid.
			OFF	OFF	
ACC/DEC time 2	E10	E11	OFF	ON	
ACC/DEC time 3	E12	E13	ON	OFF	
ACC/DEC time 4	E14	E15	ON	ON	
When performing jogging	H54	H55	When ready for jogging "JOG" is ON, switch to the mode with which jogging operation is possible (data = 10) (📖 function code C20).		
When performing forced stop	-	H56	forced stop "STOP" or "STOP-T" command OFF causes the motor to decelerate to a stop in accordance with the deceleration time for forced stop (H56). After the motor stops, the inverter enters the alarm state with the alarm Er6 displayed (data = 30).		

Note If function code H11 (Deceleration mode) is set to Coast to stop (= 1) when a run command is turned OFF, the motor coasts to a stop.

■ Curve acceleration/deceleration (H07)

Select acceleration/deceleration pattern (change pattern of frequency) at acceleration/deceleration.

H07 data	Curve acceleration/ deceleration	Enable		Function code
0	Disable (Linear acceleration/deceleration)	Acceleration/deceleration with constant acceleration		-
1	S-curve acceleration/deceleration (Weak)	Smoothen the speed change and reduce shock when starting acceleration and right before the speed becomes constant, as well as when starting deceleration and right before the deceleration stops.	Weak:Fix acceleration/deceleration change rate to 5% of the maximum output frequency within each S-curve range.	-
2	S-curve acceleration/deceleration (Arbitrary)		Arbitrary:It is possible to set acceleration/deceleration change rate arbitrarily within each S-curve range.	H57, H58 H59, H60
3	Curve acceleration/deceleration	Linear acceleration/deceleration (constant torque) at or below base frequency and acceleration becomes gradually slower at or higher than the base frequency, and acceleration/deceleration with constant load rate (rated output). It is possible to accelerate/decelerate with the maximum capability.		-

S-curve acceleration/deceleration

For the purpose of decreasing the shock on the load machine side, smoothen the speed change at the start of acceleration and right before it becomes constant speed, and at the start of deceleration and right before the stop of deceleration. As for s-curve acceleration/deceleration values, fix with 5 % for S-curve acceleration/deceleration (weak), and for S-curve acceleration/deceleration (arbitrary), it is possible to set individually for each 4 locations by function codes H57 to 60. The specified acceleration/deceleration time determines acceleration of linear part and the actual acceleration/deceleration time becomes longer than the specified acceleration /deceleration time.

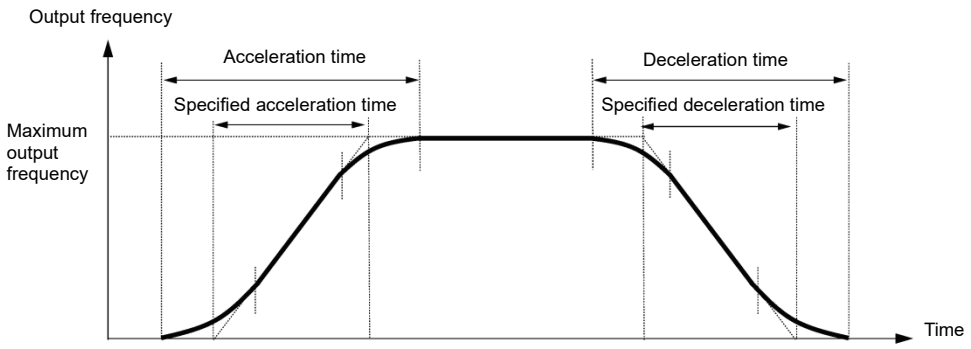

	At the start of acceleration	At the end of acceleration	At the start of deceleration	At the end of deceleration
S-curve (weak)	5%	5%	5%	5%
S-curve (arbitrary) Setting range: 0 to 100%	H57 When accelerating No. 1 S-curve range (when starting)	H58 When accelerating No. 2 S-curve range (when finished)	H59 When decelerating No. 1 S-curve range (when starting)	H60 When decelerating No. 2 S-curve range (when finished)

Acceleration/deceleration time

<S-curve acceleration/deceleration (Weak): When frequency change is 10 % or higher than the maximum output frequency>

Acceleration or deceleration time (s) = (2 × 5/100 + 90/100+ 2 × 5/100) × reference acceleration or deceleration time
= 1.1 × reference acceleration or deceleration time

<S-curve acceleration/deceleration (Arbitrary: When 10 % at the start, 20 % at the end): When frequency change is 30 % or higher than the maximum output frequency.>

Acceleration or deceleration time (s) = (2 × 10/100 + 70/100 + 2 × 20/100) × (reference acceleration or deceleration time)
= 1.3 × (reference acceleration or deceleration time)

Curve acceleration/deceleration

This is a pattern to perform linear acceleration/deceleration (rated torque) at or below base frequency and acceleration becomes gradually slower at or higher than the base frequency, and acceleration/deceleration with constant load rate (rated output).

It is possible to accelerate/decelerate with the maximum capability of the motor to be driven by the inverter.

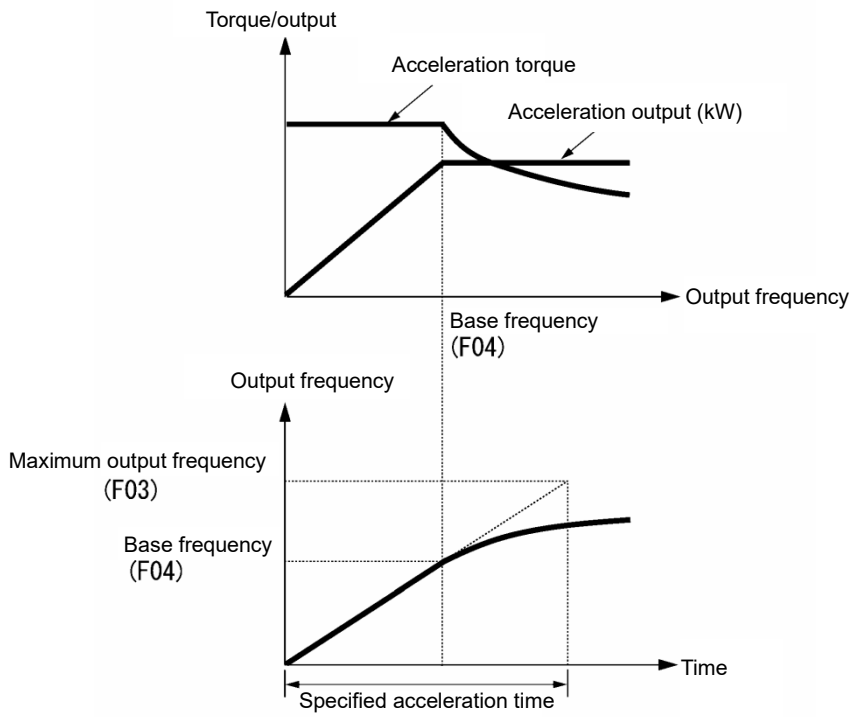

The diagram on the left shows pattern at acceleration.
This is the same as at deceleration.

Note
- When S-curve acceleration/deceleration and curve acceleration/deceleration is selected by curve acceleration/deceleration H07, the actual acceleration/deceleration time becomes longer than the set value.
- If acceleration/deceleration time is set shorter than necessary, current limiting function, torque limit or anti-regenerative function may operate and acceleration/deceleration time may become longer than the set value.

■ Acceleration/deceleration filter time constant (d86) (dedicated setting for V/f control)

Sets the primary delay filter time constant for outputting the output frequency lamp function when accelerating and decelerating. Specify this setting if mechanical problems arise due to overshoot or undershoot when reaching the target frequency or when stopping. By setting a large value, the rate of output frequency change stabilizes, but responsiveness deteriorates.

This setting is effective only under V/f control (F42 = 0 to 2). If performing other than V/f control (F42 = 0 to 2), use a speed control speed command filter (d01, A43, b43, r43).

- Data setting range: 0.000 (filter disabled): 0.001 to 5.000 (s)

■ Acceleration/deceleration time ratio setting with analog input (E61 to E63, E66)

By setting “12: Acceleration/deceleration time ratio” for analog input terminal [12], [C1] (C1 function) (V3 function), or [V2], the applicable analog input (0 to 100%) is multiplied by the selected acceleration/deceleration time in real time to set the acceleration/deceleration time ratio. This is also valid for S-curve acceleration/deceleration and curve acceleration/deceleration. This setting is reflected immediately even during acceleration and deceleration. The data range is limited to plus polarity, and the minus side is recognized as 0. This setting is not reflected when performing jogging operation or when performing a forced stop.

F09	Torque boost 1 (Refer to F37)

For details of torque boost 1 setting, refer to the section of function code F37.

F10 to F12	Electronic thermal overload protection for motor 1 (motor characteristics selection, operation level, thermal time constant)

Sets the motor temperature characteristics (characteristic selection (F10), thermal time constant (F12)) and the operation level (F11) for motor overload detection (electronic thermal overload relay function based on inverter output current).

If a motor overload is detected, the inverter is shut off to protect the motor, and motor overload alarm OL 1 occurs.

Note If the electronic thermal overload relay function is set incorrectly, the motor will not be protected, and may burn out.

Note Temperature characteristics of motor is used for motor overload early warning “OL” as well. Even if only overload early warning is used, it is necessary to set temperature characteristics of the motor (F10, F12) (📖 Function code E34)

For disabling motor overload alarm, set F11 = 0.00 (Disable).

Note If using a dedicated Fuji motor for vector control, motor overheat protection using an NTC thermistor will activate, eliminating the need for an electronic thermal overload relay. Set F11 to 0.00 A (disabled), and connect the motor NTC thermistor to terminal [V2]. Furthermore, for PTC thermistor built-in motor, by connecting PTC thermistor to terminal [V2], it is possible to protect the motor. Refer to H26 to find the details.

■ Motor characteristics selection (F10)

F10 selects characteristics of cooling system of the motor.

F10 data	Function
1	Self-cooling fan of general-purpose motor (Self-cooling) (When operating with low frequency, cooling performance decreases.)
2	Inverter-driven motor, High-speed motor with separately powered cooling fan (Keep constant cooling capability irrespective to output frequency)

The electronic thermal operation characteristics diagram when F10 = 1 is set is shown below. The characteristics coefficient α1 to α3 and the switch coefficient f2, f3 differ depending on the characteristics of the motor.

Each coefficient that is set by motor characteristics that is selected by motor capacitance and motor selection (P99) is shown in the tables.

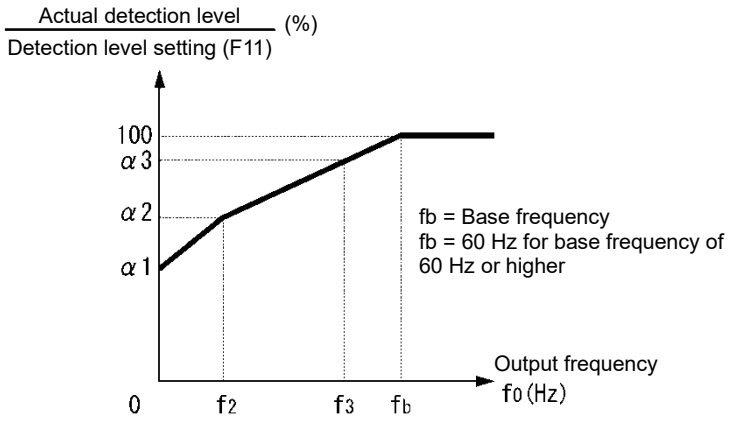

Characteristics diagram of motor cooling system

When P99 = 0, 4, or 5 (motor characteristics 0, other, motor characteristics 5)

Motor capacity	Thermal time constant τ	Thermal time constant setting Standard current value Imax	Characteristics coefficient switch frequency		Characteristics coefficient		
			f_2	f_3	α1	α2	α3
0.4, 0.75 kW	5 min	Continuous allowance current value x 150 %	5 Hz	7 Hz	75 %	85 %	100 %
1.5 to 3.7 kW					85 %	85 %	100 %
5.5 to 11 kW				6 Hz	90 %	95 %	100 %
15 kW				7 Hz	85 %	85 %	100 %
18.5, 22 kW				5 Hz	92 %	100 %	100 %
30 to 45 kW	10 min		Base frequency x 33 %	Base frequency x 83 %	54 %	85 %	95 %
55 to 90 kW					51 %	95 %	95 %
110 kW or more					53 %	85 %	90 %

FUNCTION
F Codes
E Codes
C Codes
P Codes
H Codes
A Codes
b Codes
r Codes
J Codes
d Codes
U Codes
y Codes
K Codes

When P99 = 1 or 3 (motor characteristic 1, 3)

Motor capacity	Thermal time constant τ	Thermal time constant setting Standard current value Imax	Characteristics coefficient switch frequency		Characteristics coefficient		
			f_2	f_3	α1	α2	α3
0.2 to 22 kW	5 min	Continuous allowance current value x 150 %	Base frequency x 33 %	Base frequency x 33 %	69 %	90 %	90 %
30 to 45 kW	10 min			Base frequency x 83 %	54 %	85 %	95 %
55 to 90 kW					51 %	95 %	95 %
110 kW or more					53 %	85 %	90 %

When F10=2 is set, cooling effect by output frequency will not decrease, therefore, overload detection level becomes constant value (F11) without decrease.

If P99 = 20, 21, 22, or 23 (permanent magnet synchronous motor)

Motor capacity	Thermal time constant τ	Thermal time constant setting Standard current value Imax	Characteristics coefficient switch frequency		Characteristics coefficient		
			f_2	f_3	α1	α2	α3
90 kW or lower	5 min	Continuous allowance current value x 150 %	Base frequency F04 x 33%	Base frequency F04 x 83%	53%	85%	95%
110 kW or more	10 min				53%	85%	90%

■ **Operation level (F11)**

F11 sets operation level of electronic thermal.

Normally, set the motor continuous allowance current (in general, about 1.0 to 1.1 times of motor rated current) when operating at base frequency in ampere units.

For disabling electronic thermal as disable, set F11 = 0.00: Disable.

■ **Thermal time constant (F12)**

F12 sets thermal time constant of the motor. For overload detection level that is set by F11, set the electronic thermal operation time when 150 % of current is flowing continuously. Thermal time constant of general-purpose motor of Fuji Electric and general motors is 5 minutes for 22 kW or lower, and 10 minutes for 30kW or higher.

- Data setting range: 0.5 to 75.0 (min)

(Example) When the data of function code F12 is set to “5” (5 minutes).

As shown in the figure below, when 150 % of current of operation level that was set flows for 5 minutes, motor overload (alarm OL 1) protection function will operate. In addition, with 120 %, it operates after 12.5 minutes.

The time when alarm actually occurs is shorter than the set data because the time until the current reaches 150 % level after exceeding the continuous allowance current (100 %) is considered.

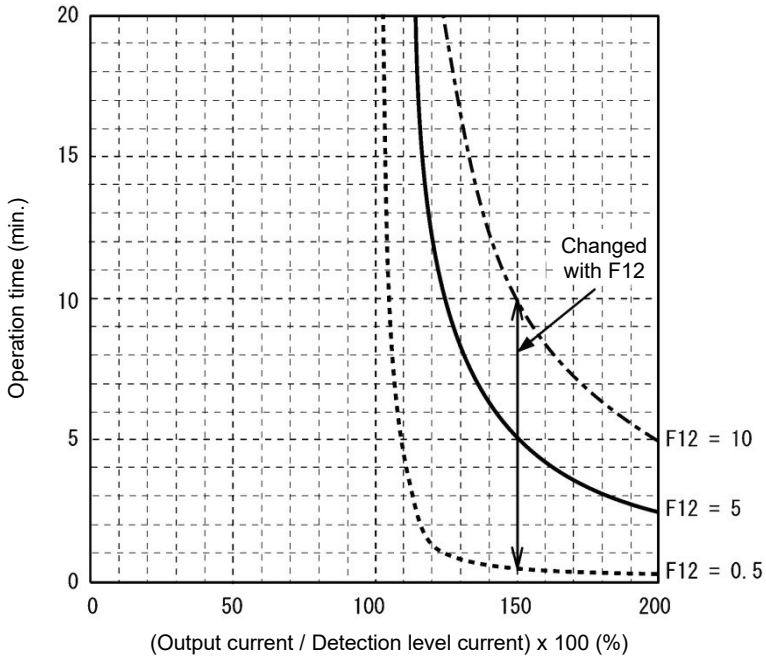

Example of current-operation time characteristics

FUNCTION
F Codes
E Codes
C Codes
P Codes
H Codes
A Codes
b Codes
r Codes
J Codes
d Codes
U Codes
y Codes
K Codes

F14	**Restart mode after momentary power failure (operation selection)** **Related function codes:** **H13 (Restart timer)** **H14 (frequency lowering rate)** **H15 (Continuous running level)** **H16 (Allowable momentary power failure time)** **H92 Continuous running at the momentary power failure (P)** **H93 Continuous running at the momentary power failure (I)**

Sets the operation (trip operation or restart operation method, etc. following power restoration) when a momentary power failure occurs.

■ **Restart mode after momentary power failure (Mode selection) (F14)**

V/f control (F42 = 0, 1, 2), speed sensorless vector control (induction motor) (F42 = 5)

F14 data	Operation details	
	Without auto search	With auto search
0: Trip immediately	When momentary power failure occurs while operating the inverter, and at the time when undervoltage is detected by the DC link bus voltage of the inverter, undervoltage alarm LU is outputted, the inverter output shuts down, and the motor coasts to a stop.	
1: Trip after a recovery from power failure	When momentary power failure occurs while operating the inverter, and at the time when undervoltage is detected by the DC link bus voltage of the inverter, the inverter output shuts down and the motor coasts to stop, but the undervoltage alarm will not be output. When auto-started from momentary power failure, undervoltage alarm LU is output.	
2: Trip after momentary deceleration is stopped	As soon as the DC link bus voltage drops below the continuous running level due to a momentary power failure, decelerate-to-stop control is invoked. Decelerate-to-stop control regenerates kinetic energy from the load's moment of inertia, slowing down the motor and continuing the deceleration operation. After decelerate-to-stop operation, an undervoltage alarm LU is issued.	
3: Continue to run (for heavy inertia load or general load)	As soon as the DC link bus voltage drops below the continuous running level due to a momentary power failure, decelerate-to-stop control is invoked. Decelerate-to-stop control regenerates kinetic energy from the load's moment of inertia, slowing down the motor, and operation is continued to wait for auto-restarting. If there is not enough energy for regeneration and when undervoltage is detected, the inverter output shuts down and the motor coasts to a stop.	
	If run command is entered at auto-restarting, restart from the frequency of when undervoltage is detected.	If run command is entered at auto-restarting, auto search is performed, motor speed is estimated, and restart from the frequency.
	This setting is most suitable for the fan with large inertia moment of load.	
4: Restart from frequency at power failure (for general load)	When momentary power failure occurs while operating the inverter, and at the time when undervoltage is detected by the DC link bus voltage of the inverter, the inverter output shuts down, and the motor coasts to a stop.	
	If run command is entered at auto-restarting, restart from the frequency of when undervoltage is detected.	If run command is entered at auto-restarting, auto search is performed, motor speed is estimated, and restart from the frequency.
	This setting is most suitable for cases where the load moment of inertia is large, and the motor speed drop is minimal even when the motor coasts to a stop following a momentary power failure (fans, etc.)	
5: Restart from starting frequency	When momentary power failure occurs while operating the inverter, and at the time when undervoltage is detected by the DC link bus voltage of the inverter, the inverter output shuts down, and the motor coasts to a stop.	
	If run command is entered at auto-restarting, restart from the starting frequency that was set by function code F23.	If run command is entered at auto-restarting, auto search is performed, motor speed is estimated, and restart from the frequency.
	This setting is most suitable for the case (pump etc.) when load inertia moment is small, when the load is heavy, and motor speed decreases up to 0 in a short time after the motor coasts to a stop due to momentary power failure.	
With auto search: Auto search is selected by starting mode selection “STM” ON or H09 (d67) = 1 or 2. Refer to function code H09 and d67 (Starting mode) to find the detail of starting mode selection “STM” ON auto search.		

⚠WARNING

When momentary power failure restart operation (F14 = 3 to 5) is selected, operation will resume automatically at auto-restarting. Design your machinery so that safety is ensured even at restarting.

Failure to observe this could result in an accident.

Speed sensorless vector control (permanent magnet synchronous motor) (F42 = 15)

F14 data	Operation details
0: Trip immediately	When momentary power failure occurs while operating the inverter, and at the time when undervoltage is detected by the DC link bus voltage of the inverter, undervoltage alarm LU is outputted, the inverter output shuts down, and the motor coasts to a stop.
1: Trip after a recovery from power failure	When momentary power failure occurs while operating the inverter, and at the time when undervoltage is detected by the DC link bus voltage of the inverter, the inverter output shuts down and the motor coasts to stop, but the undervoltage alarm will not be output. Undervoltage alarm LU is output when the power is restored following a momentary power failure.
2: Trip after momentary deceleration is stopped	As soon as the DC link bus voltage drops below the continuous running level due to a momentary power failure, decelerate-to-stop control is started. Decelerate-to-stop control regenerates kinetic energy from the load's moment of inertia, slowing down the motor and continuing the deceleration operation. An LU alarm is output after the motor decelerates and stops.
3: Continue to run (for heavy inertia load or general load)	Continue to run control is started the moment a momentary power failure occurs while the inverter is running, and the inverter DC intermediate circuit voltage drops to or below the continue to run level. With continue to run control, kinetic energy for the load moment of inertia is regenerated as the motor decelerates in order to continue operation while waiting for power to be restored. If the regenerated energy is low and undervoltage is detected, inverter output is shut off, and the motor coasts to a stop. If a run command has been input when the power is restored, auto search is performed to estimate the motor speed, and operation resumes from that frequency. This setting is most suited to applications such as large fans with large load moment of inertia.
4: Restart from frequency at power failure (for general loads) 5: Restart from starting frequency	The operation is the same for either F14 = 4 or 5. When momentary power failure occurs while operating the inverter, and at the time when undervoltage is detected by the DC link bus voltage of the inverter, the inverter output shuts down, and the motor coasts to a stop. If run command is entered at auto-restarting, auto search is performed, motor speed is estimated, and restart from the frequency.

FUNCTION
F Codes
E Codes
C Codes
P Codes
H Codes
A Codes
b Codes
r Codes
J Codes
d Codes
U Codes
y Codes
K Codes

V/f control with speed sensor (F42 = 3), dynamic torque vector control with speed sensor (F42 = 4), vector control with speed sensor (F42 = 6, 16)

F14 data	Operation details
0: Trip immediately	When momentary power failure occurs while operating the inverter, and at the time when undervoltage is detected by the DC link bus voltage of the inverter, undervoltage alarm LU is outputted, the inverter output shuts down, and the motor coasts to a stop.
1: Trip after a recovery from power failure	When momentary power failure occurs while operating the inverter, and at the time when undervoltage is detected by the DC link bus voltage of the inverter, the inverter output shuts down and the motor coasts to stop, but the undervoltage alarm will not be output. When auto-started from momentary power failure, undervoltage alarm LU is output.
2: Trip after momentary deceleration is stopped	As soon as the DC link bus voltage drops below the continuous running level due to a momentary power failure, decelerate-to-stop control is invoked. Decelerate-to-stop control regenerates kinetic energy from the load's moment of inertia, slowing down the motor and continuing the deceleration operation. After decelerate-to-stop operation, an undervoltage alarm LU is issued.
3: Continue to run	As soon as the DC link bus voltage drops below the continuous running level due to a momentary power failure, decelerate-to-stop control is invoked. Decelerate-to-stop control regenerates kinetic energy from the load's moment of inertia, slowing down the motor, and operation is continued to wait for auto-restarting. If there is not enough energy for regeneration and when undervoltage is detected, the inverter output shuts down and the motor coasts to a stop. If run command is entered at recovery from power failure, restart from the motor speed detected with the speed sensor.
4: Restart from frequency at power failure 5: Restart from starting frequency	The operation is the same for either F14 = 4 or 5. When momentary power failure occurs while operating the inverter, and at the time when undervoltage is detected by the DC link bus voltage of the inverter, the inverter output shuts down, and the motor coasts to a stop. If run command is entered at recovery from power failure, restart from the motor speed detected with the speed sensor.

■ **Restart mode after momentary power failure (Basic operation: Without auto search setting)**

When inverter detected that DC link bus voltage becomes at or drops below undervoltage level while operating, it is judged as a momentary power failure. When load is light and momentary power failure is very short, momentary power failure may not be detected and motor operation might be continued because DC link bus voltage does not drop so much.

When inverter judges the state as momentary power failure, returns to momentary power failure restart mode and prepares for restart. After power is auto-restarted, the inverter becomes at inverter ready to run state after elapse of initial charging time. At momentary power failure, power of external circuit (relay circuit etc.), which controls the inverter, decreases as well, and run command may be turned off. Therefore, when the inverter becomes at inverter ready to run state, wait 2 seconds for input of run command. When input of run command is confirmed within 2 seconds, initiate restarting according to F14 (mode selection). When there is no input of run command at run command input waiting state, momentary power failure restart mode will be released and start from normal starting frequency. Therefore, input run command within 2 seconds after auto-restarting or hold run command by off-delay timer or mechanical latch relay.

In case of F02=0 (run command from keypad and rotation direction command determined by terminal), it operates in the same way as above. For rotation direction fixed mode (F02 = 2, 3), run command is held within the inverter, therefore, it restarts immediately at inverter ready to run state.

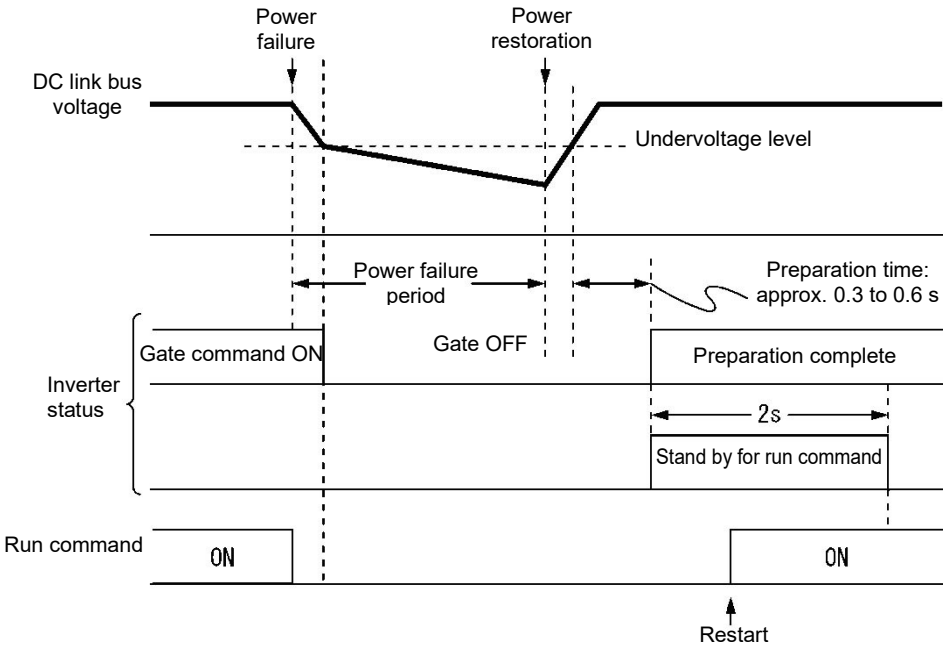

Note

- At auto-restarting, inverters waits 2 seconds for input of run command, however, if allowable momentary power failure time (H16) is elapsed after the state is judged as power failure, the state of run command input waiting for 2 seconds will be canceled and normal starting operation is performed.
- When coast to stop command “BX” is entered during power failure, momentary power failure restart waiting state is released and return to normal run mode, and when run command is inputted, start from normal starting frequency.
- Detection of momentary power failure within the inverter is performed by detecting DC link bus voltage drop of the inverter. With the structure in which a magnetic contactor is equipped on the output side of the inverter, there will be no operation power of the magnetic contactor at momentary power failure and the magnetic contactor becomes at open state. When the magnetic contactor becomes open, connection of inverter and motor is released and load of the inverter is shutdown. Therefore, it becomes difficult to decrease DC link bus voltage of the inverter and it may not be judged as a momentary power failure. If this is the case, momentary power failure restart will not be performed normal. As a countermeasure against this case, by connecting auxiliary contact signal of the magnetic contactor to the interlock signal “IL” it is possible to detect momentary power failure without fail.

  Function code E01 to E09 (data = 22)

Terminal command “IL”	Meaning
OFF	No momentary power failure has occurred.
ON	A momentary power failure has occurred. (Restart after a momentary power failure enabled) Restart mode after momentary power failure (mode selection)

When motor speed decreases during momentary power failure, and when restarting from frequency of before momentary power failure after power is recovered (auto-restarting), current limiter becomes active and output frequency of the inverter decreases automatically. When output frequency and motor rotation speed synchronize, the speed is accelerated up to the original output frequency. Refer to the figure below. However, it is necessary to enable instantaneous overcurrent limiting (H12 = 1) to bring in synchronization of the motor.

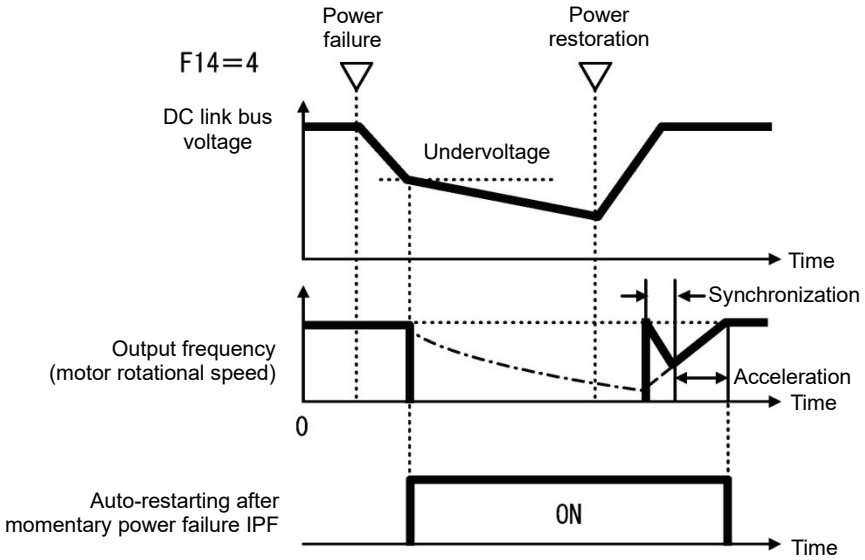

- Auto-restarting after momentary power failure “IPF”

During momentary power failure auto-restarting “IPF” signal is turned on until returning to original frequency after auto-restarting after momentary power failure occurred. When “IPF”: is turned ON, motor speed decreases, therefore, take necessary measures. (🕮 Function codes E20 to E24, E27 (data = 6))

■ **Restart mode after momentary power failure (Basic operation: With auto search setting)**

Auto search is not performed normally if there is residual voltage of the motor.

Therefore, it is necessary to secure the time until residual voltage runs out.

Restart mode after momentary power failure secures the necessary time with function code H46 starting mode (auto search delay time 2). Even if starting conditions are satisfied, the inverter does not start unless auto-search delay time elapses after inverter goes into OFF state. The inverter starts after elapse of auto search delay time. (🕮 Function codes H09, d67)

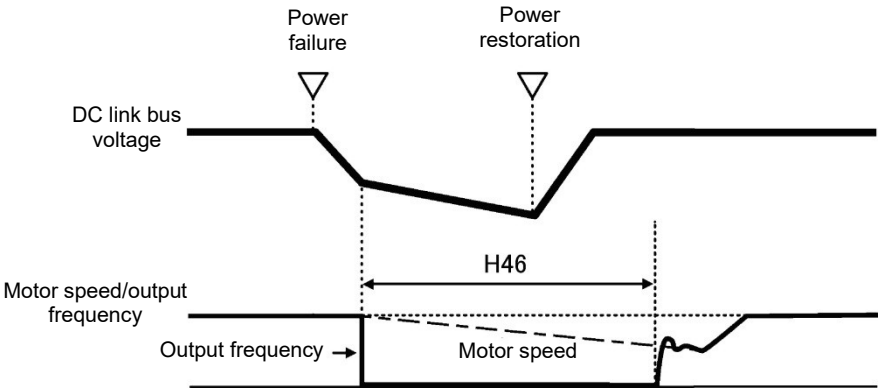

Note

- When operating auto search, it is necessary to perform auto-tuning in advance.
- When the estimated speed exceeds the maximum output frequency or the upper limit frequency, the inverter disables auto search and starts running the motor with the maximum output frequency or the upper limit frequency, whichever is lower.
- During auto search, if an overcurrent or overvoltage trip occurs, the inverter will restart the auto search.
- Use 60 Hz or below for auto search
- Note that auto search may not fully provide the performance depending on load conditions, motor parameters, wiring length, and other external factors.
- When output circuit filter OFL-□□□-2, -4 is equipped on the output side of the inverter, auto search must be disabled. Use OFL-□□□-□A type.
- Do not set d67 to 0 if using a permanent magnet synchronous motor.

■ **Restart mode after momentary power failure (Allowable momentary power failure time) (H16)**

Sets the maximum time from when momentary power failure (undervoltage level) occurs until restart (setting range: 0.0 to 30.0 s). Set coast to stop time which is allowable for machine and equipment. Momentary power failure restart operation should be performed within the specified time, however, if the set time is exceeded, the inverter judges the state as a power shut down, and then operates as powering on again without performing momentary power failure restart operation.

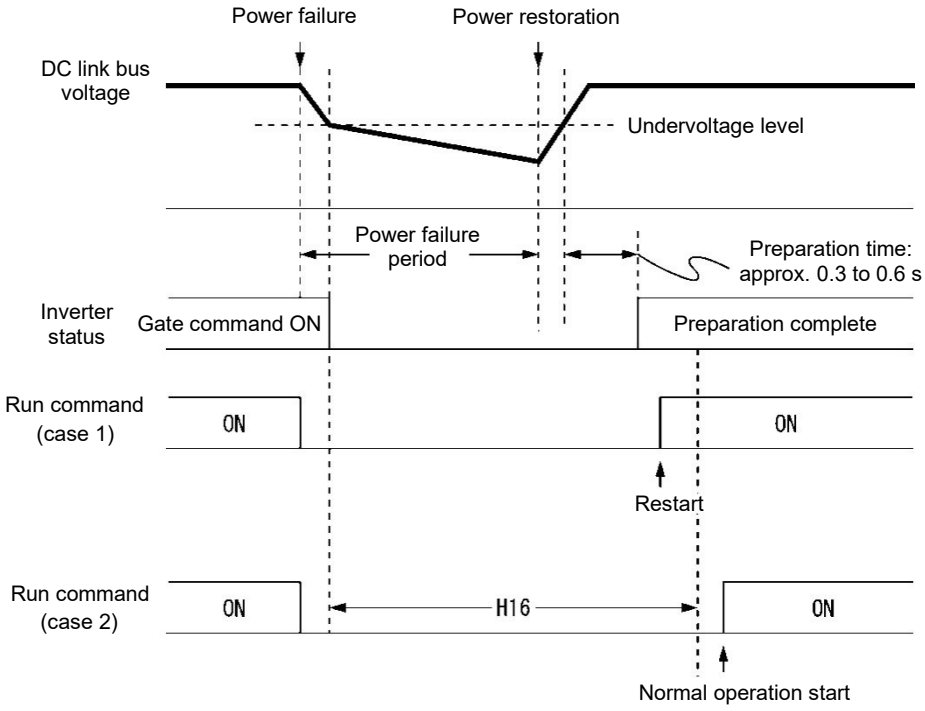

When allowable momentary power failure time (H16) is set to “999”, momentary power failure restart is performed until DC link bus voltage decreases by momentary power failure restart allowance voltage (50 V for 200V series, 100 V for 400V series), however, if the voltage becomes at or below the momentary power failure allowance voltage, the state is judged as a power shut down. As a result, the inverter operates as powering ON again without performing momentary power failure restart operating.

Power supply voltage	Allowance voltage of momentary power failure restart
200 V	50 V
400 V	100 V

Note The time until voltage decreases to the momentary power failure restart allowance voltage from undervoltage differs greatly depending on the inverter capacity and with/without option.

■ **Restart mode after momentary power failure (Restart timer) (H13) (Exclusive to V/f control for IM)**

H13 set the time until restart is performed after momentary power failure occurred. (At auto search setting, use H46 (auto search holding time 2)).

Restarting at the state when residual voltage of the motor is high, inrush current becomes greater or temporarily becomes at regeneration state, and overcurrent alarm may occur. For security reason, in order to restart after residual voltage is reduced to some extent, adjust H13. Even if auto-restarted, restart cannot be performed until the holding time (H13) elapses.

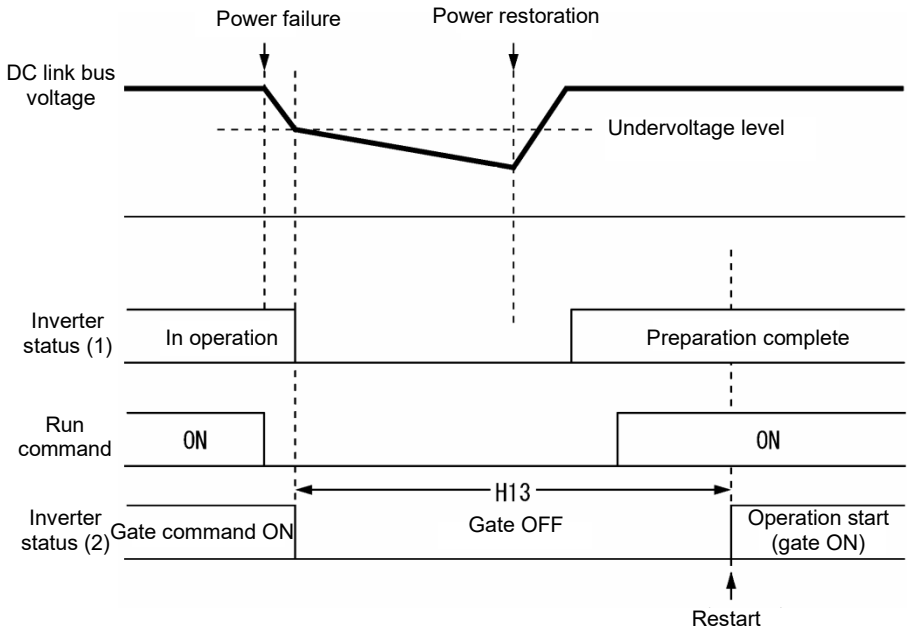

Factory default: At the factory default state, setting is performed so that it is appropriate to the standard motor (refer to Table 5.2-1 Factory default settings by inverter capacity). Basically, there is no need to modify the default setting. However, when problems occur due to the long holding time or decrease in flow rate of pump becomes significant, change to about half of the standard value and make sure that alarm etc. will not occur.

■ **Restart Mode after Momentary Power Failure (H14) (frequency lowering rate in Hz/s)**

At momentary power failure restart operation, when inverter output frequency and motor rotation speed does not synchronize, overcurrent occurs and current limiter will operate. When current limit is detected, automatically decrease the output frequency and synchronize with the motor rotation speed. H14 sets the slope of lowering output frequency (frequency lowering rate in Hz/s).

H14 data	Output frequency lowering operation
0.00	Decrease by the selected deceleration time.
0.01 to 100.00 (Hz/s)	Decrease by the lowering rate that is set by H14.
999	Depending on the PI regulator of current limiting processing (PI constant is fixed value within the inverter), the rate will decrease.

Note When frequency lowering rate is increased, regeneration operation is performed at the moment when output frequency of the inverter and rotation speed of motor synchronize, and overvoltage trip may occur. When frequency lowering rate is reduced, the time until output frequency of the inverter and motor rotation speed synchronize (current limiting operation) becomes longer, and protection operation of inverter overload may be activated.

■ Restart mode after momentary power failure (Continuous running level) (H15) Continued operation at the momentary power failure (P, I) (H92, H93)

- Trip after momentary deceleration is stopped

When trip after deceleration stopped is selected (F14 = 2), at momentary power failure restart operation (Mode selection), momentary power failure occurs while operating the inverter, and deceleration stop control starts when DC link bus voltage of the inverter becomes at or drops below the continuous running level.

Adjust voltage level of DC link bus to start deceleration stop control by H15.

Under decelerate-to-stop control, the inverter decelerates its output frequency keeping the DC link bus voltage constant using a PI regulator.

P (proportional) and I (integral) components of the PI regulator are specified by H92 and H93, respectively.

For normal inverter operation, it is not necessary to modify data of H15, H92 or H93.

- Continue to run

When momentary power failure restart operation (Continue to run) is selected (F14 = 3) at momentary power failure restart (operation selection), momentary power failure occurs while operating the inverter and continue to run control starts when DC link bus voltage of the inverter becomes at or drops below the continue to run level.

Adjust continue to run level to start continue to run control by H15.

Under the continue to run control, the inverter continues to run keeping the DC link bus voltage constant using the PI regulator.

P (proportional) and I (integral) components of the PI regulator are specified by H92 and H93, respectively.

For normal inverter operation, it is not necessary to modify data of H15, H92 or H93.

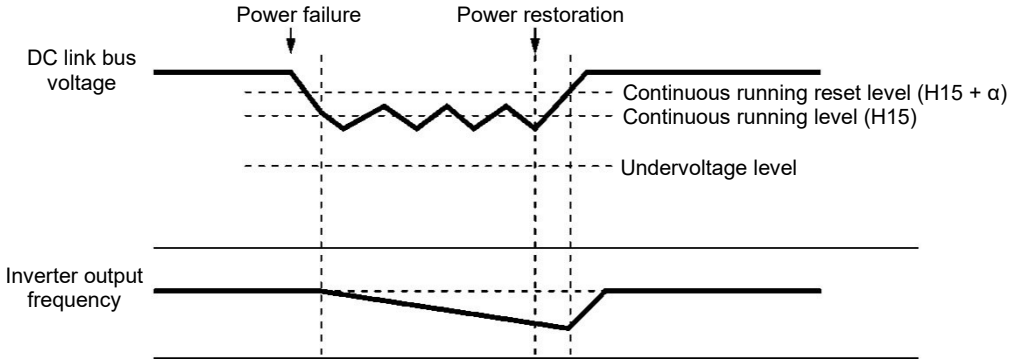

Power supply voltage	α	
	FRN0003 to 0115G2S-2G/ FRN0002 to 0060G2□-4G	FRN0146 to 0432G2S-2G/ FRN0085 to 1480G2□-4G
200 V (-2G)	5 V	10 V
400 V (-4G)	10 V	20 V

Note

Even if “Deceleration stop control” or “Continue to run”, is selected, the inverter may not be able to perform the function when the inertia of the load is small or the load is heavy, due to undervoltage caused by the control delay. In such a case, when “Deceleration stop control” is selected, the inverter allows the motor to coast to a stop; when “Continue to run” is selected, the inverter saves the output frequency being applied when the undervoltage alarm occurs and perform momentary power failure restart operation.

When the input power voltage for the inverter is high, setting the continue to run level high makes the control more stable even if the inertia of the load is relatively small. Raising the continuous running level too high, however, might cause the continue to run control activated even during normal operation.

When the input power voltage for the inverter is extremely low, continue to run control might be activated even during normal operation, at the beginning of acceleration or at an abrupt change in load. To avoid this, lower the continuous running level. Lowering it too low, however, might cause undervoltage that results from voltage drop due to the control delay.

Before you change the continuous running level, make sure that the continuous running control will be performed properly, by considering the fluctuations of the load and the input voltage.

F15, F16	Frequency limiter (Upper limit), Frequency limiter (Lower limit) Related function code: H63 Lower limit limiter (Mode selection)

■ **Frequency limiter (Upper limit) (Lower limit) (F15, F16)**

F15 and F16 specify the upper and lower limits of the output frequency or reference frequency, respectively.

Frequency limiter		Object to which the limit is applied
Frequency limiter (upper limit)	F15	Output frequency
Frequency limiter (lower limit)	F16	Reference frequency
Note	When the limit is applied to the reference frequency, delayed responses of control may cause an overshoot or undershoot, and the frequency may temporarily go beyond the limit level.	

- Data setting range: 0.0 to 599.0 (Hz)

■ **Low Limiter (Mode selection) (H63)**

H63 specifies the operation to be carried out when the reference frequency drops below the low level specified by F16, as follows:

H63 data	Enable
0	The output frequency will be held at the low level specified by F16.
1	Decelerate to stop

Refer to the figure below.

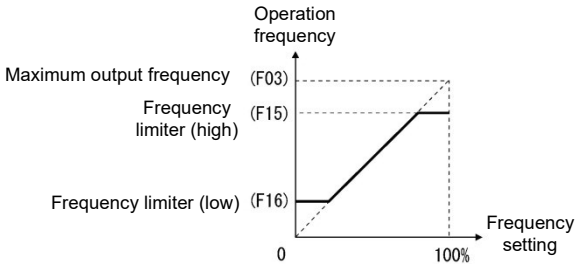

(For H63 = 0)

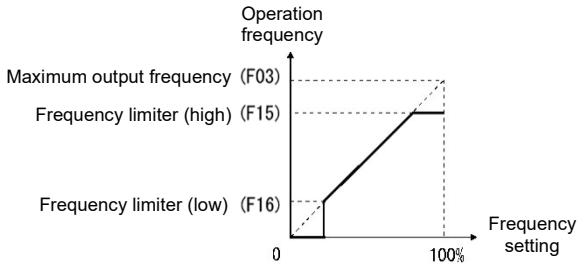

(For H63 = 1)

■ **Upper/lower limit limiter with analog input (E61 to E63, E66)**

By setting analog input terminal [12], [C1] (C1 function) (V3 function), or [V2] to “13: Frequency limiter (upper limit)” or “14: Frequency limiter (lower limit)”, the frequency obtained by multiplying the applicable analog input (0 to 100%) by the maximum output frequency in real time is used as the frequency limiter. The data range is limited to plus polarity, and the minus side is recognized as 0. The same operation is performed for both the F15 and F16 settings.

Note

- When changing the frequency limiter (Upper) (F15) in order to raise the operation frequency, be sure to change the maximum output frequency accordingly.
- Set each function code related to operation frequency so that the relationship among data becomes the following magnitude relationship.
  - F15>F16, F15>F23, F15>F25
  - F03>F16

  However, F23 is the starting frequency, and F25 is stop frequency

  If any wrong data is specified for these function codes, the inverter may not run the motor at the desired speed, or cannot start it normally.

FUNCTION
F Codes
E Codes
C Codes
P Codes
H Codes
A Codes
b Codes
r Codes
J Codes
d Codes
U Codes
y Codes
K Codes

F18	Bias (Frequency setting 1) (Refer to F01)

Refer to the description of function code F01 to find the details of bias (Frequency setting 1) setting.

F20 to F22 H95 H195	DC braking 1 (Starting frequency, Braking level, Braking time) DC braking (Braking response mode) DC braking (Braking timer at the startup)

These function codes specify the DC braking that prevents motor 1 from running by inertia during decelerate-to-stop operation.

If the motor enters a decelerate-to-stop operation by turning OFF the run command or by decreasing the reference frequency below the stop frequency, the DC braking starts when output frequency reached the DC braking starting frequency. Set braking starting frequency (F20), braking level (F21), and braking time (F22) to start DC braking when deceleration is stopped.

Setting the braking time to “0.00” (F22 = 0) disables the DC braking.

By H195, it is possible to perform DC braking when starting up inverter. By doing so, it is efficient for preventing from falling down when the brake is released, and prompt torque startup when starting up.

■ Braking starting frequency (F20)

F20 specifies the frequency at which the DC braking starts its operation during motor decelerate-to-stop state.

- Data setting range: 0.0 to 60.0 (Hz)

■ Braking level (F21)

F21 specifies the output current level to be applied when the DC braking is activated. The function code data should be set, assuming the rated output current of the inverter as 100 %, in increments of 1 %.

· Data setting range HHD: 0 to 100%, HND: 0 to 80%, HD *102 : 0 to 80%, ND *102 : 0 to 60%

*102 Supported with ROM0600 or later.

Note The inverter rated output current differs between the HHD/HND/HD/ND specification.

■ Braking time (F22)

F22 specifies the braking period that activates DC braking.

- Data setting range: 0.00 (Disable), 0.01 to 30.00 (s)

■ **Braking response mode (H95)**

H95 specifies the DC braking response mode.

H95 data	Characteristics	Note
0	Slow response. Slows the rising edge of the current, thereby preventing reverse rotation at the start of DC braking.	Insufficient braking torque may result at the start of DC braking.
1	Quick response. Quickens the rising edge of the current, thereby accelerating the build-up of the braking torque.	Reverse rotation may result depending on the moment of inertia of the mechanical load and the coupling mechanism.

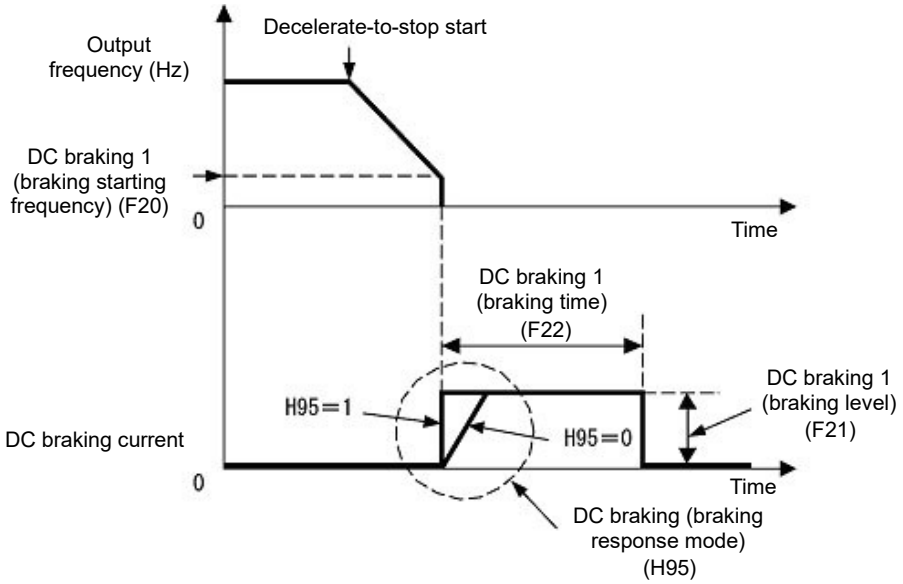

Tip

It is also possible to input DC braking command “DCBRK” by using an external digital input signal as the terminal command. As long as the DCBRK is ON, the inverter performs DC braking, regardless of the braking time specified by F22.
(📖 Refer to function code E01 to E09 (data =13) for details on “DCBRK”)

Turning the “DCBRK” ON even when the inverter is in a stopped state activates the DC braking. This feature allows the motor to be excited before starting, resulting in smoother acceleration (quicker build-up of acceleration torque) (under V/f control).

Note

In general, specify data of function code F20 at a value close to the rated slip frequency of motor. If an extremely high value is set, control may become unstable and an overvoltage alarm may result in some cases.

⚠CAUTION

The DC braking function of the inverter does not provide any holding mechanism.

Failure to observe this could result in injury.

FUNCTION
F Codes
E Codes
C Codes
P Codes
H Codes
A Codes
b Codes
r Codes
J Codes
d Codes
U Codes
y Codes
K Codes

■ **Braking timer at the startup (H195)**

When starting up inverter by run command, it is possible to start by operating DC braking.

This is particularly useful in applications such as hoists and elevators where the inverter runs at low speed braking mode after starting up, preventing loads from falling.

- Data setting range: 0.00: No DC braking at the start up 0.01 to 30.00 (s)

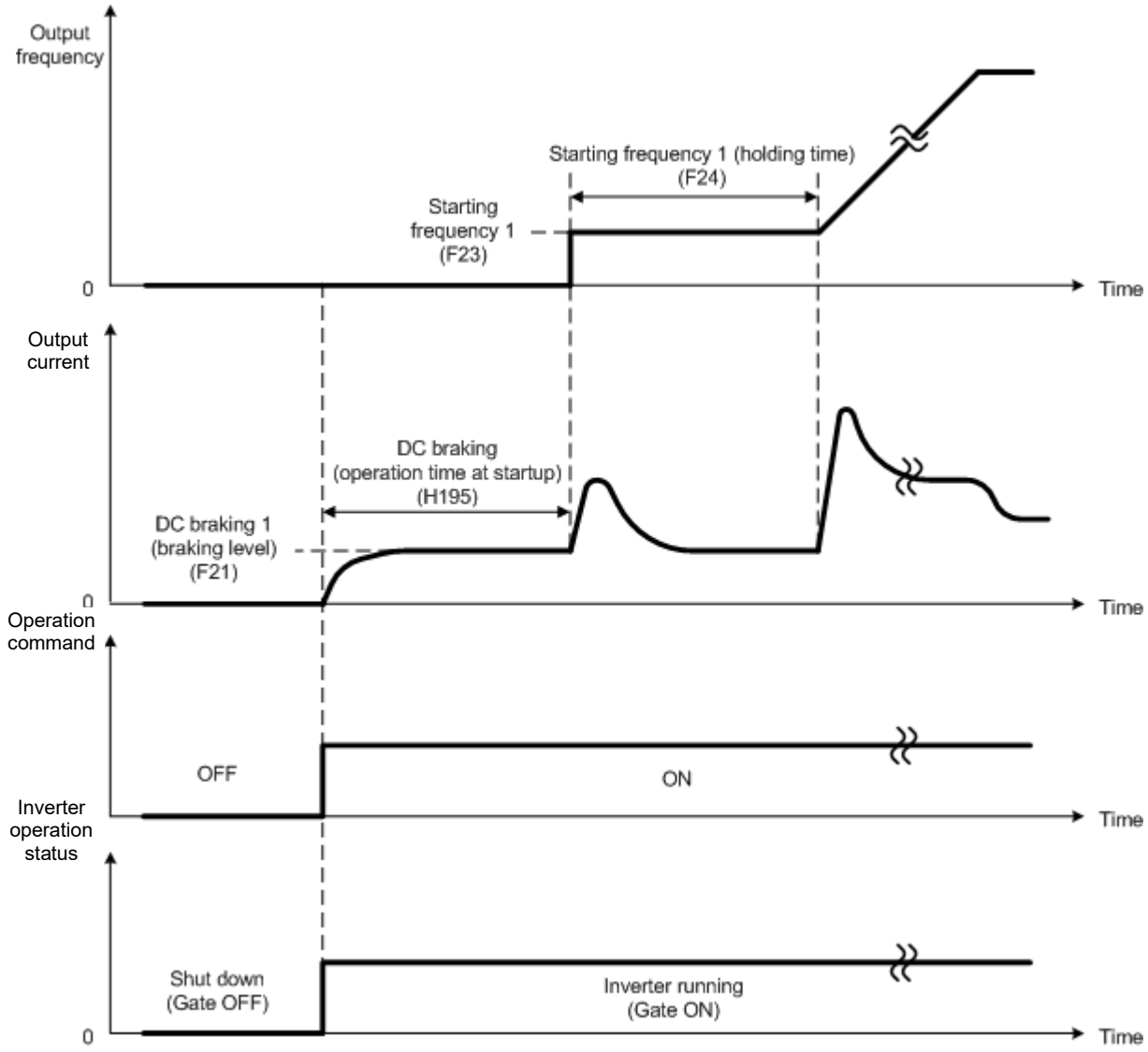

F23 to F25	Starting frequency 1, Starting frequency 1 (Holding time) and Stop frequency Related function codes: F38 and F39 (Stop frequency, Detection mode and Holding time) d24 (Zero speed control)

Under V/f control

At the startup of an inverter, the initial output frequency is equal to the starting frequency. The inverter stops its output when the output frequency reaches the stop frequency. Set the starting frequency to a level at which the motor can generate enough torque for startup. Generally speaking, set the rated slip frequency of the motor as the starting frequency.

Specifying the holding time for the starting frequency compensates for the delay time for the establishment of a magnetic flux in the motor; specifying that for the stop frequency stabilizes the motor speed at the stop of the inverter.

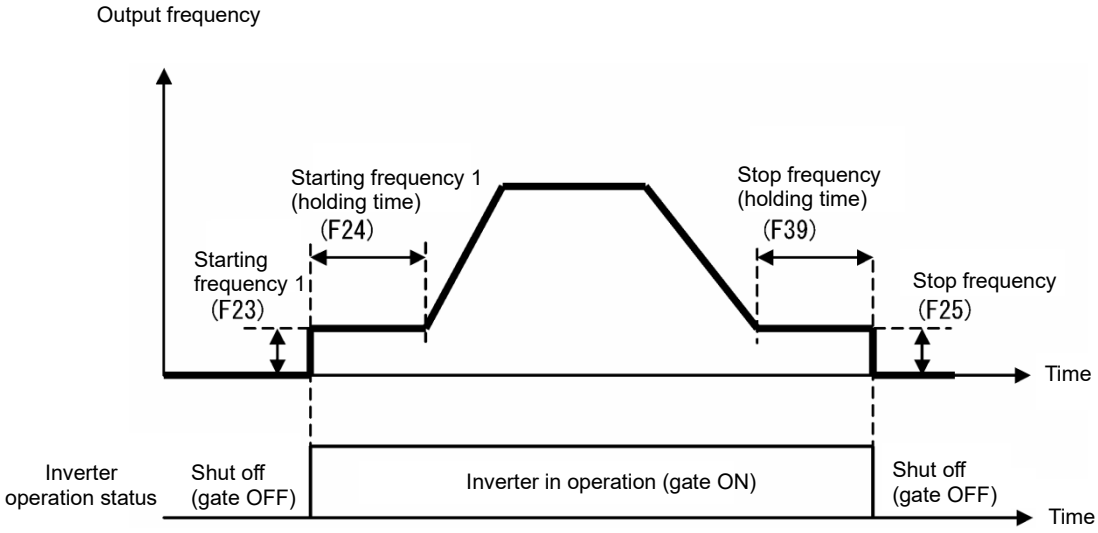

■ Starting frequency 1 (F23)

F23 specifies the starting frequency at the startup of an inverter.

- Data setting range: 0.0 to 60.0 (Hz)
  Under V/f control, even if the start frequency is set at 0.0 Hz, the inverter starts its output at 0.1 Hz.

■ Starting frequency 1 (Holding time) (F24)

F24 specifies the holding time for the starting frequency 1.

- Data setting range: 0.00 to 10.00 (s)

■ Stop frequency (F25)

F25 specifies the stop frequency at the stop of the inverter.

- Data setting range: 0.0 to 60.0 (Hz)
  Under V/f control, even if the stop frequency is set at 0.0 Hz, the inverter stops its output at 0.1 Hz.

■ Stop frequency (Holding time) (F39)

F39 specifies the holding time for the stop frequency.

- Data setting range: 0.00 to 10.00 (s)

Note: If the starting frequency is lower than the stop frequency, the inverter does not output any power as long as the reference frequency does not exceed the stop frequency.

Speed sensorless vector control/Vector control with speed sensor

At the startup, the inverter first starts at the “0” speed and accelerates to the starting frequency according to the specified acceleration time. After holding the starting frequency for the specified period, the inverter again accelerates to the reference speed according to the specified acceleration time. The inverter stops its output when the reference speed or actual speed (specified by F38 under vector control with speed sensor only) reaches the stop frequency specified by F25.

Specifying the holding time for the starting frequency compensates for the delay time for the establishment of a magnetic flux in the motor; specifying that for the stop frequency stabilizes the motor speed at the stop of the inverter.

If using a configuration for which it is necessary to pull in the magnetic pole position under vector control with speed sensor (permanent magnet synchronous motors), an operation different from this operation is performed. It is not possible to ensure sufficient torque when the motor starts at this time. Refer to the description for function code P30.

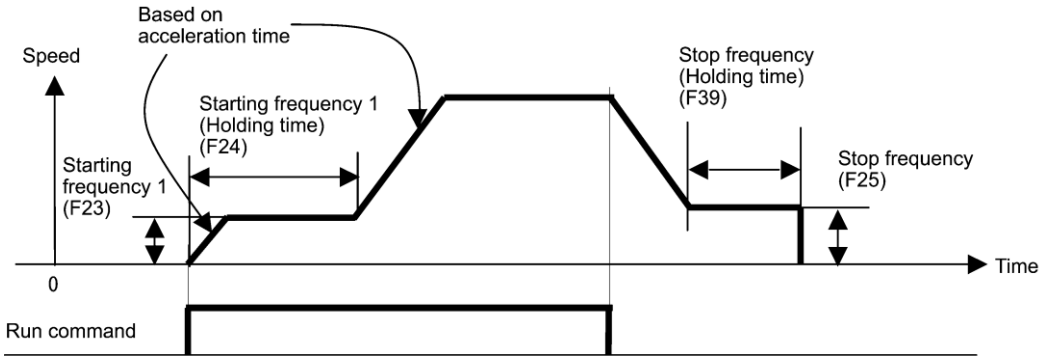

■ **Starting frequency 1 (F23)**

F23 specifies the starting frequency at the startup of an inverter.

- Data setting range: 0.0 to 60.0 (Hz)

■ **Starting frequency 1 (Holding time) (F24)**

F24 specifies the holding time for the starting frequency 1.

- Data setting range: 0.00 to 10.00 (s)

■ **Stop frequency (F25)**

F25 specifies the stop frequency at the stop of the inverter.

- Data setting range: 0.0 to 60.0 (Hz)

■ **Stop frequency (Holding time) (F39)**

F39 specifies the holding time for the stop frequency.

- Data setting range: 0.00 to 10.00 (s)

■ **Zero speed control (d24) (Under vector control with speed sensor and speed sensorless vector control (induction motors only))**

To perform zero speed control, it is necessary to set the speed command (frequency command) below the starting and stop frequencies. If the starting and stop frequencies are 0.0 Hz, however, zero speed control is enabled only when the speed command is 0.00 Hz. d24 specifies the operation for zero speed control when inverter starts and stops.

d24 data	Zero speed control at startup	Zero speed control when stopping	Description
0	Not possible	Allowed	When it is smaller than the stop frequency and start frequency the speed command, zero speed control does not work even ON the operation command. Zero speed control to work once you have started once it is set to higher than the starting frequency the speed command.
1	Allowed	Allowed	Setting the speed command at below the starting and stop frequencies and turning a run command ON enables zero speed control.
2	Not possible	Not possible	Zero speed control is not performed either when starting or stopping, regardless of the speed command.

The table below shows the conditions for enabling and disabling zero speed control when starting.

	Speed command	Run command	Enable		
			d24 = 0	d24 = 1	d24 = 2
When starting	Below the starting and stop frequencies	OFF	Stop (Gate OFF)		
		ON	Stop (Gate OFF)	Zero speed control	Stop (Gate OFF)
At stop	Below the stop frequency	ON	Zero speed control	Zero speed control	Stop (Gate OFF)
		OFF	Stop (Gate OFF)		

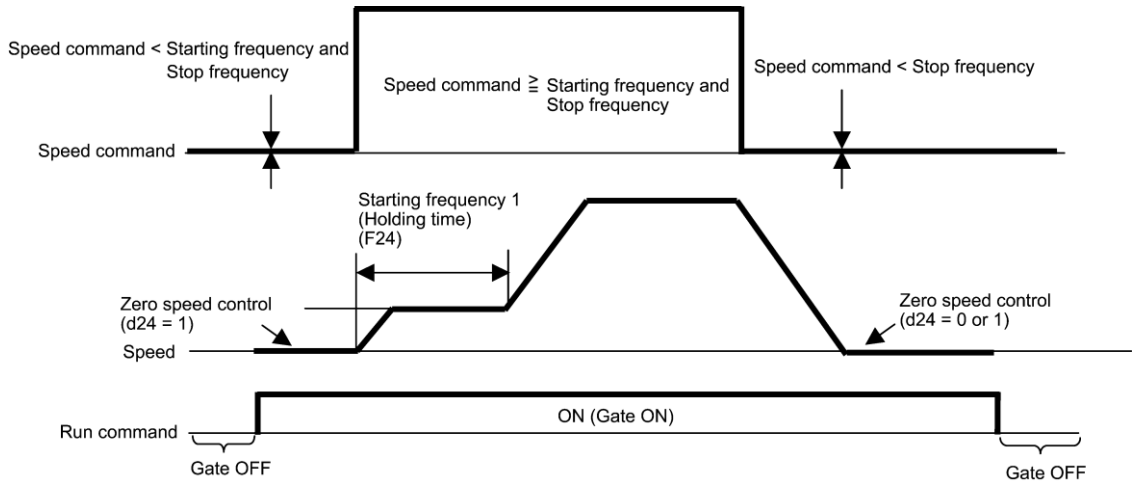

■ Stop Frequency (Detection mode) (F38) (Under vector control with speed sensor only)

F38 specifies whether to use the actual speed or reference one as a decision criterion to shut down the inverter output. Usually the inverter uses the detected speed. However, if the inverter undergoes a load exceeding its capability, e.g., an excessive load, it cannot stop because the motor cannot stop so that the detected speed may not reach the stop frequency level. If this happens, the inverter will be unable to stop. By specifying a setting that allows judgment to made based on the speed command value, the command value is reached even if the detection value is not, and therefore the inverter will come to a complete stop. If such a situation could arise, select the reference speed that can reach the stop frequency level even if the detected speed does not, in order to stop the inverter without fail achieving a fail-safe operation.

- Data setting range: 0 (Detected speed)
  1 (Reference speed)

F26, F27	Motor sound (Carrier frequency, Tone) Related function code: H98 Protection/Maintenance function (Mode selection)

■ **Motor Sound (Carrier frequency) (F26)**

Adjusts the carrier frequency. By changing carrier frequency, it is possible to reduce an audible noise generated by the motor or electromagnetic noise from the inverter itself, and to decrease a leakage current from the main output (secondary) wiring.

Setting frequency of carrier frequency differs depending on each model overload rating (HHD/HND/HD/ND).

Item	Characteristics
Carrier frequency	Low to High
Motor sound noise emission	High ↔ Low
Motor temperature (harmonics component)	High ↔ Low
Ripples in output current waveform	Large ↔ Small
Leakage current	Low ↔ High
Electromagnetic noise emission	Low ↔ High
Inverter loss	Low ↔ High

Setting range of carrier frequency is as follows.

F26: Setting range	HHD specification		HND specification	
	FRN****G2S-2G	FRN****G2□-4G	FRN****G2S-2G	FRN****G2□-4G
0.75 to 16kHz	0003 to 0288	0002 to 0179	0032 to 0085	0018 to 0045
0.75 to 10kHz	0346 to 0432	0217 to 1480	0115 to 0288	0060 to 0179
0.75 to 6kHz	—	—	0346 to 0432	0217 to 1480

F26: Setting range	HD specification *102		ND specification *102	
	FRN****G2S-2G	FRN****G2□-4G	FRN****G2S-2G	FRN****G2□-4G
0.75 to 10kHz	—	0085 to 0179	—	—
0.75 to 6kHz	—	0217 to 1480	—	0085 to 1480

*102 Supported with ROM0600 or later.

Note

Specifying a carrier frequency that is too low will cause the output current waveform to have a large amount of ripple. As a result, the motor loss increases, causing the motor temperature to rise. Furthermore, the large amount of ripple tends to cause a current limiting alarm. When the carrier frequency is set to 1 kHz or lower, therefore, reduce the load so that the inverter output current comes to be 80 % or less of the rated current.

When a high carrier frequency is specified, the temperature of the inverter may rise due to the ambient temperature rise or an increase of the load. If it happens, the inverter automatically decreases the carrier frequency to prevent the inverter overload (OLU). With consideration for motor noise, the automatic reduction of carrier frequency can be disabled. Refer to the description of H98.

It is recommended to set the carrier frequency at 5 kHz or above under vector control with speed sensor. DO NOT set it at 1 kHz or below.

Running a permanent magnet synchronous motor at low carrier frequency may overheat the permanent magnet due to the output current harmonics, resulting in demagnetization. When decreasing the carrier frequency setting, therefore, be sure to check the allowable carrier frequency of the motor.

When using a Fuji standard permanent magnet synchronous motor at rated load, set the carrier frequency to 2 kHz or higher.

FUNCTION
F Codes
E Codes
C Codes
P Codes
H Codes
A Codes
b Codes
r Codes
J Codes
d Codes
U Codes
y Codes
K Codes

■ Motor sound (tone) (F27)

F27 changes the motor running sound tone (only for motors under V/f control). This setting is effective when the carrier frequency specified by function code F26 is 7 kHz or lower. Changing the tone level may reduce the high and harsh running noise from the motor.

Note If the tone level is set too high, the output current may become unstable, or mechanical vibration and noise may increase. Also, this function code may not be very effective for certain types of motor.

F27 data	Function
0	Disable (Level 0)
1	Enable (Level 1)
2	Enable (Level 2)
3	Enable (Level 3)

F29 to F31, F58, F59 **F32, F60 to F63**	**Terminal [FM1]** **(Operation selection, Output gain, Function selection, Filter, Bias)** **Terminal [FM2]** **(Operation selection, Output gain, Function selection, Filter, Bias)**

These function codes allow outputting monitor data such as output frequency and output current to terminals [FM1] and [FM2] as analog DC voltage, current, and pulse. In addition, voltage and current output level on terminals [FM1] and [FM2] is adjustable.

Note When switching voltage, current, and pulse, it is necessary to switch both mode selection function code and switch on the PCB.

Terminal	Mode selection	Gain	Bias	Function	Filter	Switch
[FM1]	F29	F30	F59	F31	F58	SW4
[FM2]	F32	F60	F63	F61	F62	SW6

■ Operation selection (F29, F32)

Selects the output form for terminal [FM1] and [FM2]. Also change switches SW4 and SW6 on the PCB.

For details of the switches on the control PCB, refer to Chapter 2 “2.2.7 Switching switches”.

F29, F32 data	Terminal [FM1], [FM2] output form	Control PCB switch	
		[FM1]: SW4	[FM2]: SW6
0	Voltage output (0 to +10 VDC) (unipolar)	VO1	VO2
1	Current output (4 to 20 mA DC)	IO1	IO2
2	Current output (0 to 20mA DC)		
4	Voltage output (0 to ±10 VDC) (bipolar)	VO1	VO2

Note The output current has the same electrical potential as analog input, and is not an isolated power supply. Therefore, if an electrical potential relationship between the inverter and peripheral equipment has been established, e.g., by connecting an analog input, the cascade connection (series connection to multiple inverter current input) for current output cascade connections is not available.

Keep the optimum connection wire length.

■ **Gain (F30, F60)**

F30, and F60 allow you to adjust the output voltage and current within the range of 0 to 300%.

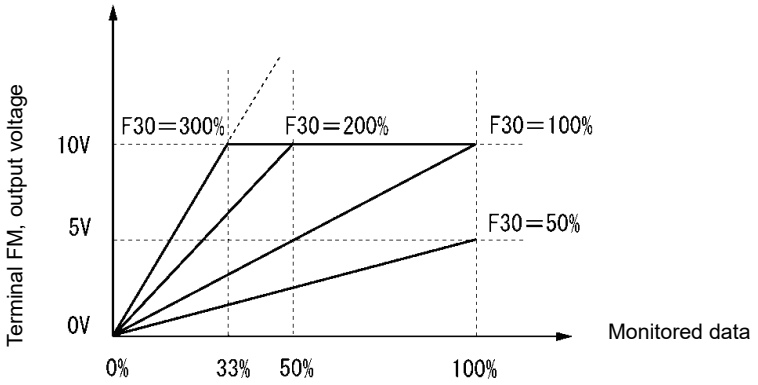

■ **Bias (F59, F63)**

F59 and F63 allow you to adjust the bias for the output voltage value and current value within the -100 to 0 to 100% range.
The bias is applied after multiplying the gain.

The figure below shows the effect of setting a gain of 200% and bias of -100% with bipolar voltage output of 0 to ±10 V from terminal [FM1].

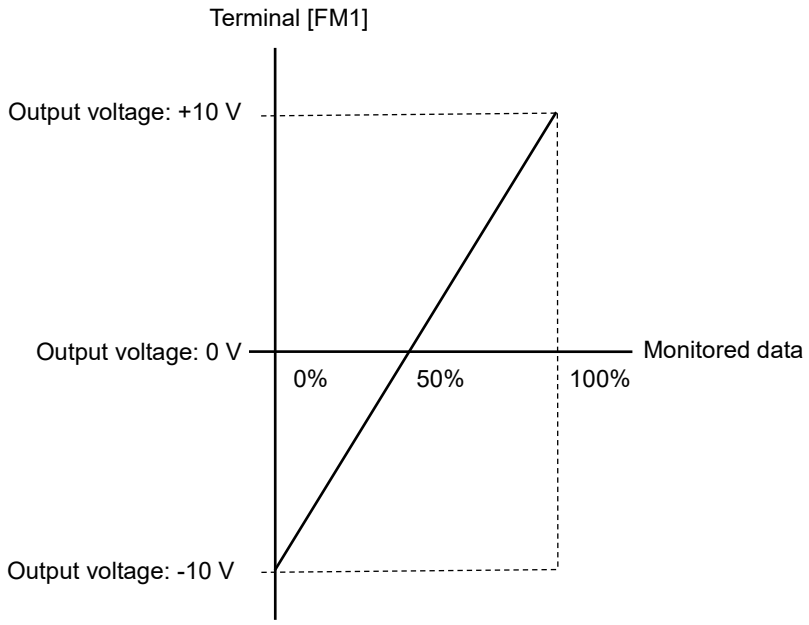

FUNCTION
F Codes
E Codes
C Codes
P Codes
H Codes
A Codes
b Codes
r Codes
J Codes
d Codes
U Codes
y Codes
K Codes

■ **Function selection (F31, F61)**

F31 and F61 specify which data is monitored at output terminals [FM1] and [FM2]. An absolute value is output when unipolar.

F31, F61 data	Subject of monitoring	Content	Definition of monitor amount 100 %
0	Output frequency 1 (before slip compensation)	Output frequency of the inverter (Equivalent to the motor synchronous speed)	Maximum output frequency Bipolar output possible at reverse side minus
1	Output frequency 2 (after slip compensation)	Output frequency of the inverter	Maximum output frequency Bipolar output possible at reverse side minus
2	Output current	Output current (RMS) of the inverter	Twice the inverter rated current (Depending on F80 setting value)
3	Output voltage	Output voltage (RMS) of the inverter	200V series: 250 V 400V series: 500 V
4	Output torque	Motor shaft torque	Twice the rated motor load Bipolar output possible
5	Load factor	Motor load factor	Twice the rated motor load
6	Power consumption	Input power of the inverter	Twice the rated output power (Inverter rated output power depending on F80)
7	PID feedback value (PV)	Feedback value under PID control	100% of the feedback amount
8	PG feedback value (speed)	Speed detected with the PG interface, or estimated speed (under speed sensorless vector control)	Maximum speed as 100% Bipolar output possible at reverse side minus
9	DC link bus voltage	DC link bus voltage of the inverter	200V series: 500 V 400V series: 1000 V
10	Universal AO	Command from communication (📖 See “RS-485 Communication User's Manual”)	±20,000 Bipolar output possible
11	Calibration (-)	For analog meter (bipolar) calibration Minus full scale output	Always full scale (-10 V) output
13	Motor output	Motor output (kW)	Twice the rated motor output (P02/A16 setting value)
14	Calibration (+)	For meter calibration Full scale output	Always full scale (equivalent to 100%) output
15	PID command (SV)	Command value under PID control	PID command 100 %
16	PID output (MV)	Output level of the PID processor under PID control (Frequency command)	Maximum output frequency Bipolar output possible
17	Master-follower angle deviation	Position deviation when performing master-follower operation	0% to 50% to 100%, representing a deviation of -180° to 0° to +180° respectively
18	Inverter heat sink temperature	Heat sink detection temperature of inverter	200 °C

F31, F61 data	Subject of monitoring	Content	Definition of monitor amount 100 %
21	PG feedback value	Actual speed (When PG interface option card is mounted, the speed is always calculated and output regardless of the control method.)	Maximum speed as 100 % Bipolar output possible at reverse side minus
22	Torque current command	Torque current command (bipolar) under vector control with speed sensor, speed sensorless vector control	Twice the motor rated torque current Bipolar output possible
23	PID deviation	PID command and PID feedback value deviation	PID command 100% Bipolar output possible
24	Reference line speed	Line speed setting	Maximum line speed 100% Bipolar output possible
25	Winding diameter ratio calculation value	Current winding diameter ratio corresponding to minimum winding diameter (d163)	d166: winding diameter calculation (FM output gain) sets how many times winding diameter ratio equals monitor amount of 100% (10 V/20 mA/255, etc.) (when d166 = 20, monitor amount of 100% is 20 times winding diameter ratio)
26	Setting frequency (before acceleration/decelerati on calculation)	Setting frequency immediately before acceleration/deceleration arithmetic unit	Maximum output frequency 100% Bipolar output possible
50 *101	PID control 1 feedback value (PV1)	PID control 1 feedback value 1	Feedback amount 100%
51 *101	PID control 1 command (SV1)	PID control command value 1	Feedback amount 100%
52 *101	PID control 1 deviation (ERR1)	PID control deviation 1 (SV1-PV1)	Feedback amount 100%
54 *101	PID control 2 feedback value (PV2)	PID control final deviation (ERR1, ERR2)	Feedback amount 100%
55 *101	PID control 2 command (SV2)	PID control feedback value 2	Feedback amount 100%
56 *101	PID control 2 deviation (ERR2)	PID control command value 2	Feedback amount 100%
60 *101	External PID control 1 feedback value (EPID1-PV)	External PID control 1 feedback value	Feedback amount 100%
61 *101	External PID control 1 command (EPID1-SV)	External PID control 1 command value	Feedback amount 100%
62 *101	External PID control 1 deviation (EPID1-ERR)	External PID control 1 deviation	Feedback amount 100%
63 *101	External PID control 1 final deviation (EPID-ERR)	External PID control 1 final deviation	Feedback amount 100%
65 *101	External PID control 1 final output (EPID1-OUT)	External PID control 1 final output	Feedback amount 100%
70 *101	External PID control 2 feedback value (EPID2-PV)	External PID control 2 feedback value	Feedback amount 100%

FUNCTION
F Codes
E Codes
C Codes
P Codes
H Codes
A Codes
b Codes
r Codes
J Codes
d Codes
U Codes
y Codes
K Codes

F31, F61 data	Subject of monitoring	Content	Definition of monitor amount 100 %
71 *101	External PID control 2 command (EPID2-SV)	External PID control 2 command value	Feedback amount 100%
72 *101	External PID control 2 deviation (EPID2-ERR)	External PID control 2 deviation	Feedback amount 100%
75 *101	External PID control 2 final output (EPID2-OUT)	External PID control 2 final output	Feedback amount 100%
80 *101	External PID control 3 feedback value (EPID3-PV)	External PID control 3 feedback value	Feedback amount 100%
81 *101	External PID control 3 command (EPID3-SV)	External PID control 3 command value	Feedback amount 100%
82 *101	External PID control 3 deviation (EPID3-ERR)	External PID control 3 deviation	Feedback amount 100%
85 *101	External PID control 3 final output (EPID3-OUT)	External PID control 3 final output	Feedback amount 100%
111 to 124	Customizable logic output signal 1 to 14	Enable only at analog output	±100% Bipolar output possible

*101 Support is possible for data 50 to 85 with ROM0500 or later.

Note If F31 and F61 = 16 (PID output), J01 = 3 (Dancer control), and J62 = 2 or 3 (Ratio compensation enabled), the PID output is equivalent to the ratio against the primary reference frequency and may vary within 300 % of the frequency. To indicate the value up to the full-scale of 300 %, set F30 and F60 data to “33” (%).

■ Filter (F58, F62)

F58 and F62 set filter time constants for the analog DC voltage and current. The larger the time constant, the slower the response. Specify the proper filter time constant taking into account the response speed of the receiving side. If fluctuation occurs due to noise, increase the time constant.

• Data setting range: 0.00 to 5.00 (s)

F33 to F35, F64	Terminal [FMP] (Pulse rate, Output gain, Function selection, Filter)

Monitor data such as output frequency and output current can be output to terminal [FMP] with a pulse signal. Furthermore, the analog meter can also be driven with the pulse signal average voltage as the average voltage output.

Output pulse specifications can be set for each item.

If using the pulse signal average voltage as the pulse output, set function code F33, and set F34 to 0.

If using as the average voltage output, set F34 to between 1 and 300%. By doing so, the F33 setting is ignored.

Output type	F33 data	F34 data	Pulse duty	Pulse count
Pulse output	25 to 6000 p/s	0	Approx. 50% (fixed)	Variable (monitor)
Average voltage output	-	1 to 300%	Variable (monitor)	2000 p/s (fixed)

■ Pulse rate (F33)

F33 specifies the pulse rate at which the output of the monitored item selected reaches 100 %, in accordance with the modes of the pulse counter to be connected.

- Data setting range: 25 to 6000 (pulse/s)

■ Output gain (F34)

F34 allows you to adjust the monitor output voltage value (average voltage value) in the 0 to 300% range.

Refer to the explanation of [FMP] in Chapter 2 “2.2.6 Control circuit terminals (common to all models)” for details on the output signal electrical specifications for SW8.

■ Function selection (F35)

F35 specifies what data is monitored at output terminal [FMP]. The subject of monitoring is the same as that for function code F31. See F31.

■ Filter (F64)

Sets the filter time constant when using terminal [FMP] with average voltage output. The larger the time constant, the slower the response. Specify the proper filter time constant taking into account the response speed of the receiving side. If fluctuation occurs due to noise, increase the time constant.

- Data setting range: 0.00 to 5.00 (s)

FUNCTION
F Codes
E Codes
C Codes
P Codes
H Codes
A Codes
b Codes
r Codes
J Codes
d Codes
U Codes
y Codes
K Codes

F37	Load Selection/Auto Torque Boost/Auto Energy Saving Operation 1 Related function codes: F09 Torque boost 1 H67 Auto energy saving operation (mode selection)

F37 specifies V/f pattern, torque boost type, and auto energy saving operation in accordance with the characteristics of the load.

F37 data	V/f characteristics	Torque boost	Auto energy-saving operation	Applicable load
0	Quadratic-torque characteristics	By F09 torque boost	Disable	Quadratic-torque load (generally the fan and pump load)
1	Linear V/f pattern			Constant torque load
2		Auto torque boost		Constant torque load (to be selected if a motor may be over-excited at no load)
3	Quadratic-torque characteristics	By F09 torque boost	Enable	Quadratic-torque load (generally the fan and pump load)
4	Linear V/f pattern			Constant torque load
5		Auto torque boost		Constant torque load (to be selected if a motor may be over-excited at no load)

Note If a required “load torque + acceleration torque” is 50% or more of the rated torque, it is recommended to select the linear V/f pattern. Factory defaults are set to linear V/f pattern.

Tip
- When under vector control with speed sensor, function code F37 is used with the auto energy saving operation enable/disable selection (V/f characteristics and torque boost will be disabled.)

F37 data	Enable
0 to 2	Auto energy saving operation OFF
3 to 5	Auto energy saving operation ON

- Under speed sensorless vector control, both function code F37 and F09 are disabled. Auto energy saving operation is also impossible.

■ **V/f characteristics**

Fuji inverters offer a variety of V/f patterns and torque boosts, which include V/f patterns suitable for variable torque load such as general fans and pumps and for constant torque load (including special pumps requiring high starting torque). Two types of torque boosts are available: manual and automatic.

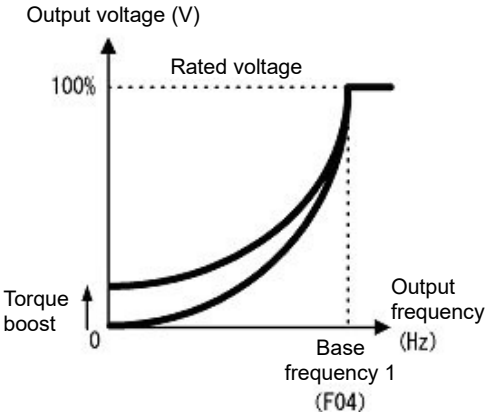

Quadratic-torque characteristics (F37 = 0)

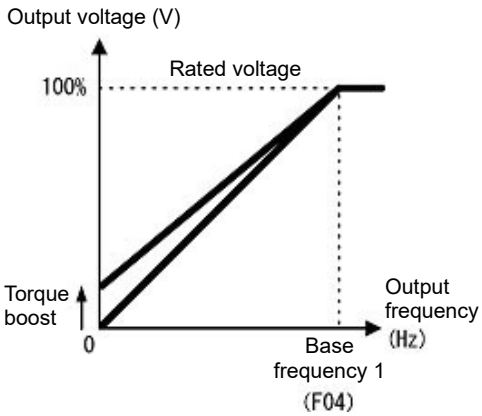

Linear V/f pattern (F37 = 1)

Tip If quadratic-torque characteristics are selected with function code F37, non-linear V/f H50, H51 is automatically set for FRN0146 to 04312G2S-2G / FRN0085 to 1480G2□-4G. Adjustment may be necessary depending on the motor and load characteristics. On the other hand, in the event that other

than quadratic-torque characteristics are selected with function code F37, non-linear V/f is automatically disabled.

Recommended value: H50 = 1/10 of the base frequency
H51 = 1/10 of the voltage at base frequency

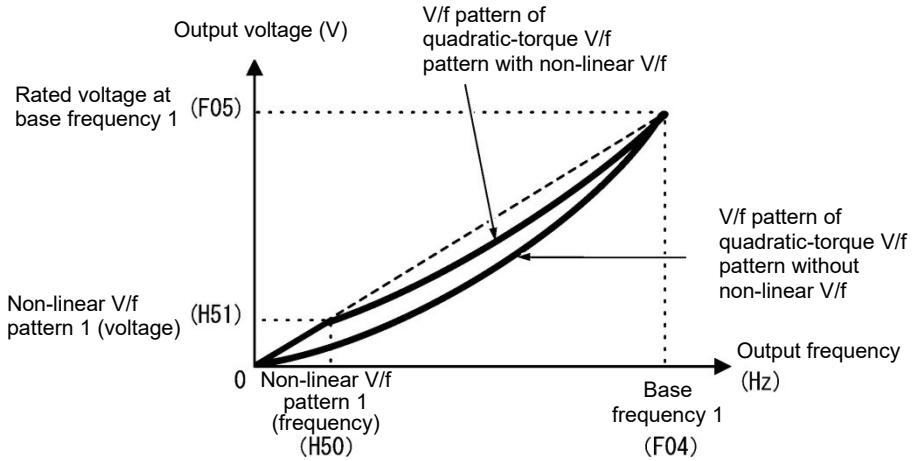

■ **Torque boost**

- **Manual torque boost by F09 (Manual adjustment)**
- Data setting range: 0.0 to 20.0 (%), (100%/base frequency voltage)

In torque boost using F09, constant voltage is added to the basic V/f pattern, regardless of the load. To secure a sufficient starting torque, manually adjust the output voltage to optimally match the motor and its load by using F09. Specify an appropriate level that guarantees smooth Startup and yet does not cause over-excitation at no or light load. Generally speaking, torque boost is unnecessary (0.0%) with motors of 30kW or higher.

Torque boost using F09 ensures high driving stability since the output voltage remains constant regardless of the load fluctuation.

Specify the function code F09 data in percentage to the base frequency voltage.

Note

- Precautions when driving an old model IE1 motor
  With the 0.75 kW to 22 kW factory default value, a boost amount that ensures a starting torque of approximately 100% is set for high-efficiency premium motors (IE3), but with the IE1 motor, starting torque may be insufficient because the boost amount is low. If starting torque is insufficient during the test run, either adjust the torque manually, or check the appropriate torque boost value with the motor manufacturer, and set that value. If using a Fuji Electric motor (IE1), by selecting Fuji Electric motor 8-series by setting P99 to 0, and initializing the motor constants with H03, the torque boost is reset to an appropriate value.
- Specifying a high torque boost level will generate a high torque, but may cause overcurrent due to over-excitation at no load. If you continue to drive the motor, it may overheat. To avoid such a situation, adjust torque boost to an appropriate level.
- When the non-linear V/f pattern and the torque boost are used together, the torque boost takes effect below the frequency on the non-linear V/f pattern's point.

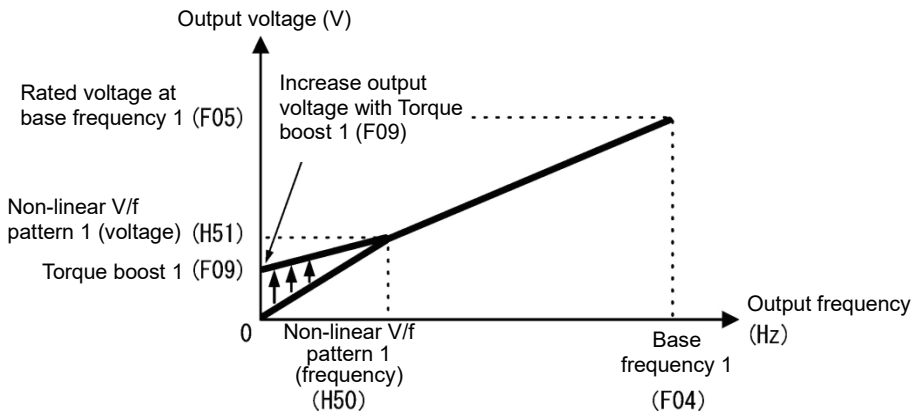

- **Auto torque boost**

This function automatically optimizes the output voltage to fit the motor with its load. Under light load, auto torque boost decreases the output voltage to prevent the motor from over-excitation. Under heavy load, it increases the output voltage to increase the output torque of the motor.

Note

- This function controls in accordance with motor characteristics. Therefore, set the base frequency 1 (F04), rated voltage at base frequency 1 (F05), and other pertinent motor parameters (P01 through P03 and P06 through P99) in line with the motor capacity and characteristics, or else perform auto-tuning (P04).
- When a special motor is driven or the load does not have sufficient rigidity, the maximum torque might decrease or the motor operation might become unstable. In such cases, do not use auto torque boost but choose manual torque boost using F09 (F37 = 0 or 1).

・ Auto energy saving operation (mode selection) (H67)

Automatically controls the output voltage to the motor in order to minimize the total motor and inverter loss. (Depending on the motor and load characteristics, this may not be effective. Verify the benefits of using auto energy saving operation for the actual application.)

Auto energy saving control can be selected from that applied when performing constant speed operation only, and when performing constant speed operation and acceleration/deceleration.

H67 data	Auto energy saving operation
0	When performing constant speed operation only (when accelerating and decelerating, torque boost or auto torque boost is applied with F09 based on the F37 setting)
1	When performing constant speed operation and acceleration/deceleration (Note: This should be restricted to acceleration/deceleration operation with a light load.)

If using auto energy saving operation, the response when changing the speed from constant speed operation will be slow. If sudden acceleration/deceleration is necessary, use after canceling auto energy saving operation beforehand.

Note

- Use auto energy saving operation at base frequency of 60 Hz or lower. By setting the base frequency to 60 Hz or higher, energy saving operation may be less effective, or offer no benefit. Auto energy saving operation operates at a frequency less than the base frequency. Auto energy saving operation will be disabled if the frequency is equal to or higher than the base frequency.
- This function controls in accordance with motor characteristics. Therefore, set the base frequency 1 (F04), rated voltage at base frequency 1 (F05), and other pertinent motor parameters (P01 through P03 and P06 through P99) in line with the motor capacity and characteristics, or else perform auto-tuning (P04).
- Under speed sensorless vector control, auto energy saving operation is disabled.

F38, F39	Stop frequency (Detection mode and holding time)	Refer to F23.

For details about the setting of the stop frequency (detection mode and holding time), refer to the description in the function code F23 section.

F40, F41	**Torque limiter 1-1/Torque limiter 1-2** **Related function codes: E16, E17 Torque limiter 2-1, 2-2** **H73 Torque limiter (Operating conditions selection)** **H74 Torque limiter (Control target)** **H75 Torque limiter (Applicable quadrant)** **H76 Torque limiter (Braking) (Frequency rising limit for braking)**

Under V/f control (F42 = 0, 1, 2, 3, 4)

If the inverter output torque exceeds the specified levels of the torque limiters, the inverter controls the output frequency and limits the output torque for preventing a stall.

Note In braking, the inverter increases the output frequency to limit the output torque. Depending on the conditions during operation, the output frequency could dangerously increase. H76 (Frequency rising limit for braking) is provided to limit the increasing frequency component.

Related function codes

Function code	Name	V/f control	Remarks
F40	Torque limiter 1-1	Y	
F41	Torque limiter 1-2	Y	
E16	Torque limiter 2-1	Y	
E17	Torque limiter 2-2	Y	
H73	Torque limiter (0perating conditions selection)	Y	
H74	Torque limiter (Control target)	N	
H75	Torque limit (Applicable quadrant)	N	
H76	Torque limiter (frequency rising limit for braking)	Y	
E61 to E63, E66	Terminal [12], [V2], [C1] (C1 function) (V3 function) Extension function selection	Y	7: Analog torque limiter A 8: Analog torque limiter B

■ **Torque limit control mode**

Under V/f control, torque limiting is performed by limiting torque current flowing across the motor.

The graph below shows the relationship between the torque and the output frequency at the constant torque current limit.

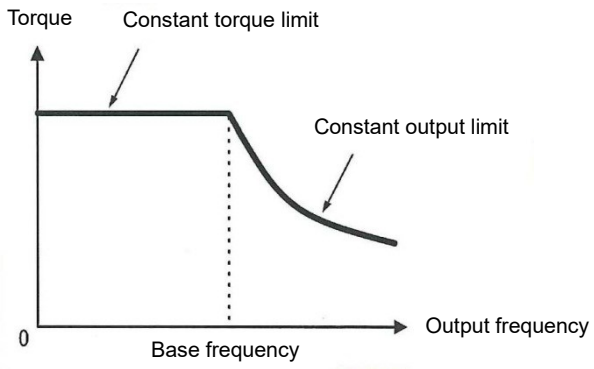

■ Torque limiter (F40, F41, E16, E17) Data setting range: -300 to 300(%). 999 (Disable)

These function codes specify the operation level at which the torque limiters become activated, as the percentage of the motor rated torque. Switching between motor 1 and 2 is possible using the control terminals (described later).

Function code	Name	Torque limit feature
F40	Torque limiter 1-1	Driving torque current limiter 1
F41	Torque limiter 1-2	Braking torque current limiter 1
E16	Torque limiter 2-1	Driving torque current limiter 2
E17	Torque limiter 2-2	Braking torque current limiter 2

Note The setting range is the plus/minus range, but a plus value should be set. Operation will be performed with an absolute value if a minus value is set.

Although the setting range of the torque is 300%, the torque limiter determined by the overload current of the unit internally limits the torque current output. Therefore, the torque current output is automatically limited at a value lower than 300 %, the maximum setting value.

■ Analog torque limiter (E61 to E63, E66)

The torque limit value can be specified by analog inputs (voltage or current) through terminals [12], [V2], [C1] (C1 function), and [C1] (V3 function). Assign as follows with function codes E61, E62, E63, and E66.

E61, E62, E63, E66 data	Name	Function	Description
7	Analog torque limit value A	Driving torque current limiter	Input modes: 100% / 10 V or 20 mA
8	Analog torque limit value B	Braking torque current limiter	

If these terminals have been set up to have the same data, the operation priority is given in the following order: E61 > E62 > E63 > E66

■ Torque limiter levels specified via communications link (S10, S11)

The torque limiter levels can be changed via the communications link. Communication dedicated codes S10, S11 interlock with the function codes F40, F41.

■ Switching torque limiters

The torque limiters can be switched by the function code setting and the terminal command “TL2/TL1” (Select torque limiter level 2/1) assigned to any of the digital input terminals. To assign the Torque limiter 2/Torque limiter 1, “TL2/TL1” set Data = 14 in function codes from E01 to E09. If no “TL2/TL1” is assigned, torque limiter levels 1-1 and 1-2 (F40 and F41) take effect by default.

■ **Torque limiter (Braking) (Frequency rising limit for braking) (H76) Data setting range: 0.0 to 599.0 (Hz)**

H76 specifies the rising limit of the frequency in limiting torque for braking. The factory default is 5.0 Hz. If the increasing frequency during braking reaches the limit value, the torque limiters no longer function, resulting in an overvoltage trip. Such a problem may be avoided by increasing the setting value of H76.

Note The torque limiter and current limiter are very similar in function. If both are activated concurrently, they may conflict with each other and cause hunting. Avoid concurrent activation of these limiters.

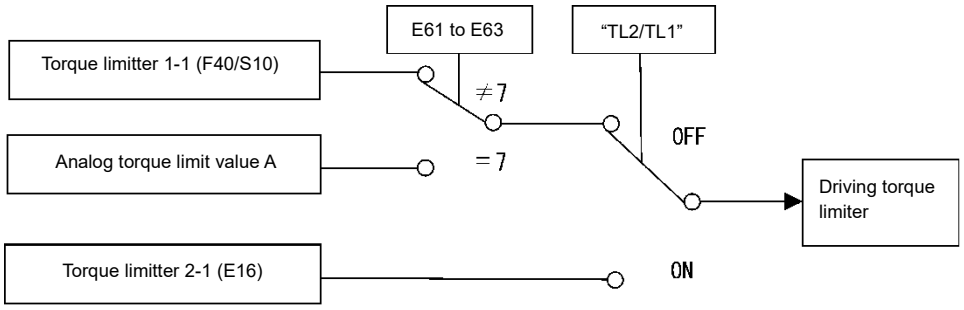

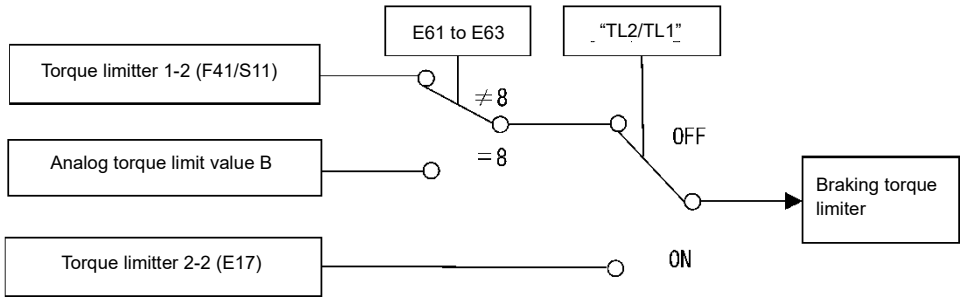

■ **Torque limiter (Operating conditions selection) (H73)**

■ **It is possible to set whether to enable or disable torque limiting while the motor is accelerating or decelerating, or while it is running at constant speed.**

H73 data	During acceleration/deceleration	During constant speed running
0	Enable	Enable
1	Disable	Enable
2	Enable	Disable

FUNCTION
F Codes
E Codes
C Codes
P Codes
H Codes
A Codes
b Codes
r Codes
J Codes
d Codes
U Codes
y Codes
K Codes

Under speed sensorless vector control/vector control with sensor (induction motors, permanent magnet synchronous motors) (F42 = 5, 6, 15, 16)

If the inverter's output torque exceeds the specified levels of the torque limiters, the inverter controls the speed regulator's output (torque command) in speed control or a torque command in torque control in order to limit the motor-generating torque.

Related function code

Function code	Name	Vector control	Remarks
F40	Torque limiter 1-1	Y	
F41	Torque limiter 1-2	Y	
E16	Torque limiter 2-1	Y	
E17	Torque limiter 2-2	Y	
H73	Torque limiter (0perating conditions selection)	Y	
H74	Torque limiter (Control target)	Y	
H75	Torque limit (Applicable quadrant)	Y	
H76	Torque limiter (Frequency rising limit for braking)	Y	
E61 to E63, E66	Terminal [12], [C1] (C1 function), [V2], [C1] (V3 function), extension function selection	Y	7: Analog torque limiter A 8: Analog torque limiter B

■ **Torque limiter (Control target) (H74)**

Under vector control, the inverter can limit motor-generating torque or output power, as well as a torque current (default).

H74 data	Control target
0	Keeps torque constant.
1	Keeps torque current constant.
2	Keeps power constant.

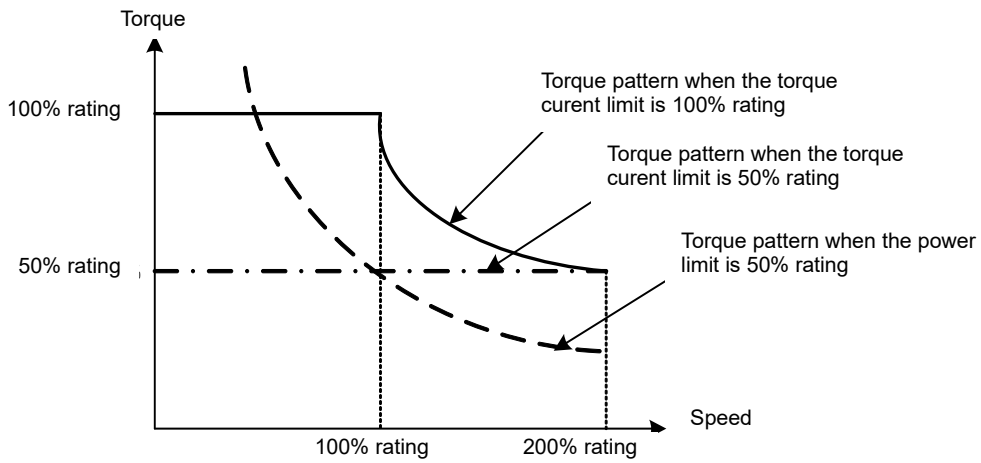

■ **Torque limiter (Applicable quadrant) (H75)**

The settings for each quadrant (forward rotation drive/braking, reverse rotation drive/braking) for which torque limiter A and B are enabled can be selected from “Drive/braking torque limiter”, “4 identical quadrants torque limiter”, and “Upper limit/lower limit torque limiter” shown below.

H75	Applicable quadrant
0: Drive/ braking	Limiting is applied by separating torque limiting when driving (torque limiter A) and torque limiting when braking (torque limiter B) for both forward rotation and reverse rotation. 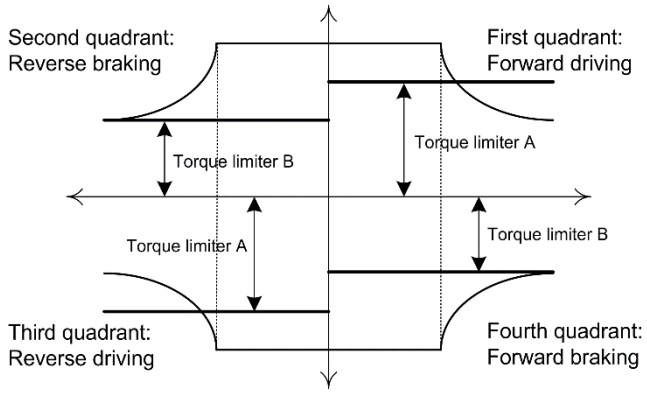
1: 4 identical quadrants	Limiting is applied with the same limiting value (torque limiter A) for both forward/reverse rotation and driving/braking. 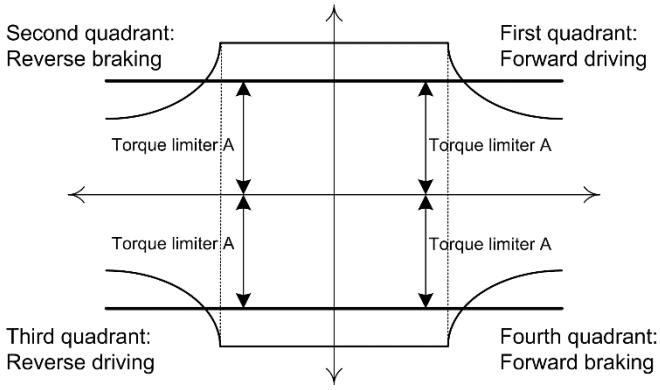

H75	Applicable quadrant
2: Upper limit/ lower limit	Limiting is applied by separating limit values into the upper limit value (torque limiter A) and the lower limit value (torque limiter B). Limiting is applied in the following patterns depending on the polarity of torque limiter A and torque limiter B

	Torque limit value A	Torque limit value B
Pattern 1	Plus	Plus
Pattern 2	Plus	Minus
Pattern 3	Minus	Minus

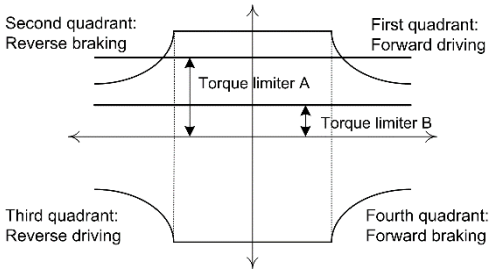

Pattern 1

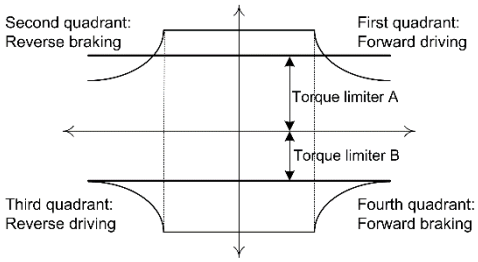

Pattern 2

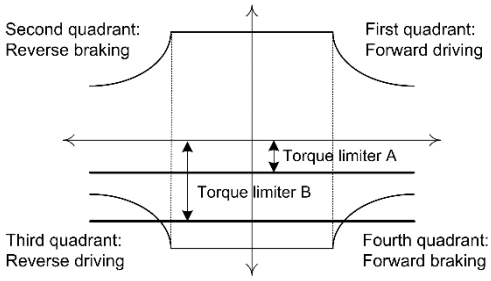

Pattern 3

Note

- If torque limiter A < torque limiter B, limiting is fixed with torque limiter A.
- By setting an upper limit/lower limit for torque limiting, reciprocating vibrations may occur between the upper limit value and lower limit value depending on conditions such as a narrowing in the width of the upper limit/lower limit setting value, or a delay in the speed control system response, and therefore caution is advised.

H75	Applicable quadrant
3: 4 independent quadrants	With the following assignments, limiting values are applied for the 4 quadrants independently.

	Name	Assignment
F40	Torque limiter 1-1	Quadrant I (forward rotation drive)
F41	Torque limiter 1-2	Quadrant IV (forward rotation braking)
E16	Torque limiter 2-1	Quadrant III (reverse rotation drive)
E17	Torque limiter 2-2	Quadrant II (reverse rotation braking)

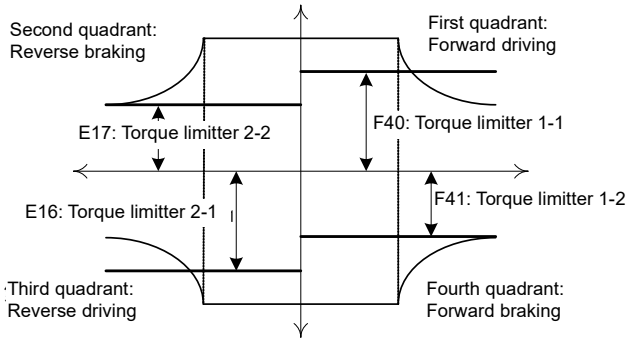

■ **Torque limiters (F40, F41, E16, E17) Data setting range: -300 to 300%; 999 (Disable)**

These function codes specify the operation level at which the torque limiters become activated, as the percentage of the motor rated torque.

Function code	Name	Function
F40	Torque limiter 1-1	Torque limit value A
F41	Torque limiter 1-2	Torque limit value B
E16	Torque limiter 2-1	Torque limit value A
E17	Torque limiter 2-2	Torque limit value B

Note Although the setting range of the torque is ±300 %, the torque limiter determined by the overload current of the unit internally limits the torque current output. Therefore, the torque current output is automatically limited at a value lower than 300%, the maximum setting value.
The setting range is the plus/minus range, but a plus value should be set for other than upper/lower limit torque limiting (H75 = 2). Operation will be performed with an absolute value if a minus value is set.

■ **Analog torque limiter (E61 to E63, E66)**

The torque limit value can be specified by analog inputs (voltage or current) through terminal [12], [C1] (C1 function), [C1] (V3 function), and terminal [V2] (V2 function). Assign with function codes E61, E62, and E63 (terminal [12], [C1] (C1 function), [C1] (V3 function) (extension function selection)) as follows.

E61, E62, E63, E66 data	Function	Description
7	Analog torque limit value A	Input modes: 200 % / 10 V or 20 mA
8	Analog torque limit value B	

If these terminals have been set up to have the same data, the operation priority is given in the following order: E61 > E62 > E63 > E66.

■ **Torque limiter levels specified via communications link (S10, S11)**

The torque limiter levels can be changed via the communications link. Communication dedicated codes S10, S11 interlock with the function codes F40, F41.

F42	**Drive control selection 1** **Related function code: H68 Slip compensation 1 (Operating conditions selection)**

F42 specifies the motor drive control. Refer to Chapter 4 “4.6 Selecting the Motor Control Method” to “4.8 Configuring Function Codes for Drive Controls” for details on control methods.

<table>
<tr><th>F42 data</th><th>Control method</th><th>Basic control</th><th>Speed feedback</th><th>Speed control</th></tr>
<tr><td>0</td><td>V/f control: without slip compensation</td><td rowspan="5">V/f control</td><td rowspan="3">No</td><td>Frequency control</td></tr>
<tr><td>1</td><td>Dynamic torque vector control (with slip compensation, auto torque boost)</td><td rowspan="2">Frequency control with slip compensation</td></tr>
<tr><td>2</td><td>V/f control with slip compensation</td></tr>
<tr><td>3</td><td>V/f control with speed sensor</td><td rowspan="2">Yes</td><td rowspan="2">Frequency control with automatic speed regulator (ASR)</td></tr>
<tr><td>4</td><td>Dynamic torque vector control with speed sensor</td></tr>
<tr><td>5</td><td>Speed sensorless vector control</td><td rowspan="4">Vector control</td><td>Speed estimation</td><td rowspan="4">Speed control with automatic speed regulator (ASR)</td></tr>
<tr><td>6</td><td>Vector control with speed sensor</td><td>Yes</td></tr>
<tr><td>15</td><td>Vector Control without speed sensor and magnetic pole position sensor</td><td>Speed estimation</td></tr>
<tr><td>16</td><td>Vector control with sensor (permanent magnet synchronous motors)</td><td>Yes</td></tr>
</table>

■ **<u>F42 = 0: V/f control without slip compensation</u>**

Under this control, the inverter controls a motor with the voltage and frequency according to the V/f pattern specified by function codes. This control disables all automatically controlled features such as the slip compensation, so no unpredictable output fluctuation occurs, enabling stable operation with constant output frequency.
If running multiple motors, select this control method.

■ **F42 = 2: V/f control with slip compensation**

Applying any load to an induction motor causes a rotational slip due to the motor characteristics, decreasing the motor rotation. The inverter's slip compensation function first presumes the slip value of the motor based on the motor torque generated and raises the output frequency to compensate for the decrease in motor rotation. This prevents the motor from decreasing the rotation due to the slip.

That is, this function is effective for improving the motor speed control accuracy.

Function code		Enable
P12	Rated slip	Specify the motor rated slip.
P09	Slip compensation gain (for drive)	Adjust the slip compensation for driving. Slip compensation amount when driving = Rated slip x Slip compensation gain (when driving)
P11	Slip compensation gain (braking)	Adjust the slip compensation amount when braking. Slip compensation amount when braking = Rated slip x Slip compensation gain (when braking)
P10	Slip compensation response time	Set the slip compensation response time. Basically, there is no need to modify the setting.

To improve the accuracy of slip compensation, perform auto-tuning.

H68 enables or disables the slip compensation function 1 according to the motor driving conditions.

H68 data	Motor driving condition		Motor driving frequency zone	
	Accel / decel	During constant speed	Base frequency or below	Above the base frequency
0	Enable	Enable	Enable	Enable
1	Disable	Enable	Enable	Enable
2	Enable	Enable	Enable	Disable
3	Disable	Enable	Enable	Disable

■ **F42 = 1: Dynamic torque vector control**

To get the maximal torque out of a motor, this control calculates the motor torque matched to the load applied and uses it to optimize the voltage and current vector output. Specify motor constants, or perform auto tuning.

When the vector control without speed sensor (dynamic torque vector) is selected, automatically auto torque boost and slip compensation become enabled. This control is effective for improving the system response to external disturbances such as load fluctuations, and the motor speed control accuracy.

Note that the inverter may not respond to a rapid load fluctuation.

■ **F42 = 3: V/f control with speed sensor**

Applying any load to an induction motor causes a rotational slip due to the motor characteristics, decreasing the motor rotation. Under V/f control with speed sensor, the inverter detects the motor rotation using the encoder mounted on the motor shaft and compensates for the decrease in slip frequency by the PI control to match the motor rotation with the reference speed. This improves the motor speed control accuracy.

Note Speed detection is performed, but the motor starts based on the H09: Auto search mode setting. The motor starts from the speed detection value only if auto search is enabled with function code H09 set to 1 or 2. If H09 = 0, the speed detection value is ignored, and the motor starts from the starting frequency.

■ F42 = 4: Dynamic torque vector control with speed sensor

The difference from “V/f control with speed sensor” stated above is to calculate the motor torque that matches to the load applied, and use it to optimize the voltage and current vector output for getting the maximal torque from the motor. This is effective for improving the system response to external disturbances such as load fluctuations, and the motor speed control accuracy.

Note Speed detection is performed, but the motor starts based on the H09: Auto search mode setting. The motor starts from the speed detection value only if auto search is enabled with function code H09 set to 1 or 2. If H09 = 0 (factory default), the speed detection value is ignored, and the motor starts from the starting frequency.

■ F42 = 5: Speed sensorless vector control

This control estimates the motor speed based on the inverter's output voltage and current, and uses the estimated speed for speed control. It also decomposes the motor drive current into the exciting and torque current components, and controls each of those components as vectors. No PG (pulse generator) interface card is required. It is possible to obtain the desired response by adjusting the control constants (PI constants) using the speed regulator (PI controller).

With vector control, a difference (voltage margin) is required between the voltage that the inverter is capable of outputting and the motor induced voltage to a certain extent in order to control the motor current. Generally speaking, general-purpose motors are designed for use with commercial power supplies, but due to the need for this voltage margin, it is necessary to control the current by suppressing the motor terminal voltage. By doing so, it is not possible to deliver rated torque even when the original motor rated current is flowing. To ensure that the rated torque is delivered, it is necessary to increase the rated current (the same applies with vector control with speed sensor).

■ F42 = 6: Vector control with speed sensor

This control requires an optional PG (pulse generator) and an optional PG interface card to be mounted on a motor shaft and an inverter, respectively. The inverter detects the motor’s rotational position and speed according to PG feedback signals and uses them for speed control. It also decomposes the motor drive current into the exciting and torque current components, and controls each of components as vectors.

It is possible to obtain the desired response by adjusting the control constants (PI constants) using the speed regulator (PI controller).

(Use of the inverter in combination with a dedicated Fuji motor for vector control (VG motor) is recommended.)

■ F42 = 15: Sensorless vector control (synchronous motors)

This control estimates the motor speed based on the inverter's output voltage and current, and uses the estimated speed for speed control. It also decomposes the motor drive current into the exciting and torque current components, and controls each of those components as vectors. No PG (pulse generator) interface card is required. It is possible to obtain the desired response by adjusting the control constants (PI constants) using the speed regulator (PI controller).

■ F42 = 16: Vector control with speed sensor (synchronous motors)

This control requires an optional PG (pulse generator) and an optional PG interface card to be mounted on a motor shaft and an inverter, respectively. The inverter detects the motor’s rotational position and speed according to PG feedback signals and uses them for speed control. It also decomposes the motor drive current into the exciting and torque current components, and controls each of components as vectors.

It is possible to obtain the desired response by adjusting the control constants (PI constants) using the speed regulator (PI controller).

(Use of the inverter in combination with a dedicated Fuji synchronous motor for vector control (GNF motor) is recommended.)

Note

Slip compensation, dynamic torque vector control, sensorless vector control, and vector control with speed sensor used motor constants. Consequently, the following conditions should be satisfied; otherwise, full control performance may not be obtained.

- A single motor should be controlled per inverter.
- Motor parameters P02, P03, P06 to P13 should be properly configured or auto-tuning should be performed.
- If the capacity of the motor being controlled is smaller than the inverter rated capacity, the current detection resolution will deteriorate, and control performance will drop. In such cases, a motor and inverter combination up to one rank lower is recommended.
- Set the wiring length between the inverter and motor to 50 m (164 ft) or less for the FRN0003 to 0018G2S-2G / FRN0002 to 0009G2□-4G, and to 100 m (328 ft) or less for the FRN0032 to 0432G2S-2G / FRN0018 to 1480G2□-4G. If it is longer, the inverter may not control the motor due to leakage current flowing through stray capacitance to the ground or between wires. In particular, small capacity inverters whose rated current is also small may be unable to control the motor even if the wiring is shorter than the lengths stated above. In that case, make the wiring length as short as possible or use a wire with small stray capacitance (e.g., loosely-bundled cable) to minimize the stray capacitance.

FUNCTION
F Codes
E Codes
C Codes
P Codes
H Codes
A Codes
b Codes
r Codes
J Codes
d Codes
U Codes
y Codes
K Codes

■ **Control parameters which are initialized when the control method F42 is changed**

If the control selection (F42) is changed from induction motor control (other than F42 = 15, 16) to permanent magnet synchronous motor control (F42 = 15, 16), the function code values in the following table are automatically changed to the initial values.

Function code	If changed by setting F42 to 15 or 16, or other than 15 or 16	If P02 changed	If motor constants are initialized by setting H03 to 2 with F42 = 0 to 6	If motor constants are initialized by setting H03 to 2 with F42 = 15 or 16
F03	Y	N	N	N
F04	Y	*1	*2	Y
F05	Y	*1	*2	Y
F06	Y	N	N	Y
F09	N	N	Y	Y
F10	N	N	N	Y
F11	Y	N	Y	Y
F12	Y	N	N	Y
F15	Y	N	N	N
F23	Y	N	N	N
F24	N	N	N	Y
F26	Y	N	N	N
F40 to F41	Y	N	N	N
E50	Y	N	N	N
P01	Y	N	Y	Y
P02	N	N	N	N
P03	Y	Y	Y	Y
P06 to P23	N	Y	Y	Y
P30	N	Y	Y	Y
P55 to P57	N	Y	Y	Y
P60 to P64	N	Y	Y	Y
P87	N	Y	Y	Y
P90	N	Y	Y	Y
P99	Y	N	N	N
H46	N	Y	Y	Y
d01 to d04, d06 and d67	Y	N	N	N
d90	N	N	Y	Y

Y: Change N: No change

*1 P99 = 1: Motor characteristics 1 (HP typical motor, typical model), P99 = 2: In the case of either motor characteristics 2 (dedicated Fuji motor for vector control) and synchronous motor control (F42 = 15, 16), Y applies (function code values are changed), and if neither is relevant, N applies (function code values are not changed).
*2 P99 = 1: Motor characteristics 1 (HP typical motor, typical model), P99 = 2: In the case of motor characteristics 2 (dedicated Fuji motor for vector control), Y applies (function code values are changed), and if not relevant, N applies (function code values are not changed).

Note If the control selection (F42) is set to induction motor speed sensorless vector control (F42 = 5), the function code d67 value is automatically changed.

F43, F44	Current limiter (Operation selection, Operation level) Related function code: H12 Instantaneous overcurrent limiting (Mode selection)

This is a dedicated V/f control function. It does not work under speed sensorless vector control or vector control with speed sensor.

When the output current of the inverter exceeds the level specified by the current limiter (F44), the inverter automatically manages its output frequency to prevent a stall and limits the output current. The value is set to 160% for the HHD specification, and 130% for the HND specification (initial values are written automatically when HHD or HND is selected with function code F80). If an overload current of 160% or higher, or 130% or higher flows momentarily, and the frequency drop resulting from current limiting becomes a problem, consider increasing the limiting level.

Operation at constant speed only (F43 = 1), and operation when acceleration and at constant speed (F43 = 2) can be set for the operation selection. Choose F43 = 1 if you need to run the inverter at full capability during acceleration and to limit the load (current) during constant speed operation.

■ Mode selection (F43)

F43 selects the motor running state in which the current limiter becomes active.

F43 data	Running states that enable the current limiter		
	During acceleration	During constant speed	During deceleration
0	Disable	Disable	Disable
1	Disable	Enable	Disable
2	Enable	Enable	Disable

■ Braking level (F44)

F44 specifies the operation level at which the output current limiter becomes activated, as a ratio of the inverter rating.

- Data setting range: 20 to 200 (%) of rated current of the inverter
  (Inverter's rated current changes according to the setting value of function code F80.)

■ Instantaneous overcurrent limiting (Mode selection) (H12)

H12 specifies whether the inverter invokes the current limit processing or enters the overcurrent trip when its output current exceeds the instantaneous overcurrent limiting level. Under the current limit processing, the inverter immediately turns OFF its output gate to suppress the further current increase and continues to control the output frequency.

H12 data	Function
0	Disable (An overcurrent trip occurs at the instantaneous overcurrent limiting level.)
1	Enable (An instantaneous overcurrent limiting operation is activated.)

If any problem could occur when the motor torque temporarily drops during current limiting processing, it is necessary to cause an overcurrent trip (H12 = 0) and actuate a mechanical brake at the same time.

Note

- Since the current limit operation with F43 and F44 is performed by software, it may cause a delay in control. If you need a quick response current limiting, also enable the instantaneous overcurrent limiting with H12.
- If an excessive load is applied when the current limiter operation level is set extremely low, the inverter will rapidly lower its output frequency. This may cause an overvoltage trip or dangerous turnover of the motor rotation due to undershooting. Depending on the load, extremely short acceleration time may activate the current limiting to suppress the increase of the inverter output frequency, causing hunting (undesirable oscillation of the system) or activating the inverter overvoltage trip. When specifying the acceleration time, therefore, you need to take into account machinery characteristics and moment of inertia of the load.

Note

- The torque limiter and current limiter are very similar in function. If both are activated concurrently, they may conflict with each other and cause hunting. Avoid concurrent activation of these limiters.
- Vector control with speed sensor itself contains the current control system, so it disables the current limiter specified by F43 and F44, as well as automatically disabling the instantaneous overcurrent limiting (specified by H12). Accordingly, the inverter causes an overcurrent trip when its output current exceeds the instantaneous overcurrent limiting level.

F50 to F52	Electronic thermal overload protection for braking resistor (Discharging capability, Allowable average loss and Braking resistance value)

These function codes specify the electronic thermal overload protection feature for the braking resistor.

Set the discharging capability, allowable average loss and resistance to F50, F51 and F52, respectively. These values are determined by the inverter and braking resistor models. For the discharging capability, allowable average loss and resistance, Refer to “11.6.3 Specification” in Chapter 11 “11.6 Braking Resistors (DB) and Braking Units”.

The values listed in the tables are for standard models and 10% ED models of the braking resistors which Fuji Electric provides. When using a braking resistor of any other manufacturer, confirm the corresponding values with the manufacturer and set the function codes accordingly.

Note
- Depending on the thermal characteristics of the braking resistor, the electronic thermal overload protection feature may act so that the inverter issues the overheat protection alarm dbH even if the actual temperature rise is not large enough. If this happens, review the relationship between the performance index of the braking resistor and settings of related function codes.

Tip
- Using the standard models of braking resistor or using the braking unit and braking resistor together can output temperature detection signal for overheat. Assign terminal command THR (“Enable external alarm trip”) to any of digital input terminals [X1] to [X9], [FWD] and [REV] and connect that terminal and its common terminal to braking resistor’s terminals [1] and [2]. Set OFF for function code F50.

Tip
- If the discharge withstand current rating and permissible average loss are unknown when using a non-Fuji inverter braking resistor, they can be obtained by calculating them from the applicable motor capacity, permissible duty cycle %ED, and maximum braking time braking resistor specifications.

$$\text{Discharge withstand current rating (kWs)} = \frac{\text{Max. braking time (s)} \times \text{motor capacity (kW)} \times \text{braking torque (\%)}/100}{2}$$

$$\text{Permissible average loss (kW)} = \frac{\text{Permissible duty cycle (\%ED)}/100 \times \text{motor capacity (kW)} \times \text{braking torque (\%)}/100}{2}$$

Example

Braking resistor specifications

Motor capacity	Braking torque (%)	Max. braking time (s)	Permissible duty cycle %ED
11kW	100%	5s	10%

Discharge withstand current rating (kWs) = 5 s x 11 kW x 1 (100%) ÷ 2 = 27.5 kWs

Permissible average loss (kW) = 0.1 (10%) x 11 kW x 1 (100%) ÷ 2 = 0.55 kW

※ The value for braking resistor braking time is estimated based on deceleration (see figure below).

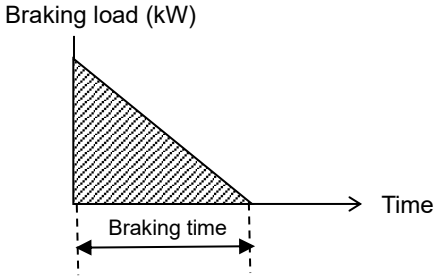

FUNCTION
F Codes
E Codes
C Codes
P Codes
H Codes
A Codes
b Codes
r Codes
J Codes
d Codes
U Codes
y Codes
K Codes

■ Discharging capability (F50)

The discharging capability refers to kWs allowance for a single braking cycle.

F50 data	Function
1 to 9000	1 to 9000 (kWs)
OFF	Disables the protective function with a braking resistor electronic thermal overload.

■ Allowable average loss (F51)

Allowance average loss is the resistor capacitor that enables continuous operation of motor.

F51 data	Function
0.001 to 99.99	0.001 to 99.99 (kW)

■ Braking resistance value (F52)

F52 specifies the resistance of the braking resistor.

F52 data	Function
0.01 to 999	0.01 to 999 (Ω)

F58, F59 F32, F60 to F63	**Terminal [FM1] (Filter, Bias) Terminal [FM2] (Operation selection, Output gain, Function selection, Filter, Bias)**

A detailed explanation can be found in the function code F29 section.

F64	**Terminal [FMP] (Filter)**

A detailed explanation can be found in the function code F33 section.

F80	Switching between HHD, HND, HD and ND specification

The HHD specification is standard by default, and therefore use is possible with motor standard rated current one to three ranks higher by switching to the HND, HD or LD specification. However, the overload capability will drop. The specification for motor 2 to 4 will also change.

The HD specification for Fuji's inverter FRENIC-MEGA (G1) series is equivalent to the HHD specification for this model, and the LD specification is equivalent to the HND specification.

Double key operation (STOP key + ▲/▼ keys) is required to change function code F80 data.

F80 data	Specification	Application	Rated current level	Ambient temperature	Overload capability	Maximum output frequency
0	HHD specification	Heavy load	Capable of driving a motor whose capacity is the same as the inverter capacity.	50 °C (122°F)	150% for 1 min 200% for 3.0 s	599 Hz
1	HND specification	Standard load	Capable of driving a motor whose capacity is one or two ranks higher than the inverter capacity.	50 °C (122°F)	120 % for 1 min	599 Hz
3	HD specification *102	Heavy load	Capable of driving a motor whose capacity is one rank higher than the inverter capacity.	40 °C (104°F)	150% for 1 min	599 Hz
4	ND specification *102	Standard load	Capable of driving a motor whose capacity is two or three ranks higher than the inverter capacity.	40 °C (104°F)	120% for 1 min	599 Hz

*102 Supported with ROM0600 or later.
Refer to Chapter 12 "SPECIFICATIONS" for details on specific rated current values.

Note

- F80 can not be set to "3 (HD specification)" or "4 (ND specification)" for the FRN****G2S-2G / FRN0002 to 0060G2□-4G.
- Even if F80 is set to "1 (HND specification)" for the FRN0003 to 0018G2S-2G / FRN0002 to 0009G2□-4G, the inverter operates internally as the HHD specification.
- When changing F80, rewrite torque boost 1 to 4 (F09, A05, b05, r05) to the HHD or HND setting values indicated in "Table 5.2 1 Factory default settings by inverter capacity" in Chapter 5 "5.2.2 Function code tables".Rewrite Current limiter (Operation level) F44 also.
- HND, HD and ND specification inverters are subject to restrictions on the function code data setting range and internal processing as listed below.
- With ROM0500 or later, some types have expanded rated current values and standard applicable motors for HND, HD and ND specifications. Depending on the initial value and setting value of F44, the setting value of F31, etc., the monitor amount full scale changes.

FUNCTION
F Codes
E Codes
C Codes
P Codes
H Codes
A Codes
b Codes
r Codes
J Codes
d Codes
U Codes
y Codes
K Codes

Function code	Name	Remarks
F21	DC braking 1 (Braking level)	Upper limit restriction
A10	DC braking 2 (Braking level)	
b10	DC braking 3 (Braking level)	
r10	DC braking 4 (Braking level)	
F26	Motor sound (Carrier frequency)	Upper limit restriction
F31, F35, F61, o90, o96	Terminal [FM1], [FM2], [FMP], [Ao], [CS] (Function selection)	Setting value = 2: Output current, = 6: Power consumption Monitor amount full scale changes
F44	Current limiter (Level)	Default setting, setting value
J68	Brake Signal Brake-release current	Upper limit restriction
d120	Brake signal brake-release current (REV)	

Refer to explanation of each function code and selection guidance in Chapter 10 “10.4.2 Guideline for selecting inverter drive mode and capacity.”

Note

- Due to the above restriction, if writing function codes continuously in ascending order by communication with RS-485, etc., be sure to write F80 first.
- Motor capacities 1 to 4 (P02, A16, b16, r16) do not automatically move one rank up (or down).

  Configure to match the applicable motor capacity as required.

  Furthermore, if initializing motor constants, set motor capacities 1 to 4 (P02, A16, b16, r16) first, set the motor type by selecting motor 1 to 4 (P99, A39, b39, r39), and then initialize the motor with H03.

5.3.2 E codes (Extension terminal functions)

E01 to E09	Terminal [X1] to [X9] (Function selection) Related function codes: E70 M/Shift key function E98 Terminal [FWD] function E99 Terminal [REV] function

E01 to E09, E98 and E99 assign commands to general-purpose, programmable, digital input terminals, [X1] to [X9], [FWD], and [REV].

These function codes can also switch the logic system between normal and negative to define how the inverter logic interprets the ON or OFF state of each terminal. The factory default setting is normal logic system “Active ON.” Functions assigned to digital input terminals [X1] to [X9], [FWD] and [REV] are as shown below. Descriptions that follow are given in normal logic system. Each signal has been described at data allocation order. However, the signal is related has been described together. Refer to the function codes in the “Related function codes” column, if any.

With terminal functions for which Y is indicated for E70 (keypad M/Shift key) in the “5.2-3 Control input terminal setting list table” under “[2] E codes” in “5.2.2 Function code tables”, by setting the same data as in E01 to E09 for function code E70, a function is assigned to the keypad M/Shift key that allows commands to be turned ON and OFF manually.
Refer to the explanation on function code E70 for details.

⚠CAUTION

- Run commands (e.g., Run forward “FWD”), stop commands (e.g., coast to stop “BX”), and frequency change commands can be assigned to digital input terminals. Depending on the digital input terminal status, operation may start suddenly, or the speed may change significantly simply by changing the function code settings. Make changes to function code settings after sufficiently ensuring safety.
- Functions for switching run or frequency command sources (such as “SS1, SS2, SS4, SS8”, “Hz2/Hz1”, “Hz/PID”, “IVS” and “LE”) can be assigned to the digital input terminals. Switching these signals may cause a sudden motor start or an abrupt change in speed depending on the condition. Depending on the conditions, changes to these signals may result in operation being started suddenly or the speed changing suddenly.

Failure to observe this could result in an accident or injury.

Assignment data		Defined function	Signal name	Related function code
Active				
ON	OFF			
0	1000	Select multistep frequency (1 to 15 steps)	“SS1”	C05 to C19
1	1001		“SS2”	
2	1002		“SS4”	
3	1003		“SS8”	
4	1004	Select ACC/DEC time (2 steps)	“RT1”	F07, F08 E10 to E15
5	1005	Select ACC/DEC time (4 steps)	“RT2”	
6	1006	Select self-hold	“HLD”	F02
7	1007	Coast to stop command	“BX”	-
8	1008	Alarm (error) reset	“RST”	-
1009	9	External alarm	"THR"	-
10	1010	Jogging operation	"JOG"	C20 H54, H55, d09 to d13
11	1011	Frequency setting 2/Frequency setting 1	“Hz2/Hz1”	F01, C30

Assignment data		Defined function	Signal name	Related function code
Active				
ON	OFF			
12	1012	Select motor 2	“M2”	A42
13	-	DC braking command	"DCBRK"	F20 to F22
14	1014	Select torque limit 2/Torque limit 1	“TL2/TL1”	F40, F41 E16, E17
15	-	Switch to commercial power (50 Hz)	“SW50”	-
16	-	Switch to commercial power (60 Hz)	“SW60”	-
17	1017	UP command	"UP"	Frequency setting: F01, C30 PID command: J02
18	1018	DOWN command	"DOWN"	
19	1019	Allow function code editing (Data change enabled)	“WE-KP”	F00
20	1020	Cancel PID control	“Hz/PID”	J01, J101, J201
21	1021	Switch normal/inverse operation	"IVS"	C53, C54, J01
22	1022	Interlock	"IL"	F14
23	1023	Cancel torque control	“Hz/TRQ”	H18
24	1024	Select link operation (RS-485, BUS option)	"LE"	H30, y98
25	1025	Universal DI	“U-DI”	-
26	1026	Select auto search for idling motor speed at starting	"STM"	H09, d67
1030	30	Force to stop	"STOP"	H56
32	1032	Pre-excitation	"EXITE"	H84, H85
33	1033	Reset PID integral and differential terms	“PID-RST”	J01, J101, J201
34	1034	Hold PID integral term	“PID-HLD”	
35	1035	Local (keypad) command selection	"LOC"	(See section 3.3.8)
36	1036	Select motor 3	“M3”	A42, b42
37	1037	Select motor 4	“M4”	A42, r42
38	1038	Run enable *100	“RE”	-
39	-	Condensation prevention	"DWP"	J21
40	-	Switch to commercial power built-in sequence (50 Hz)	“ISW50”	J22
41	-	Switch to commercial power built-in sequence (60 Hz)	“ISW60”	
42	1042	Home position limit switch	“LS”	J73 to J88
46	1046	Enable overload stop	"OLS"	J63 to J67 J90 to J92
47	1047	Servo lock	"LOCK"	J97 to J99
48	-	Pulse train input (valid only for terminal [X6], [X7])	"PIN"	F01, C30 d62, d63

Assignment data		Defined function	Signal name	Related function code
Active				
ON	OFF			
49	1049	Pulse train sign (valid for other than terminal [X6], [X7])	"SIGN"	
50	1050	Clear running motor regular switching time *101	“MCLR”	J436
58	1058	UP/DOWN frequency clear	"STZ"	F01, H61
59	1059	Battery operation	“BATRY”	-
60	1060	Select torque bias 1	“TB1”	H154 to H162
61	1061	Select torque bias 2	“TB2”	
62	1062	Hold torque bias	“H-TB”	
65	1065	Check brake	"BRKE"	J68 to J96,H180, d120 to d124
70	1070	Cancel line speed control	“Hz/LSC”	d41
71	1071	Hold line speed control frequency in the memory	“LSC-HLD”	
72	1072	Count the run time of commercial power-driven motor 1	“CRUN-M1”	-
73	1073	Count the run time of commercial power-driven motor 2	“CRUN-M2”	
74	1074	Count the run time of commercial power-driven motor 3	“CRUN-M3”	
75	1075	Count the run time of commercial power-driven motor 4	“CRUN-M4”	
76	1076	Select droop control	"DROOP"	H28
77	1077	PG alarm cancel	“PG-CCL”	-
78	1078	Select speed control parameter 1	“MPRM1”	d01 to d06
79	1079	Select speed control parameter 2	“MPRM2”	
80	1080	Cancel customizable logic	"CLC"	E01 to E09, U81 to U90
81	1081	Clear all customizable logic timers	"CLTC"	
82	1082	Cancel anti-regenerative control	“AR-CCL”	H69
83	1083	PG input switching	"PG-SEL"	d14 to d18
84	1084	Acceleration/deceleration cancel (bypass)	"BPS"	-
87	1087	Run command 2/1 *100	“FR2/FR1”	F02
88	—	Run forward / stop 2 *100	“FWD2”	
89	—	Run reverse / stop 2 *100	“REV2”	
94	-	Jogging forward rotation/stop command	“FJOG”	H31
95	-	Jogging reverse rotation/stop command	"RJOG"	
97	-	Forward rotation/reverse rotation selection	"DIR"	F02
98	-	Run forward (Exclusively assigned to [FWD] and [REV] terminals by E98 and E99)	"FWD"	F02
99	-	Run reverse (Exclusively assigned to [FWD] and [REV] terminals by E98 and E99)	"REV"	
100	-	No function assigned	"NONE"	U02, U03, etc.
105	1105	Light load automatic double speed judgment permission	"LAC-ENB"	d170 to d189
110	1110	Servo lock gain selection	"SLG2"	J97, d28
1111	111	Forced stop (terminal block only enabled)	"STOP-T"	H56
116	1116	AVR cancel	"AVR-CCL"	F05, H71

Assignment data		Defined function		Signal name	Related function code
Active					
ON	OFF				
119	1119	Speed regulator P selection		"P-SEL"	d201 to d299
121 to 129	1121 to 1129	Customizable logic input 1 to 9		"CLI1-9"	U01 to U70
130	1130	Boost command	*101	“BST”	J143 to J147
131	1131	Flowrate switch	*101	“FS”	J163 to J166
132	1132	Filter clogging reverse rotation comman	*101	“FRC”	J188 to J195
133	1133	Switch PID channel	*101	“PID2/1”	J101, J201
134	1134	Forced operation		"FMS"	H116 to H121
135	1135	Travel/position switching		“INC/ABS”	d201 to d299
136	1136	Orientation command		"ORT"	
137	1137	Position control/speed control switching		“POS/Hz”	
138	1138	Homing command		“ORG”	
139	1139	+direction overtravel		“+OT”	
140	1140	-direction overtravel		“-OT”	
141	1141	Position clear command		“P-CLR”	
142	1142	Position preset command		“P-PRESET”	
143	1143	Teaching signal		“TEACH”	
144	1144	Position change command		“POS-SET”	
145	1145	Positioning data selection 1		“POS-SEL1”	
146	1146	Positioning data selection 2		“POS-SEL2”	
147	1147	Positioning data selection 4		“POS-SEL4”	
149	1149	Switch pump control	*101	“PCHG”	J401
150	1150	Enable master motor drive in mutual operation	*101	“MEN0”	J402, J404
151	1151	Pump control motor 1	*101	“MEN1”	J411
152	1152	Pump control motor 2	*101	“MEN2”	J412
153	1153	Pump control motor 3	*101	“MEN3”	J413
154	1154	Pump control motor 4	*101	“MEN4”	J414
155	1155	Pump control motor 5	*101	“MEN5”	J415
156	1156	Pump control motor 6	*101	“MEN6”	J416
157	1157	Pump control motor 7	*101	“MEN7”	J417
158	1158	Pump control motor 8	*101	“MEN8”	J418
159	1159	For adjustment by manufacturer	*101	“ICSW”	-
160	1160	For adjustment by manufacturer	*101	“ICFB”	
161	1161	For adjustment by manufacturer	*101	“LCFB”	
169	1169	Initial diameter set command		“D-SET”	d158 to d166
170	1170	Winding diameter calculation hold command		“D-HLD”	
171	1171	PID control multistage command 1		“PID-SS1”	J136 to J138
172	1172	PID control multistage command 2		“PID-SS2”	
181	1181	Ext. PID multistep command 1	*101	“EPID-SS1”	J550 to J553

Assignment data		Defined function	Signal name	Related function code
Active				
ON	OFF			
182	1182	Ext. PID multistep command 2 *101	“EPID-SS2”	
190	1190	Cancel scheduled operation *101	“TMC”	T01, T06, T11, T16
191	1191	Enable schedule 1 *101	“TM1”	T01 to T04
192	1192	Enable schedule 2 *101	“TM2”	T06 to T09
193	1193	Enable schedule 3 *101	“TM3”	T11 to T14
194	1194	Enable schedule 4 *101	“TM4”	T16 to T19
201	1201	Ext. PID1 ON command *101	“EPID1-ON”	J501
202	1202	Cancel ext. PID1 *101	“%/EPID1”	J518 to J520
203	1203	Switch normal/inverse operation under ext. PID1 *101	“EPID1-IVS”	-
204	1204	Reset ext. PID1 integral and differential components *101	“EPID1-RST”	-
205	1205	Hold ext. PID1 integral component *101	“EPID1-HLD”	-
211	1211	Ext. PID2 ON command *101	“EPID2-ON”	J601
212	1212	Cancel ext. PID2 *101	“%/EPID2”	J618 to J620
213	1213	Switch normal/inverse operation under ext. PID2 *101	“EPID2-IVS”	-
214	1214	Reset ext. PID2 integral and differential components *101	“EPID2-RST”	-
215	1215	Hold ext. PID2 integral component *101	“EPID2-HLD”	-
221	1221	Ext. PID3 ON command *101	“EPID3-ON”	J651
222	1222	Cancel ext. PID3 *101	“%/EPID3”	J668 to J670
223	1223	Switch normal/inverse operation under ext. PID3 *101	“EPID3-IVS”	-
224	1224	Reset ext. PID3 integral and differential components *101	“EPID3-RST”	-
225	1225	Hold ext. PID3 integral component *101	“EPID3-HLD”	-

*100: Supported with ROM0300 or later.
*101: Supported with ROM0500 or later.
*102: Supported with ROM0600 or later.

Note

A negative logic (Active OFF) command cannot be assigned to the functions marked with “-” in the “Active OFF” column.

The “External alarm” (data = 1009) and “Force to stop” (data = 1030) are fail-safe terminal commands. In the case of “External alarm” when data = 1009, “Active ON” (alarm is triggered when ON); when data = 9, “Active OFF” (alarm is triggered when OFF).

FUNCTION
F Codes
E Codes
C Codes
P Codes
H Codes
A Codes
b Codes
r Codes
J Codes
d Codes
U Codes
y Codes
K Codes

Terminal function assignment and data setting

■ **Select multistep frequency "SS1", "SS2", "SS4", and "SS8" assignment (Function code data = 0, 1, 2, and 3)**

The combination of the ON/OFF states of digital input signals "SS1", "SS2", "SS4" and "SS8" selects one of 16 different frequency commands defined beforehand by 15 function codes C05 to C19 (Multistep frequency 1 to 15). With this, the inverter can drive the motor at 16 different preset frequencies.

(🕮 Function codes C05 to C19)

■ **Select ACC/DEC time "RT1" and "RT2" assignment (Function code data = 4 and 5)**

These terminal commands switch between ACC/DEC time 1 to 4 (F07, F08 and E10 through E15).

(🕮 Function codes F07, F08)

■ **Select 3-wire operation "HLD" assignment (Function code data = 6)**

This is used as the self-hold signal when performing 3-wire operation with the "FWD", "REV", and "HLD" signals.

(🕮 Function code F02)

■ **Coast to stop "BX" assignment (Function code data = 7)**

Turning "BX" ON immediately shuts down the inverter output. The motor free runs to a stop, without issuing any alarm.

■ **Reset alarm "RST" assignment (Function code data = 8)**

Turning this terminal command ON clears the ALM state--alarm output (for any alarm). Turning it OFF erases the alarm display and clears the alarm hold state. When you turn the "RST" command ON, keep it ON for 10 ms or more. This command should be kept OFF for the normal inverter operation.

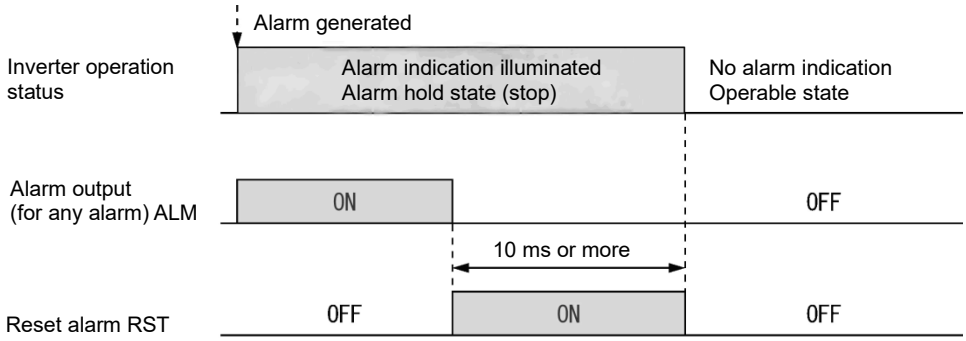

■ External alarm "THR" assignment (Function code data = 9)

Turning this terminal command OFF immediately shuts down the inverter output (so that the motor coasts to a stop), displays the alarm 0H2, and issues the alarm output (for any alarm) ALM. The THR command is self-held, and is reset when an alarm reset takes place.

Tip Use this alarm trip command from external equipment when you have to immediately shut down the inverter output in the event of an abnormal situation in peripheral equipment.

■ Ready for jogging "JOG" assignment (Function code data = 10)

This terminal command is used to jog or inch the motor for positioning a workpiece.

Turning this command ON makes the inverter ready for jogging.

(📖 Function code C20)

■ Select frequency setting 2/1 "Hz2/Hz1" assignment (Function code data = 11)

Turning this terminal command ON and OFF switches the frequency command source between frequency setting 1 (F01) and frequency setting 2 (C30).

(📖 Function code F01)

■ Motor selection 2/3/4 "M2/M3/M4" assignment (Function code data = 12, 36, 37)

Motor 1 to motor 4 can be selected with the "M2", "M3", and "M4" signals, or control parameters can be changed by switching the function code for motor 1 to motor 4.

(📖 Function codes A42, b42, r42)

■ DC braking command "DCBRK" assignment (Function code data = 13)

This terminal command gives the inverter a DC braking command through the inverter's digital input.

(Requirements for DC braking must be satisfied.)

(📖 Function codes F20 to F22)

■ Select torque limit 2/1 "TL2/TL1" assignment (Function code data = 14)

This terminal command switches between torque limiter 1-1, 1-2 (F40 and F41) and torque limiter 2-1, 2-2 (E16 and E17).

(📖 Function codes F40, F41)

■ Switch to commercial power (50 Hz) "SW50"/(60 Hz) "SW60" assignment (Function code data = 15, 16)

When an external sequence switches the motor drive power from the commercial line to the inverter, the terminal command SW50 or SW60 enables the inverter to start running the motor with the current commercial power frequency, regardless of settings of the reference/output frequency in the inverter. A running motor driven by commercial power is carried on into inverter operation. This command helps you smoothly switch the motor drive power source from the commercial power to the inverter power.

For details, refer to the table below, "Operation timing scheme", "Example of sequence circuit" and "Example of operation time scheme" on the following pages.

Terminal command assigned	Enable	
Switch to commercial power for 50 Hz "SW50"	Starts at 50 Hz.	Note: Do not concurrently assign both SW50 and SW60. A commercial power supply cannot be used to run synchronous motors.
Switch to commercial power for 60 Hz "SW60"	Starts at 60 Hz.	

<Operation timing scheme>

- When the motor speed remains almost the same during free run:

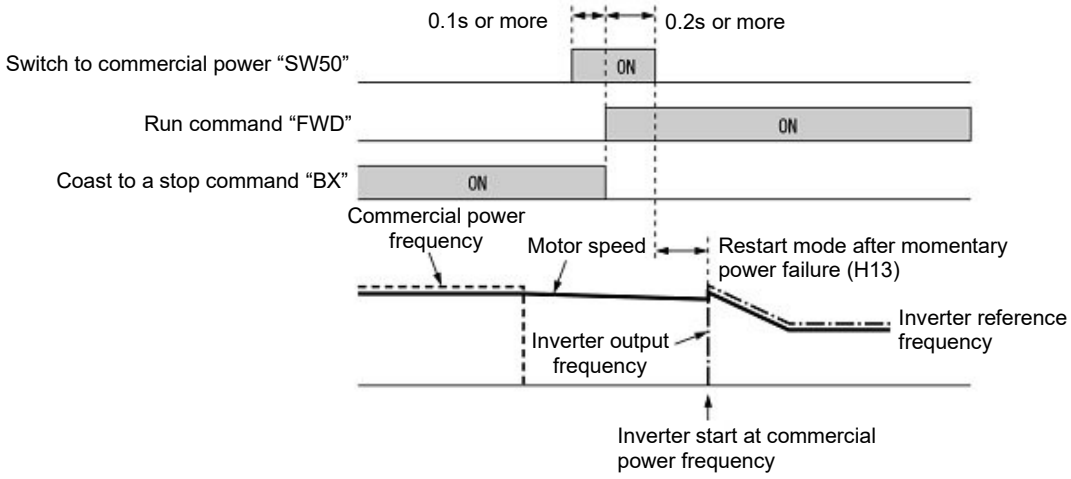

- When the motor speed decreases significantly during free run (with the current limiter activated)

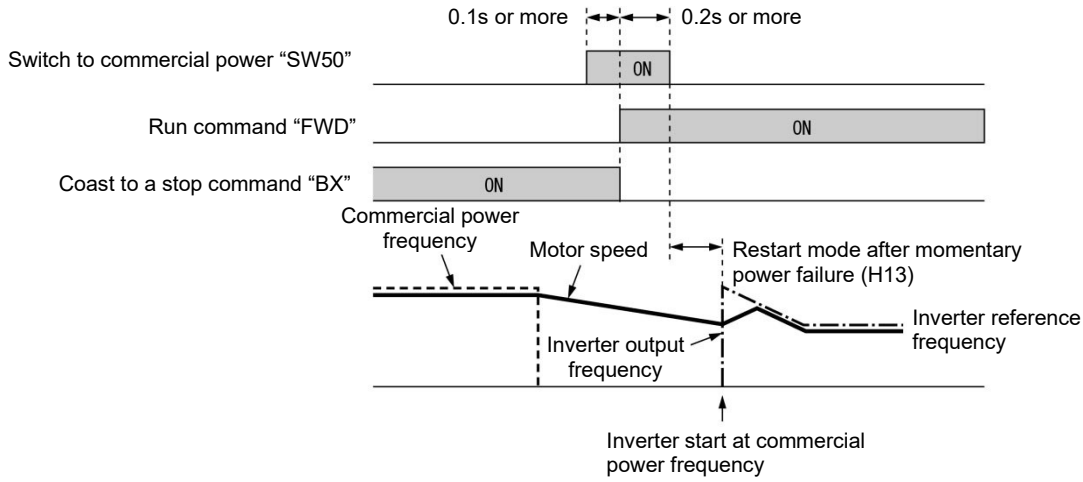

Note

- Secure more than 0.1 second after turning ON the “Switch to commercial power” signal before turning ON a run command.
- Secure more than 0.2 second of an overlapping period with both the “Switch to commercial power” signal and run command being ON.
- If an alarm has been issued or BX has been ON when the motor drive source is switched from the commercial power to the inverter, the inverter will not be started at the commercial power frequency and will remain OFF. After the alarm has been reset or “BX” turned OFF, operation at the frequency of the commercial power will not be continued, and the inverter will be started at the ordinary starting frequency.
  If you wish to switch the motor drive source from the commercial line to the inverter, be sure to turn “BX” OFF before the “Switch to commercial power” signal is turned OFF.
- When switching the motor drive source from the inverter to commercial power, adjust the inverter’s reference frequency at or slightly higher than that of the commercial power frequency beforehand, taking into consideration the motor speed down during the coast to stop period produced by switching.
- Note that when the motor drive source is switched from the inverter to the commercial power, a high inrush current will be generated, because the phase of the commercial power usually does not match the motor speed at the switching. Make sure that the power supply and all the peripheral equipment are capable of withstanding this inrush current.
- If you have enabled “Restart mode after momentary power failure” (F14 = 3, 4, or 5), keep “BX” ON during commercial power driven operation to prevent the inverter from restarting after a momentary power failure.

<Example of sequence circuit>

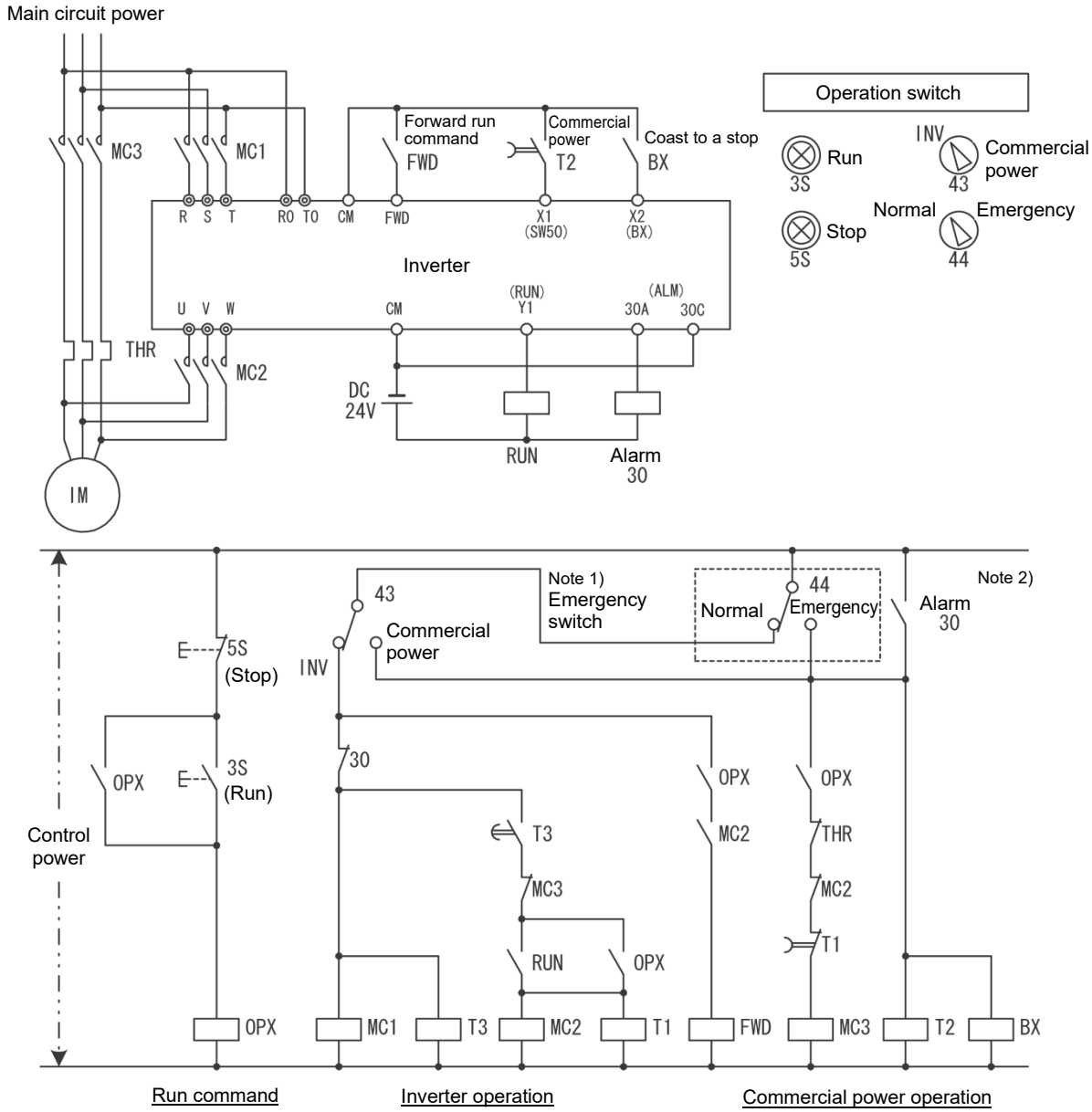

Note 1) Emergency switching

Manual switch provided for the event that the motor drive source cannot be switched normally to the commercial power due to a serious problem of the inverter.

Note 2) When any alarm has occurred inside the inverter, the motor drive source will automatically be switched to the commercial power.

FUNCTION
F Codes
E Codes
C Codes
P Codes
H Codes
A Codes
b Codes
r Codes
J Codes
d Codes
U Codes
y Codes
K Codes

<Example of operation time scheme>

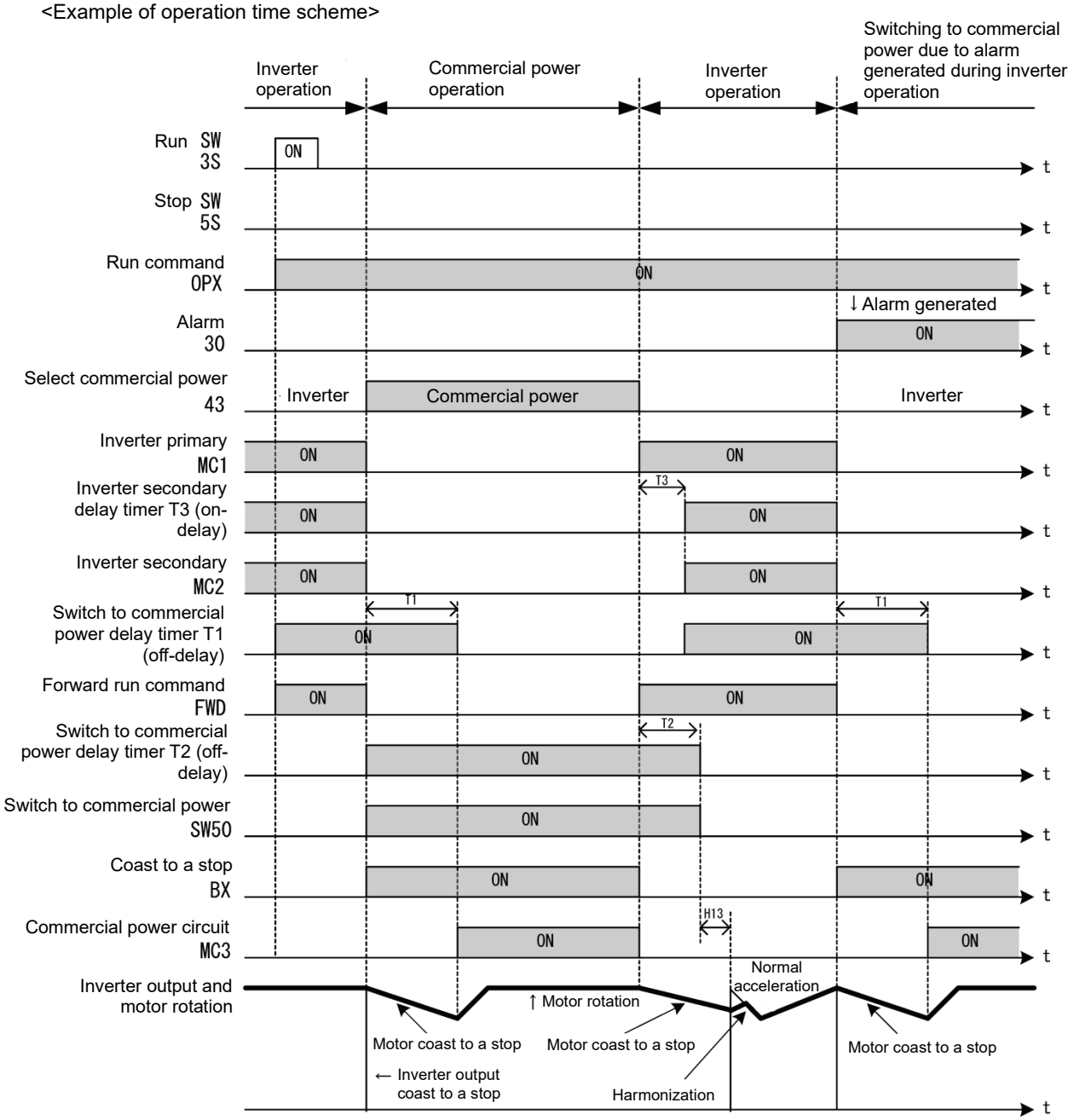

Tip Furthermore, built-in sequences can also used automatically inside the inverter for some of these series of operations.
Refer to the explanation on “ISW50”/”ISW60” for details.

■ **“UP” (Increase output frequency) and “DOWN” (Decrease output frequency) command assignment (Function code data = 17 and 18)**

- Frequency command: Turning the terminal command “UP” or “DOWN” ON causes the output frequency to increase or decrease, respectively, within the range from 0 Hz to the maximum output frequency. (📖 Function code F01 data = 7)
- PID command: Turning the terminal command “UP” or “DOWN” ON causes the PID command value to increase or decrease, respectively, within the range from 0 to 100 %.

■ **Allow function code editing “WE-KP” assignment (Function code data = 19)**

Turning the terminal command “WE-KP” OFF protects function code data from accidentally getting changed by pressing the keys on the keypad. Only when this terminal command is ON, you can change function code data from the keypad. (📖 Function code F00)

■ Cancel PID control "Hz/PID" assignment (Function code data = 20)

Turning this terminal command "Hz/PID" ON disables PID control. If the PID control is disabled with this command, the inverter runs the motor with the reference frequency manually set by any of the multistep frequency, keypad, analog input, etc.

Terminal command "Hz/PID"	Function
OFF	Enable PID control
ON	Disable PID control (Enable manual settings)

(📖 Function codes J01 to J19, J57 to J62)

■ Normal/inverse operation switching "IVS" assignment (Function code data = 21)

Switches between normal operation and inverse operation for analog frequency settings or PID control output signals (frequency settings).

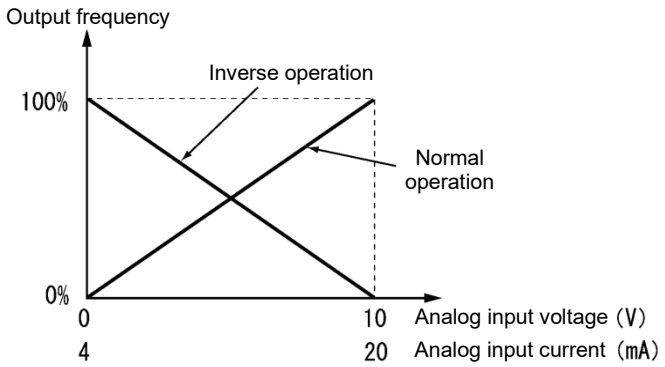

Tip The normal/inverse switching operation is useful for air-conditioners that require switching between cooling and heating. In cooling, the speed of the fan motor (output frequency of the inverter) is increased to lower the temperature. In heating, the speed of the fan motor (output frequency of the inverter) is reduced to lower the temperature. This switching is realized by the IVS.

- Analog frequency settings

With analog frequency settings, it is also possible to switch between normal operation and inverse operation with function codes C53 and C54. Operation will be as shown in the following table if used in combination with "IVS". C53 is a function code for F01: Frequency setting 1, and C54 is for C30: Frequency setting 2.

Reverse operation analog frequency settings

C53 (for F01), C54 (for C30) data	Terminal command "IVS"	Enable
0: Normal operation	OFF	Normal
0: Normal operation	ON	Inverse
1: Inverse operation	OFF	Inverse
1: Inverse operation	ON	Normal

FUNCTION
F Codes
E Codes
C Codes
P Codes
H Codes
A Codes
b Codes
r Codes
J Codes
d Codes
U Codes
y Codes
K Codes

- When process control is performed by the PID processor integrated in the inverter:

The terminal command Hz/PID ("Cancel PID control") can switch PID control between enabled (process is to be controlled by the PID processor) and disabled (process is to be controlled by the manual frequency setting). For each operation, inverse operation selection (frequency setting 1) (C53) and PID control operation selection (J01) can be combined with the normal operation/inverse operation switching "IVS" signal, and the decision as to whether to perform normal operation or inverse operation is made as shown in the following table.

When PID control is enabled: The normal/inverse operation selection for the PID processor output (reference frequency) is as follows.

PID control (Mode selection) (J01)	Terminal command "IVS"	Enable
1: Enable (normal operation)	OFF	Normal
	ON	Inverse
2: Enable (inverse operation)	OFF	Inverse
	ON	Normal

When PID control is disabled: The normal/inverse operation selection for the manual reference frequency is as follows.

Selection of normal/inverse operation for frequency setting 1 (C53)	Terminal command "IVS"	Enable
0: Normal operation	-	Normal
1: Inverse operation	-	Inverse

Note When process control is performed by the PID control facility integrated in the inverter, the "IVS" is used to switch the PID processor output (reference frequency) between normal and inverse, and has no effect on any normal/inverse operation selection of the manual frequency setting.
(📖 Function codes J01 to J19, J57 to J62)

■ Interlock "IL" assignment (Function code data = 22)

In a configuration where a magnetic contactor (MC) is installed in the power output (secondary) circuit of the inverter, the momentary power failure detection feature provided inside the inverter may not be able to accurately detect a momentary power failure by itself. Using a digital signal input with the interlock command IL assures the accurate detection. (📖 Function code F14)

Terminal command "IL"	Meaning
OFF	No momentary power failure has occurred.
ON	A momentary power failure has occurred. (Restart after a momentary power failure enabled) Restart mode after momentary power failure (mode selection)

■ Cancel torque control "Hz/TRQ" assignment (Function code data = 23)

When torque control is enabled (H18 = 2 or 3), assigning the terminal command "Hz/TRQ" (Cancel torque control) to any of the general-purpose digital input terminals (data = 23) enables switching between speed control and torque control.

Cancel torque control signal "Hz/TRQ"	Enable
ON	Cancel torque control (Enable speed control)
OFF	Enable torque control

■ Select link operation (RS-485, BUS option) "LE" assignment (Function code data = 24)

Turning this terminal command "LE" ON gives priority to frequency commands or run commands received via the RS-485 communications link (H30) or the fieldbus option (y98).

No LE assignment is functionally equivalent to the "LE" being ON.
(📖 Function codes H30, y98)

■ **Universal DI "U-DI" assignment (Function code data = 25)**

Universal DI "U-DI" assigned to digital input terminals allow to monitor signals from peripheral equipment connected to those inputs from an upper controller via an RS-485 or fieldbus communications link. Input terminals assigned to "U-DI" are simply monitored and do not operate the inverter.

📖 For an access to universal DI via the RS-485 or fieldbus communications link, refer to their respective Instruction Manuals.

■ **Select auto search for idling motor speed at starting "STM" assignment (Function code data = 26)**

This digital terminal command determines, at the start of operation, whether or not to search for idling motor speed and follow it. (📖 Function code H09)

■ **Force to stop "STOP" assignment (Function code data = 30)**

Turning this terminal command "STOP" OFF causes the motor to decelerate to a stop in accordance with the H56 data (Deceleration time for forced stop). After the motor stops, the inverter enters the alarm state with the alarm Er6 displayed. (📖 Function code F07)

■ **Pre-excite "EXITE" assignment (Function code data = 32)**

Turning this terminal command ON activates the pre-excitation feature. Even if this pre-excitation command is not assigned, specifying H85 (Pre-excitation: Time) to other than "0.00" enables the inverter to automatically start pre-excitation of the motor when it is turned ON. (This function is enabled when vector control with sensor is selected.) (📖 Function codes H84, H85)

■ **Reset PID integral and differential terms "PID-RST" assignment (Function code data = 33)**

By turning "PID-RST" ON, PID control, and PID control 1 and 2 PID controller derivative terms and integration terms are reset.

■ **Hold PID integral term "PID-HLD" assignment (Function code data = 34)**

When "PID-HLD" is ON, PID control, and PID control 1 and 2 PID controller integration terms are held.

■ **Local (keypad) command selection "LOC" assignment (Function code data = 35)**

This terminal command "LOC" switches the sources of run and frequency commands between remote and local.

📖 For details of switching between remote and local modes, refer to Chapter 3 "3.3.8 Switching between local and remote modes".

FUNCTION
F Codes
E Codes
C Codes
P Codes
H Codes
A Codes
b Codes
r Codes
J Codes
d Codes
U Codes
y Codes
K Codes

■ Run enable ”RE” assignment (Function code data = 38) *100

By assigning “RE” to a digital input, the inverter is not started with run command input alone. After inputting a run command, the “AX2” signal indicating that a run command has been input is output as soon as inverter operation preparation is complete. Actual inverter operation is started for the first time by inputting run permission “RE” after inputting the run command.

Input		Output	Inverter operating status
Run command (FWD, etc.)	Run permission “RE”	Run command entered “AX2”	
OFF	OFF	OFF	Stopped
OFF	ON	OFF	Stopped
ON	OFF	ON	Stopped
ON	ON	ON	Running

<Usage example>

The following sequence illustrates a typical usage example.

(1) Run command “FWD” is input to the inverter.
(2) When the run command is input, the inverter outputs run command entered “AX2” as a signal to indicated that it is ready for operation.
(3) The host device, upon being issued the run command entered “AX2” signal, prepares peripheral equipment (damper release, etc.) for operation.
(4) When the peripheral equipment is ready for operation, a run permission “RE” signal is input to the inverter.
(5) The inverter receives the run permission “RE” signal, and starts running.

■ Condensation prevention “DWP” assignment (Function code data = 39)

By turning on condensation prevention “DWP” when the motor is stopped, DC current flows to raise the motor temperature to prevent condensation forming. (🕮 Function code J21)

■ Switch to commercial power sequence (50 Hz) “ISW50”, Switch to commercial power sequence (60 Hz) “ISW60” assignment (Function code data = 40, 41)

A magnetic contactor is controlled with built-in sequences to switch between commercial power supply operation and inverter operation by selecting external command “ISW50” or “ISW60”.

This control is valid only when either “ISW50” or “ISW60” is assigned, and commercial power supply to inverter operation switching “SW88”, “SW52-2” are assigned with the output terminal assignment.

Either “ISW50” or “ISW60” is used depending on the commercial power supply frequency.

Refer to <Circuit diagram and configuration> and <Operation timing scheme> from the next page onward for details.

Terminal command assigned	Operation (when switching from commercial power supply to inverter startup)
Switch to commercial power sequence (50 Hz) “ISW50”	Startup at 50 Hz
Switch to commercial power sequence (60 Hz) “ISW60”	Startup at 60 Hz

Note Do not set both “ISW50” and “ISW60”. Operation will not be guaranteed if both are set.

<Circuit diagram and configuration>

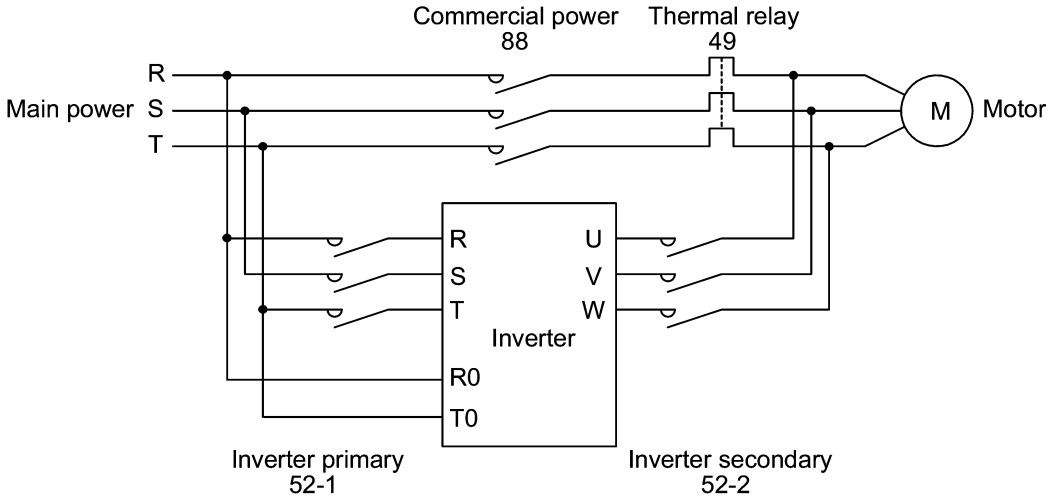

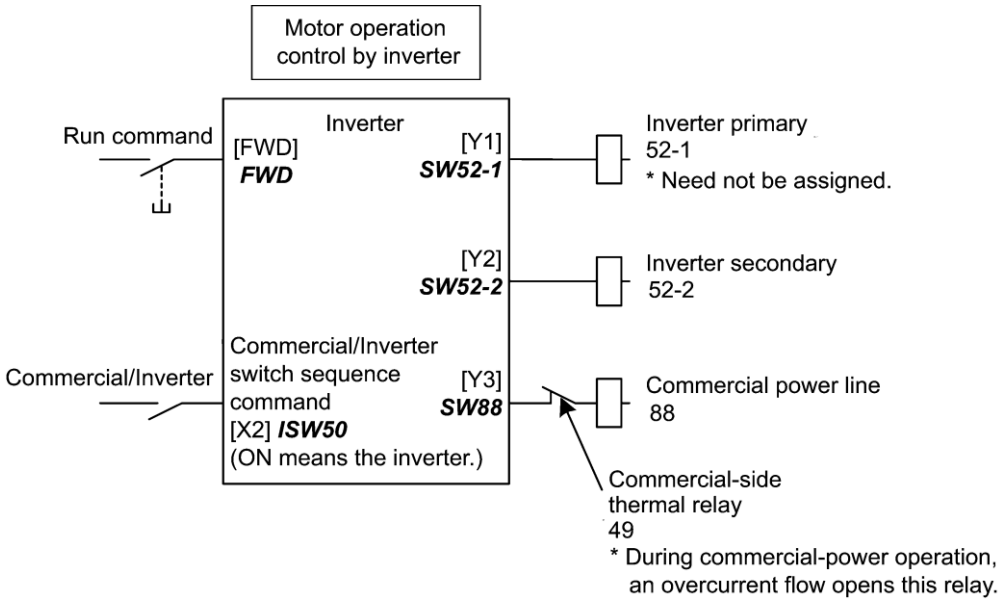

Operation input/output related table

Input		Output (magnetic contactors)			Inverter operation
“ISW50” / “ISW60”	Run command	“SW52-1”	“SW52-2”	“SW88”	
OFF (commercial power supply)	ON	OFF	OFF	ON	OFF
	OFF			OFF	
ON (inverter)	ON	ON	ON	OFF	ON
	OFF				OFF

<Operation timing scheme>

From inverter operation to commercial power supply operation (“ISW50”/"ISW60”: ON → OFF)

(1) Inverter output is cut immediately (gate OFF).

(2) “SW52-1”: Inverter primary circuit and “SW52-2”: Inverter secondary circuit are immediately turned OFF.

(3) After t1 (0.2 s + function code H13 setting time) has elapsed, “SW88”: Commercial power supply is turned ON if the run command is ON.

Commercial power supply operation to inverter operation (“ISW50”/"ISW60”: OFF → ON)

(1) “SW52-1”: Inverter primary circuit is immediately turned ON.

(2) “SW88”: Commercial power supply circuit is immediately turned OFF.

(3) After t2 (0.2 s + main circuit ready completion time) has elapsed since “SW52-1” turns ON, “SW52-2”: Inverter secondary circuit is turned ON.

(4) After fixed time t3 (0.2 s + function code H13 setting time) has elapsed since “SW52-2” turns ON, draw-in from the commercial frequency operation is performed by the inverter, and operation is restored to inverter operation at the set frequency.

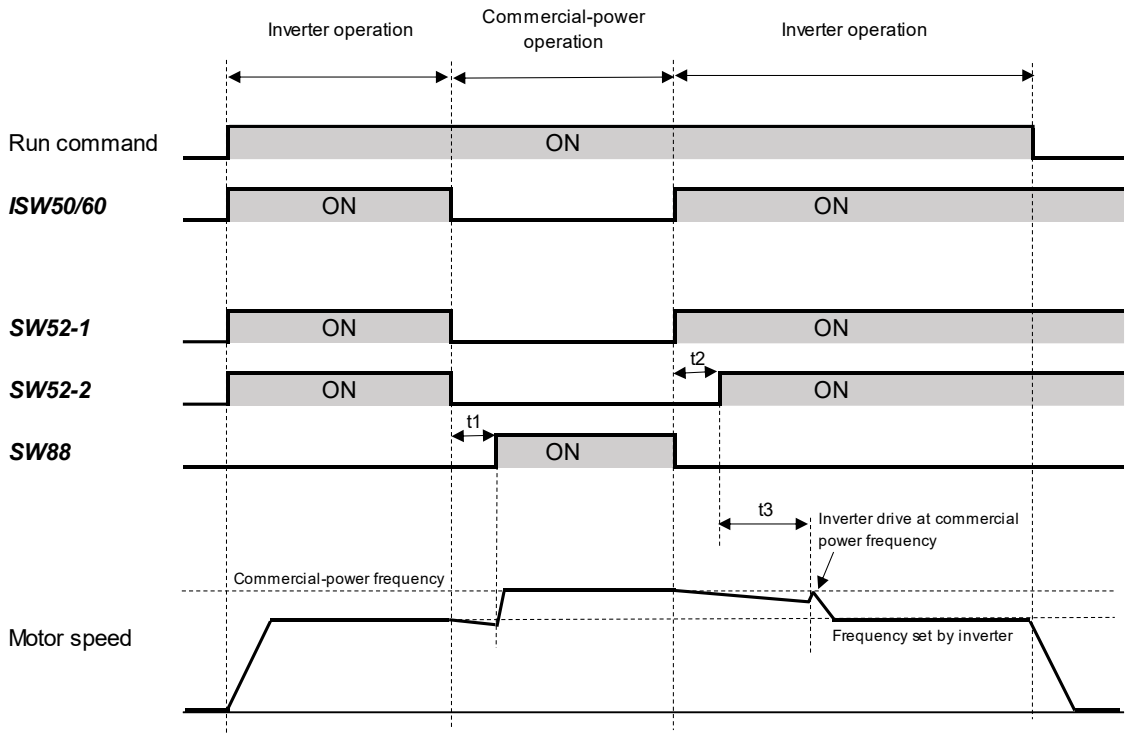

t1: 0.2 s + H13 (restart wait time following momentary power failure)

t2: 0.2 s + main circuit ready completion time

t3: 0.2 s + H13 (restart wait time following momentary power failure)

<Switch to commercial power sequence selection)
With function code J22, it is possible to select whether to automatically switch to commercial power supply operation when an inverter alarm occurs.

J22 data	Sequence (when alarm occurs)
0	Inverter operation continues (alarm stoppage)
1	Automatic switching to commercial power supply operation

Note

- The sequence functions normally without using “SW52-1”, even if the inverter main power is supplied constantly.
- If using “SW52-1”, connect control power auxiliary input terminal [R0] and [T0]. If “SW52-1” turns OFF without using [R0] and [T0], the control power supply will be lost. Furthermore, enable the instant restart function by setting a value of 2 to 5 for function code F14 to prevent an LV alarm occurring when the primary power supply is cut off.
- The sequence functions even when an alarm occurs, and may not function normally if the inverter is damaged. Prepare an external emergency switching circuit for important equipment.
- By turning ON the commercial power supply side contactor (88) and inverter output side (secondary side) contactor (52-2) simultaneously, the main power supply is input from the inverter output side (secondary side), and depending on the situation, the inverter may be damaged. Use an interlock for external circuits.

<Sequence example>
1) Standard sequence

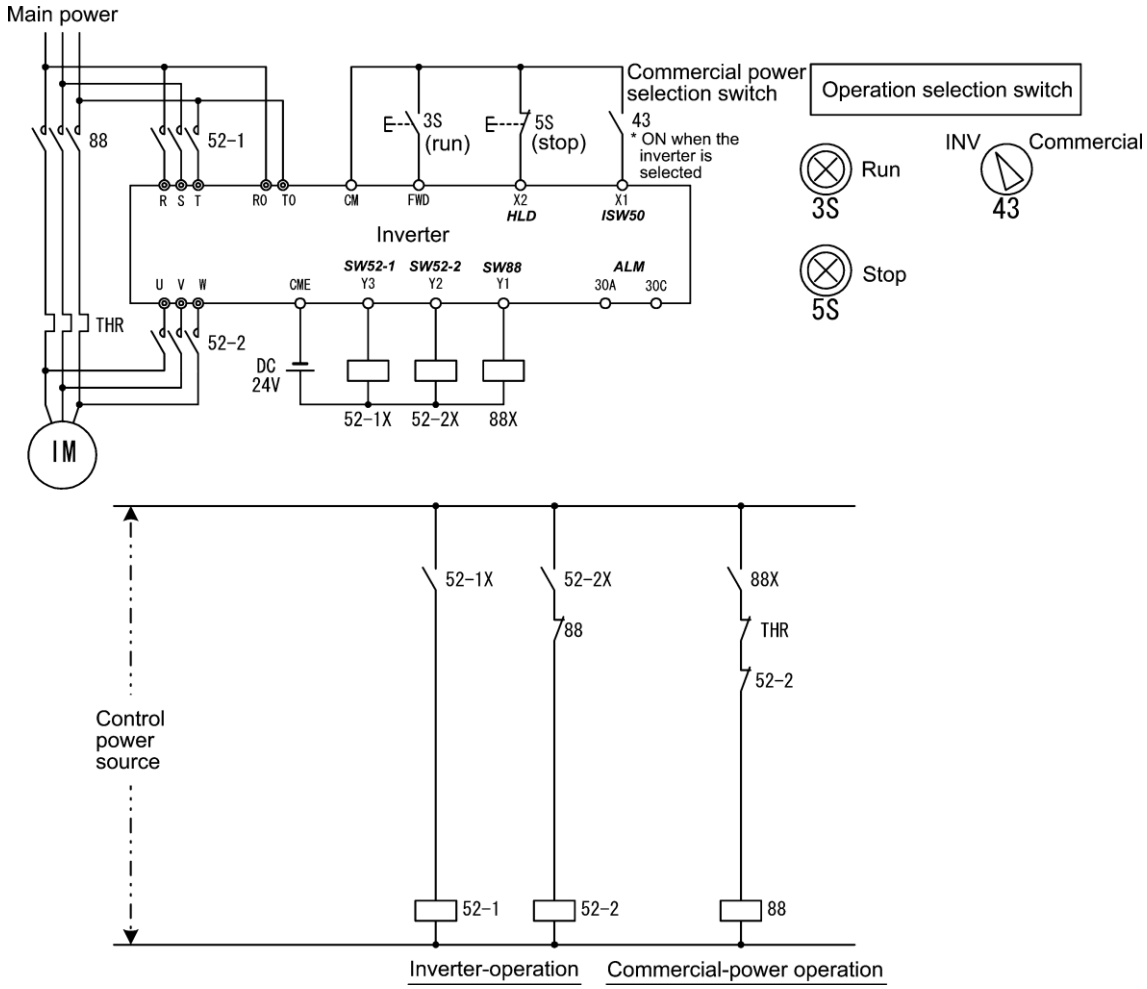

2) Sequence with emergency switching function

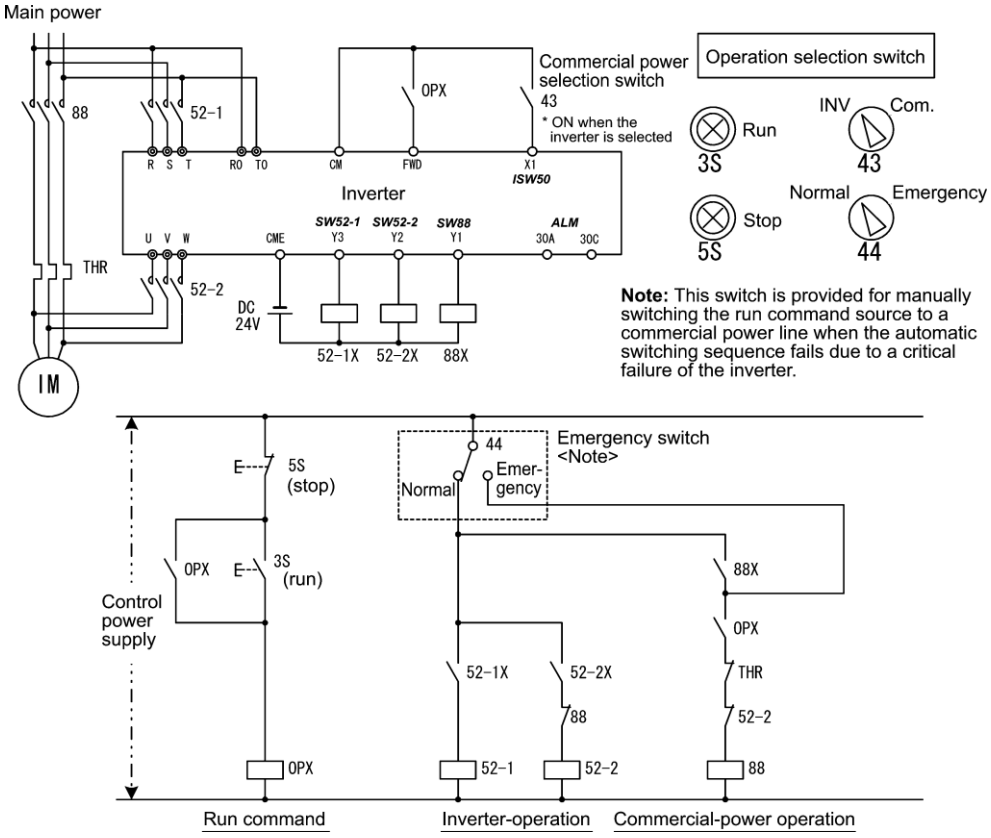

3) Sequence 2 with emergency switching function (with function for switching automatically when inverter outputs alarm)

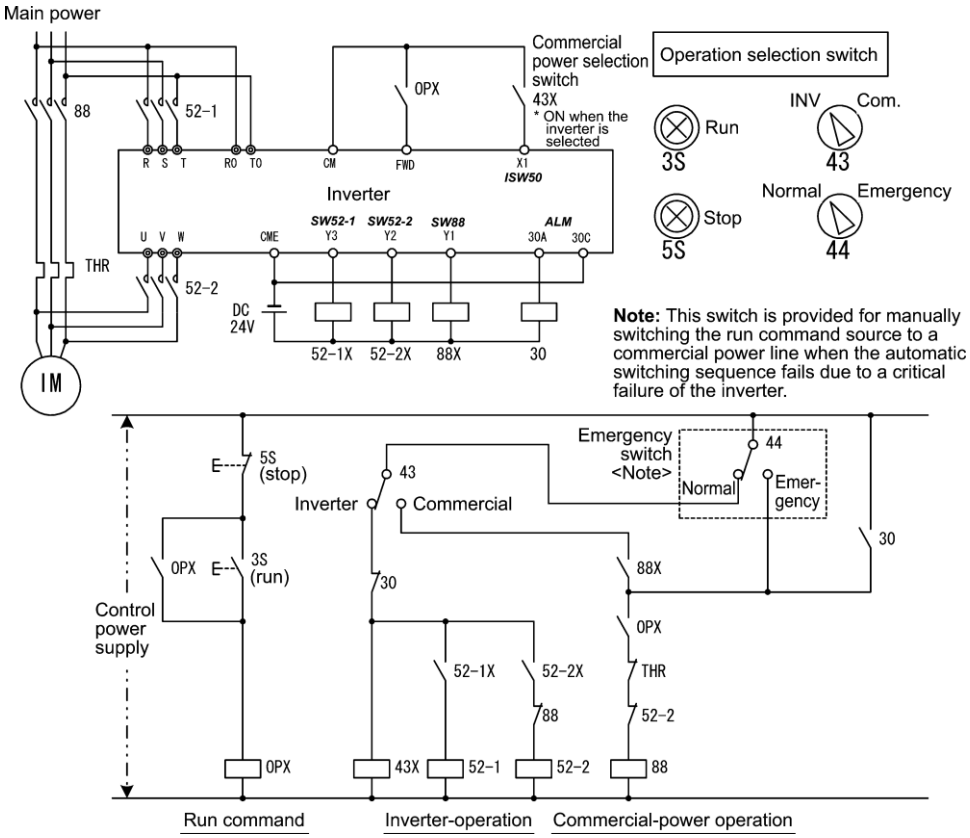

■ Home position limit switch “LS” assignment (Function code data = 42)

This is a home position limit switch signal used for position control.

🕮 Refer to function codes d201 to d299 for details on position control.

■ Enable overload stop “OLS” assignment (Function code data = 46)

Turning this terminal command ON enables the overload stop function; turning it OFF disables the function. If no OLS is assigned, the function is enabled.
(🕮 Function codes J63 to J67)

■ Servo-lock command “LOCK” assignment (Function code data = 47)

Turning this terminal command ON enables a servo-lock command; turning it OFF disables a servo-lock command.
(🕮 Function codes J97 to J99,d27,d28)

■ Pulse train input “PIN”, Pulse train sign “SIGN” assignment (Function code data = 48, 49)

Frequency setting by pulse train input is possible with terminal [X6] and [X7]. It is necessary to assign terminal [X6] and [X7] to pulse train input [PIN]. Assigning the command “SIGN” to one of the digital input terminals except [X6] and [X7] enables the pulse train sign input to specify the polarity of frequency command.
(🕮 Function code F01)

■ Clear running motor regular switching time “MCLR” assignment (Function code data = 50) *101

Clears the operation motor regular switching time when “MCLR” is ON.
(🕮 Function code J436)

■ UP/DOWN frequency clear “STZ” assignment (Function code data = 58)

If save initial value with frequency setting is selected (H61=1,3) with the UP/DOWN signal, the initial value is forcibly cleared to zero when this signal is turned ON.
(🕮 Function code F01)

■ Battery operation valid command “BATRY” assignment (Function code data = 59)

The Battery operation can drive the motor during undervoltage situation. This can realize rescue operation which rescues the passengers from the cage stopped halfway due to power failure in the lift application. When “BATRY” is assigned to the digital input terminal, the operation becomes same as F14 = 0 regardless of F14 setting, and the inverter trips immediately.

When “BATRY” is on, the input open phase protection operation becomes invalid regardless of the function code H98 bit 1 setting. Furthermore, main circuit power cutoff is also disabled regardless of the H72 function.

Battery operation is possible with FRN0008 to 0180G2S-2G and FRN0004 to 0179G2□-4G, and assumes that operation is performed by supplying the main power from the battery, and the control power as sine wave voltage or DC voltage from the auxiliary power terminals ([R0] to [T0]) .

Note

(1) Connect the battery power supply before or simultaneously with turning on the “BATRY” signal.

(2) Between the period from turning on of the “BATRY” signal and MC2 (and power supply start from the battery) to the state that the battery operation is possible, the delay time “T1” + “T2” indicated in the above “time chart” occurs.

(3) Do not turn on the “BATRY” signal when the voltage is same or higher than the specified undervoltage level (before LU is indicated after the power failure). If the “BATRY” signal is turned on with the voltage same or higher than the undervoltage value, the specified level, the short circuit for charging resistor 73X remains on.

(4) During the battery operation, avoid driving with application of the heavy load. Operate with no load or braking load. (Sufficient torque cannot be obtained by the battery voltage, and the motor may stall in such case.)

(5) Operate the motor at a low speed, and pay attention to the battery capacity.
In addition, when the high voltage is supplied (such as when 300 VDC power supply at 200V series inverter and 600 VDC power supply at 400V series inverter), operate normally without the battery.

(6) During the normal operation, it is required to turn off the “BATRY” signal. If the main power is turned on with the “BATRY” signal on, the 73X remains ON, causing the rectifier diode getting damaged.

FUNCTION
F Codes
E Codes
C Codes
P Codes
H Codes
A Codes
b Codes
r Codes
J Codes
d Codes
U Codes
y Codes
K Codes

■ **Battery operation (operation possible for FRN0008 to 0180G2S-2G and FRN0004 to 0179G2□-4G models)**

The motor can be operated by the inverter with undervoltage status by the battery power.

Note **Prerequisite of battery operation**

(1) Terminal function BATRY (data = 59) can be assigned to any digital input terminal.

(2) As shown in the connection diagram example below, DC link bus voltage is supplied from the battery to the main circuit ([L1/R] - [L3/T] or [L2/S] - [L3/T]).

(3) The specified voltage (sinusoidal waveform or DC voltage) is input to auxiliary power terminal ([R0] - [T0])

(4) The terminal that BATRY (data = 59) is assigned has to be turned on simultaneously with the MC2.

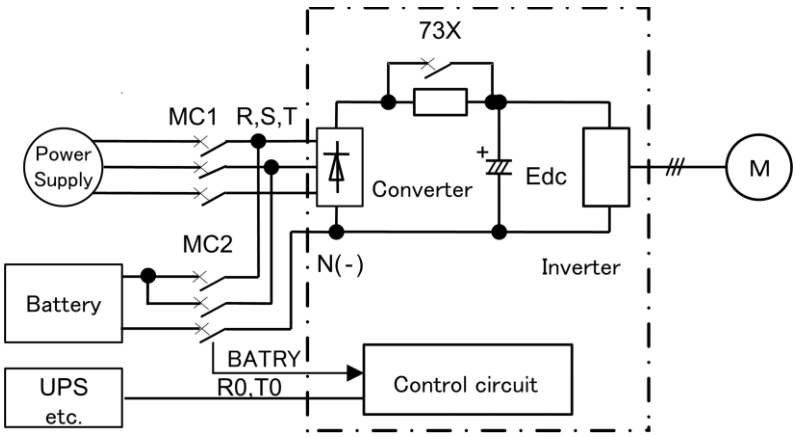

Connection diagram example

Battery operation (when “BATRY” = ON)

(1) Undervoltage protection function (LU) becomes non-operating status.

(2) The inverter can operate the motor even under the undervoltage condition.

(3) Operation ready complete RDY signal is turned off.

(4) The circuit of charging resistor is shorted (73X = ON) after the delay time T1 from the “BATRY” terminal being turned ON. (73X = ON). In addition, after the delay time T2 (max. 0.1 sec.), the battery operation starts. Refer to T1 below (time from “BATRY” on to 73X ON) for the T1 specifications.

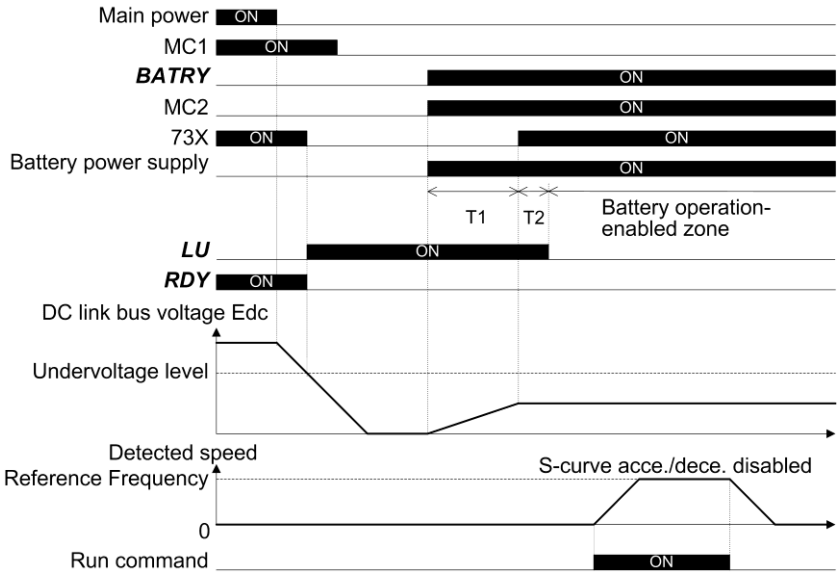

Battery operation timing chart

Time T1 from “BATRY” ON to 73X ON

Power supply condition	T1
Time required for turning on the control power supply, switching to the power supply from the battery, and then to turning on the charging resistor short circuit 73X	100 ms
Time required from the occurrence of momentary power failure in the control power supply ON status, switching to the power supply from the battery, and turning on of the short circuit 73X for the charging resistor	205 ms

(5) S-curve acceleration/deceleration becomes invalid.

(6) The speed at which operation is possible during battery operation is calculated based on the following formula.

$$\text{Frequency command during battery operation} \leq \frac{\text{Battery voltage -5 [V]}}{\sqrt{2}\ \text{x base voltage (F05)}} \text{ x Base frequency (F04) x K}$$

Here,

Battery voltage:	24 VDC or higher (200V series) 48 VDC or higher (400V series)
Rated frequency:	F04
Rated voltage:	F05 (Motor rated voltage (V))
K:	Safety factor (less than 1. Approx. 0.8)

■ **Select torque bias 1, 2 -- “TB1”, “TB2” (Function code data = 61, 62)**

The torque bias level can be selected from three types by combining the “TB1” and “TB2” signals, and is valid under vector control with sensor.

(📖 Function codes H154 to H162)

Input signal		Torque bias selection
“TB2”	“TB1”	
OFF	OFF	Disable torque-bias
OFF	ON	H155: Torque bias level 1
ON	OFF	H156: Torque bias level 2
ON	ON	H157: Torque bias level 3

■ **Hold torque bias -- “H-TB” (Function code data = 63)**

Turning this terminal command ON enables a torque bias hold command. This command directs to preserve the torque bias data supplied via an analog input.
(📖 Function codes H154 to H162)

■ **Check brake “BRKE” assignment (Function code data = 65)**

If the status of the brake signal BRKS fails to agree with the status of the brake check signal BRKE during inverter operation, the inverter enters an alarm stop state with Err6.

This signal is used as a feedback signal for the brake signal BRKS. When the mechanical brake does not operate, it causes the inverter to trip to activate the mechanical brake. The response delay time for BRKS and BRKE can be adjusted with H180: Brake response time. Furthermore, brake settings can be specified individually for forward rotation and reverse rotation with d120 to d125.

(📖 Function codes J68 to J96, H180, d120 to d125)

■ Cancel line speed control -- “Hz/LSC” (Function code data = 70)

Turning ON Hz/LSC cancels line speed control. This disables the frequency compensation of PI operation, resulting in no compensation for a take-up roll getting bigger and an increase in the winding speed. Use this signal to temporarily interrupt the control for repairing a thread break, for example.

“Hz/LSC”	Function
OFF	Enable line speed control (depending on d41 setting)
ON	Cancel line speed control(V/f control, without compensation for a take-up roll getting bigger)

(📖 Function code d41)

■ Hold line speed control frequency in the memory -- “LSC-HLD” (Function code data = 71)

If “**LSC/HLD**” is ON under line speed control frequency, stopping the inverter (including an occurrence of an alarm and a coast to stop command) or turning OFF “**Hz/LSC**” saves the current frequency command compensating for a take-up roll getting bigger, in the memory. At the time of restart, the saved frequency command applies and the inverter keeps the line speed constant.

“LSC-HLD”	Function
OFF	Disable (No saving operation)
ON	Enable (Saving the frequency command compensating for a take-up roll getting bigger)

Note Shutting down the inverter power during operation stop loses the frequency compensation data saved in the memory. At the time of restart, therefore, the inverter runs at the frequency without compensation so that a large overshoot may occur.

■ Input during operation with commercial power supply (motor 1 to 4) “CRUN-M1”, “CRUN-M2”, “CRUN-M3”, “CRUN-M4” (Function code data = 72 to 75)

These terminal commands enable the inverter to count the cumulative run time of motor-1 to motor-4 even when they are driven by commercial power (not by the inverter). When “CRUN-M1”, “CRUN-M2”, “CRUN-M3”, or “CRUN-M4” is ON, the inverter judges that the motor-1, motor-2, motor-3, or motor-4 is driven by commercial power, respectively, and counts the run time of the corresponding motor.
(📖 Function codes H94, A51, b51, r51)

■ Select droop control “DROOP” assignment (Function code data = 76)

This terminal command “DROOP” toggles droop control on and off.

Terminal command “DROOP”	Droop control
ON	Enable
OFF	Disable

(📖 Function code H28)

■ PG alarm cancel “PG-CCL” assignment (Function code data = 77)

PG wire break alarms are ignored when PG alarm cancel “PG-CCL” is ON. If PG wires are switched at such times as when replacing the motor, alarms are canceled so that wire break is not mistakenly detected. This function is valid only when using a PG interface card (OPC-PG2, OPC-PMPG2).

■ **Select speed control parameter 1, 2 "MPRM1", "MPRM2" assignment (Function code data = 78, 79)**

The combination of the ON/OFF states of digital input signals "**MPRM1**" and "**MPRM2**" selects one of 4 different level speed control parameter sets. These parameters are valid under vector control with speed sensor, V/f control with speed sensor, and sensorless vector control.

(📖 Function codes d01 to d08)

Input signal		Speed control constant
"MPRM2"	"MPRM1"	
OFF	OFF	Speed control constant 1: d01 to d06
OFF	ON	Speed control constant 2: A43 to A50
ON	OFF	Speed control constant 3: b43 to b50
ON	ON	Speed control constant 4: r43 to r50

■ **Cancel customizable logic "CLC" assignment (Function code data = 80), Clear all customizable logic timers "CLTC" assignment (Function code data = 81)**

Terminal command "CLC" stops the operation of customizable logic. Terminal command "CLTC" clears all customizable logic timers.
(📖 Function code U codes)

■ **Cancel anti-regenerative control "AR-CCL" assignment (Function code data = 82)**

Anti-regenerative control can be canceled with "AR-CCL". When "AR-CCL" is ON, the H69 setting is ignored, and anti-regenerative control is disabled.
(📖 Function code H69)

■ **PG input switching "PG-SEL" assignment (Function code data = 83)**

The PG option card command/feedback channel can be changed with "PG-SEL". Switching is possible only while the inverter is stopped. If terminal operation is performed while the inverter is running, it will stop before switching. This function cannot be used with synchronous motor drive with sensor.

• If using a dual system PG option card.

Input signal "PG-SEL"	Command	Feedback
OFF	[XA]/[XB]	[YA]/[YB]
ON	[YA]/[YB]	[XA]/[XB]

• If using a single system PG option card

Input signal "PG-SEL"	Command	Feedback
OFF	-	[YA]/[YB]
ON	[YA]/[YB]	-

(📖 Function code F01)

Usage example

If switching between two motors with encoder, an external switching circuit is installed for both the motor and encoder, but with dual system PG option cards, the encoder switching circuit will not be necessary if using this function.

■ **Acceleration/deceleration cancel "BPS" assignment (Function code data = 84)**

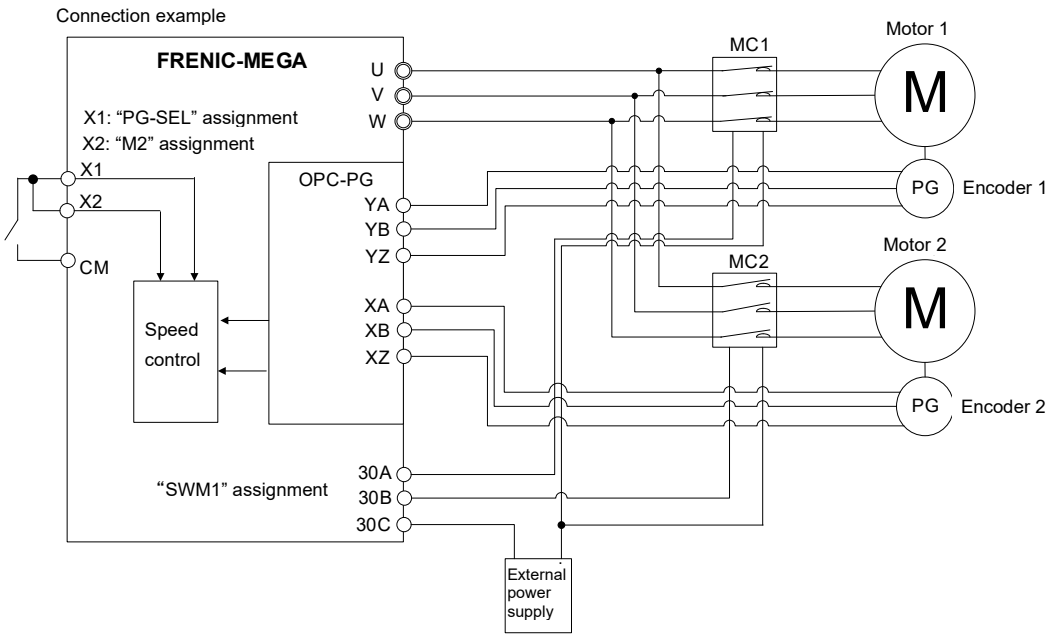

■ **Acceleration/deceleration cancel (bypass) "BPS" assignment (Function code data = 84)**

By turning "BPS" ON, the currently selected acceleration/deceleration time is interpreted as zero, and the set frequency is immediately output. This does not happen during PID control. This does not work for acceleration/deceleration time set individually for jogging operation or forced stop. This signal can be turned ON during operation.
(📖 Function code F07)

■ **Run command 2/1 "FR2/FR1" assignment (Function code data = 87) *100**

The run command method selected with the run command ("FWD", "REV") and run command 2 ("FWD2", "REV2") can be changed with the "FR2/FR1" signals. These can be used for issuing run commands remotely, and for changing the panel surface, etc.

Refer to the block diagram in Chapter 8 "8.3 Operation Command Section" for details.

"FR2/FR1"	Run command setting method	
	When communication disabled (normal)	When communication enabled
OFF	Based on F02 setting	S06: based on FWD/REV
ON	"FWD2", "REV2"	S06: based on FWD2/REV2

■ **Run forward / stop 2 assignment (Function code data = 88) *100**

When "FR2/FR1" is ON, the motor rotates in the forward direction when "FWD2" is ON, and decelerates to a stop when OFF.

■ **Run reverse / stop 2 "REV2" assignment (Function code data = 89) *100**

When "FR2/FR1" is ON, the motor rotates in the reverse direction when "REV2" is ON, and decelerates to a stop when OFF.

■ **Jogging forward operation/stop command "FJOG", Jogging reverse operation/stop command "RJOG" assignment (Function code data = 94, 95)**

This is valid only when performing terminal block operation (F02 = 1). Jogging operation can be performed in the forward direction or reverse direction with "FJOG" and "RJOG". By turning this signal ON, the inverter runs at the

frequency selected with C20. The acceleration/deceleration time is set with H54 and H55. There is no need to turn ON the “JOG” terminal.
(📖 Function code C20)

■ **Forward rotation/reverse rotation selection “DIR” assignment (Function code data = 97)**

This is valid only when performing terminal block operation (F02 = 1). By turning “DIR” ON, the command can be changed to a direction run command opposite to the run command direction set with terminals [FWD] and [REV]. Switching is possible during operation. This signal can also be used in combination with “HLD”. This signal is invalid for communication commands and run commands from the keypad.
(📖 Function code F02)

■ **Run forward “FWD” assignment (Function code data = 98)**

Turning this terminal command ON runs the motor in the forward direction; turning it OFF decelerates it to stop.

Tip This terminal command “FWD” can be assigned only to E98 or E99.

■ **Run reverse “REV” assignment (Function code data = 99)**

Turning this terminal command “REV” ON runs the motor in the reverse direction; turning it OFF decelerates it to stop.

Tip This terminal command “REV” can be assigned only to E98 or E99.

■ **No function assigned “NONE” assignment (Function code data = 100)**

It allows the inverter to run unaffected by ON/OFF of signals. It is used when a signal is externally input using customizable logic. It is also used to temporarily disable a terminal function.

■ **Light load automatic double speed judgment permission “LAC-ENB” assignment (Function code data = 105)**

This is used with the hoist function. Refer to the hoist function explanation for details.
(📖 Function code d170)

■ **Servo lock gain selection “SLG2” assignment (Function code data = 110)**

By turning “SLG2” ON, servo lock gain is changed to servo lock gain 2. Switching is possible during operation.

Input signal “SLG2”	Servo lock gain
OFF	J97
ON	d28

(📖 Function codes J97, d28)

■ **Forced stop (for control terminals) “STOP-T” assignment (Function code data = 111)**

Turning this terminal command “STOP-T” OFF causes the motor to decelerate to a stop in accordance with the H56 data (Deceleration time for forced stop). After the motor stops, the inverter enters the alarm state with the alarm Er6 displayed. This provides the same function as “STOP”, but is a dedicated signal for control terminals (actual terminals), and does not function with communication commands.
(📖 Function code F07)

■ **AVR cancel “AVR-CCL” assignment (Function code data = 116)**

Input signal “AVR-CCL”	AVR operation
OFF	Based on F05 setting value
ON	Disable (same operation as F05 = 0)

■ **Speed regulator P selection “P-SEL” assignment (Function code data = 119)**

Position control is performed with the P term only, and the integration term is canceled.

This is used to avoid any adverse effects caused by the integration term while the brake is ON.

🕮 Refer to function codes d201 to d299 for details on position control.

■ **Customizable logic input signal 1 to 9 “CLI1” to “CLO9” assignment (Function code data = 121 to 129)**

It allows the inverter to run unaffected by ON/OFF of signals. It is used when a signal is externally input using customizable logic.
(🕮 Function code U00)

■ **Boost command “BST” assignment (Function code data = 130) *101**

The boost function is enabled when “BST” is ON.(🕮 Function code J143 to J147)

■ **Flowrate switch “FS” assignment (Function code data = 131) *101**

This is used as a flow switch. This is used for the Dry Pump Protection and End of Protection.
(🕮 Function code J163 to J166)

■ **Filter clogging reverse rotation command “FRC” assignment (Function code data = 132) *101**

The filter clogging prevention function runs when “FRC” is ON. Forward and reverse rotation is repeated for the reverse rotation operation time (J194). When rotating in the forward direction, the motor is run with PID control, and when rotating in the reverse direction, the motor is run with PID control cancel (from reverse rotation deceleration to PID control). Operation is restored to PID control when “FRC” is OFF.(🕮 Function code J188 to J195)

■ **Switch PID channel “PID2/1” assignment (Function code data = 133) *101**

A “PID2/1” signal is used to switch between PID control 1 (J101 to J13) and PID control 2 (J201 to J231).

Switching is not performed when J01 ≠ 0.

*101: Supported with ROM0500 or later.

■ **Forced operation “FMS” assignment (Function code data = 134)**

By turning “FMS” ON, almost all inverter protective operations are disabled, and inverter output continues until a fault occurs. This is used when not wishing to trip inverters in such cases as when using with emergency exhaust equipment.
(🕮 Function codes H116 to H121)

■ **Position control related function “INC/ABS” assignment (Function code data = 135 to 147)**

This signal is used with position control.

🕮 Refer to function codes d201 to d299 for details on position control.

■ **Switch pump control “PCHG” assignment (Function code data = 149) *101**

This signal is used with pump control.

🕮 Refer to function code J401 for details on pump control.

■ **Enable master motor drive in mutual operation “MEN0” assignment (Function code data = 150) *101**

This signal is used with pump control.

🕮 Refer to function code J401 for details on pump control.

■ **Pump control motor 1 to 8 “MEN1” to “MEN8” assignment (Function code data = 151 to 158)*101**

This signal is used with pump control.

🕮 Refer to function code J401 for details on pump control.

■ **For adjustment by manufacturer (Function code data = 159 to 161) *101**

This is for adjustment by the manufacturer. Do not specify a setting for this value.

Initial diameter set command “D-SET” assignment (Function code data = 169)

■ **Winding diameter calculation hold command “D-HLD” assignment (Function code data = 170)**

This signal is used with winding diameter calculation used to calculate the roll winding diameter from the peripheral speed (line speed) and roll rotation speed when performing constant surface speed control.
(🕮 Function codes d158 to d166)

■ **PID control multistage command 1, 2 “PID-SS1”, “PID-SS2” assignment (Function code data = 171, 172)**

“PID-SS1” and “PID-SS2” can be used to select 4 different PID commands.
(🕮 Function codes J136 to J138)

■ **Ext. PID multistep command1, 2 “EPID-SS1”, “EPID-SS2” assignment (Function code data = 181, 182) *101**

It is possible to switch between 4 levels of PID commands with a “EPID-SS1” and “EPID-SS2” signals used as preset values for external PID control commands.

(🕮 Function code J550 to J553)

■ **Cancel scheduled operation “TMC” assignment (Function code data = 190) *101**

Scheduled operation can be canceled when “TMC” is ON.
(🕮 Function code T01～T19)

■ **Enable schedule 1 to 4 有効 “TM1” to ”TM4” assignment (Function code data = 191 to 194) *101**

All scheduled operation is enabled when “TM1” to “TM4” are ON. Details of scheduled operation are shown below.
(🕮 Function code T01～T19)

External input signal input status				Scheduled operation details
“TM1”	“TM2”	“TM3”	“TM4”	
OFF	OFF	OFF	OFF	
ON	OFF	OFF	OFF	Schedule 1
OFF	ON	OFF	OFF	Schedule 2
OFF	OFF	ON	OFF	Schedule 3
OFF	OFF	OFF	ON	Schedule 4
ON	ON	OFF	OFF	Schedule 1+2
ON	OFF	ON	OFF	Schedule 1+3
ON	OFF	OFF	ON	Schedule 1+4
OFF	ON	ON	OFF	Schedule 2+3
OFF	ON	OFF	ON	Schedule 2+4
OFF	OFF	ON	ON	Schedule 3+4
ON	ON	ON	OFF	Schedule 1+2+3
ON	ON	OFF	ON	Schedule 1+2+4
ON	OFF	ON	ON	Schedule 1+3+4
OFF	ON	ON	ON	Schedule 2+3+4
ON	ON	ON	ON	Schedule 1+2+3+4

FUNCTION
F Codes
E Codes
C Codes
P Codes
H Codes
A Codes
b Codes
r Codes
J Codes
d Codes
U Codes
y Codes
K Codes

■ **Ext. PID1 ON command "EPID1-ON" assignment (Function code data = 201) *101**

If turning external PID ON and OFF with the terminal function (J501 = 21, 22, 31, 32), external PID control 1 runs when "EPID1-ON" is ON.(🕮 Function code J501)

■ **Cancel ext. PID1 "%/EPID1" assignment (Function code data = 202) *101**

With "%/EPID1" ON, the inverter switches from external PID control 1 to manual commands (with keypad entry, analog input).(🕮 Function code J540)

Input signal "%/EPID1"	Selected function
OFF	External PID control 1 enable
ON	External PID control 1 disable (manual command)

■ **Switch normal/inverse operation under ext. PID1 "EPID1-IVS" assignment (Function code data = 203) *101**

Switches the external PID control 1 output signal between normal operation and inverse operation.

■ **Reset ext. PID1 integral and differential components "EPID1-RST" assignment (Function code data = 204)*101**

By turning "EPID1-RST" ON, the external PID control 1 PID controller differential term and integration term are reset.
(🕮 Function codes J501 to J540)

■ **Hold ext. PID1 integral component "EPID1-HLD" assignment (Function code data = 205) *101**

When "EPID1-HLD" is ON, the external PID control 1 PID controller integration term is held.
(🕮 Function codes J501 to J540)

■ **Ext. PID2 ON command "EPID2-ON" assignment (Function code data = 211) *101**

If turning external PID ON and OFF with a terminal function (J601 = 21, 22, 31, 32), external PID control 2 runs when "EPID2-ON" is ON. (🕮 Function code J601)

■ **Cancel ext. PID2 "%/EPID2" assignment (Function code data = 212) *101**

With "%/EPID2" ON, the inverter switches from external PID control 2 to manual commands (runs at frequency selected with keypad, analog input, PID control 1 manual commands, etc.) (🕮 Function codes J601 to J640)

Input signal "%/EPID2"	Selected function
OFF	External PID control 2 enable
ON	External PID control 2 disable (manual frequency setting)

■ **Switch normal/inverse operation under ext. PID2 "EPID2-IVS" assignment (Function code data = 213) *101**

Switches the external PID control 2 output signal between normal operation and inverse operation.

■ **Reset ext. PID2 integral and differential components "EPID2-RST" assignment (Function code data = 214) *101**

By turning "EPID2-RST" ON, the external PID control 2 PID controller differential term and integration term are reset.
(🕮 Function codes J601 to J640)

■ **Hold ext. PID2 integral component "EPID2-HLD" assignment (Function code data = 215) *101**

When "EPID2-HLD" is ON, the external PID control 2 PID controller integration term is held.
(📖 Function codes J601 to J640)

■ **Ext. PID3 ON command "EPID3-ON" assignment (Function code data = 221) *101**

If turning external PID ON and OFF with a terminal function (J651 = 21, 22, 31, 32), external PID control 3 runs when "EPID3-ON" is ON. (📖 Function code J651)

■ **Cancel ext. PID3 "%/EPID3" assignment (Function code data = 222) *101**

With "%/EPID3" ON, the inverter switches from external PID control 3 to manual frequency commands (runs at frequency selected with keypad, analog input, PID control 1 manual commands, PID control 2 manual commands, etc.)
(📖 Function codes J651 to J690)

Input signal "%/EPID3"	Selected function
OFF	External PID control 3 enable
ON	External PID control 3 disable (manual frequency setting)

■ **Switch normal/inverse operation under ext. PID3 "EPID3-IVS" assignment (Function code data = 223) *101**

Switches the external PID control 3 output signal between normal operation and inverse operation.

■ **Reset ext. PID3 integral and differential components "EPID3-RST" assignment (Function code data = 224) *101**

By turning "EPID3-RST" ON, the external PID control 3 PID controller differential term and integration term are reset.
(📖 Function codes J651 to J690)

■ **Hold ext. PID3 integral component "EPID3-HLD" assignment (Function code data = 225) *101**

When "EPID3-HLD" is ON, the external PID control 3 PID controller integration term is held.
(📖 Function codes J651 to J690)

*100: Supported with ROM0300 or later.
*101: Supported with ROM0500 or later.

E10 to E15	Acceleration time 2 to 4, Deceleration time 2 to 4 (Refer to F07)

Acceleration/deceleration time 2 to 4 settings are described in detail at the function code F07 section.

E16, E17	Torque limiter 2 (driving), 2 (braking) (Refer to F40)

For the torque limiter 2 (driving) and 2 (braking) settings, refer to the description of F40.

E20 to E23 E24, E27	Terminal [Y1] to [Y4](Function selection) Terminal [Y5A/C], [30A/B/C] (Ry output)

E20 through E24 and E27 assign output signals to general-purpose, programmable output terminals [Y1] to [Y4], [Y5A/C] and [30A/B/C]. These function codes can also switch the logic system between normal and negative to define how the inverter interprets the ON or OFF state of each terminal.

The factory default setting is normal logic system "Active ON." Terminals [Y1] to [Y4] are transistor outputs, and terminals [Y5A/C] and [30A/B/C] are contact outputs. In normal logic, if an alarm occurs, the relay will be energized so that [30A] and [30C] will be closed, and [30B] and [30C] opened. In negative logic, the relay will be de-energized so that [30A] and [30C] will be opened, and [30B] and [30C] closed. This may be useful for the implementation of failsafe power systems.

Note

- When negative logic is employed, output signal is OFF (active) while the inverter is powered OFF. To avoid causing system malfunctions by this, interlock these signals to keep them ON using an external power supply. Furthermore, the validity of these output signals is not guaranteed for approximately 1.5 seconds (for FRN0003 to 0115G2S-2G/FRN0002 to 0060G2□-4G) or 3 seconds (for FRN0146 to 0432G2S-2G/FRN0085 to 1480G2□-4G) after power-ON, so introduce such a mechanism that masks them during the transient period.
- Contact outputs (terminal [Y5A/C], [30A/B/C]) are mechanical contacts. They cannot stand frequent ON/OFF switching. Where frequent ON/OFF switching is anticipated (for example, by using frequency arrival signal), use transistor outputs [Y1] to [Y4] instead.
  The service life of a relay is approximately 200,000 times if it is switched ON and OFF at one-second intervals. For signals expected to be turned ON/OFF frequently, use terminals [Y1] to [Y4] for output.

The tables given on the following pages list functions that can be assigned to terminals [Y1] to [Y4], [Y5A/C], and [30A/B/C]. Each signal has been described at data allocation order. However, the signal is related has been described together. Refer to the function codes or signals in the “Related function codes/signals (data)” column, if any.

Explanations of each function are given in normal logic system “Active ON.”

With terminal functions for which Y is indicated for E71 (keypad M-LE indicator) in the “5.2-4 Control input terminal setting list table” under “[2] E codes” in “5.2.2 Function code tables”, by setting the same data as in E20 to E24 and E27 for function code E71, signals can be monitored with keypad M-LEDs. Refer to the explanation on function code E71 for details.

Assignment data		Defined function	Signal name	Related function codes/related signals (data)
Active				
ON	OFF			
0	1000	Change	"RUN"	-
1	1001	Frequency (speed) arrival	"FAR"	E30
2	1002	Frequency (speed) detected	“FDT”	E31, E32
3	1003	Undervoltage detected (Inverter stopped)	"LU”	-
4	1004	Detected torque polarity	“B/D”	-
5	1005	Inverter output limiting	"IOL"	-
6	1006	Auto-restarting after momentary power failure	"IPF"	F14
7	1007	Motor overload early warning	"OL"	E34, F10, F12
8	1008	Keypad operation	"KP"	-
10	1010	Inverter ready to run	"RDY"	-
11	-	Commercial/inverter operation switching (commercial power supply side magnetic contactor)	“SW88”	-
12	-	Commercial/inverter operation switching (inverter output side)	“SW52-2”	
13	-	Commercial/inverter operation switching (inverter input side)	“SW52-1”	
15	1015	AX terminal function (for input side magnetic contactor)	"AX"	-
16	1016	Pattern operation stage transition	"TU"	C21, C22 to C28
17	1017	Pattern operation cycle completed	"TO"	
18	1018	Pattern operation stage No. 1	“STG1”	
19	1019	Pattern operation stage No. 2	“STG2”	
20	1020	Pattern operation stage No. 4	“STG4”	
21	1021	Frequency (speed) arrival 2	“FAR2”	E29
22	1022	Inverter output limiting (with delay)	“IOL2”	IOL (5)
25	1025	Cooling fan ON-OFF control	"FAN"	H06

Assignment data		Defined function	Signal name	Related function codes/related signals (data)
Active				
ON	OFF			
26	1026	Auto-resetting	"TRY"	H04, H05
27	1027	Universal DO	“U-DO”	-
28	1028	Cooling fin overheat early warning	"OH"	-
29	1029	Synchronization completed	"SY"	d17 to d78
30	1030	Lifetime alarm	"LIFE"	H42
31	1031	Frequency (speed) detection 2	“FDT2”	E32, E36
33	1033	Reference loss detected	“REF OFF”	E65
35	1035	Inverter outputting	“RUN2”	“RUN” (0)
36	1036	Overload prevention controlling	"OLP"	H70
37	1037	Current detected	"ID"	E34, E35
38	1038	Current detected 2	“ID2”	E37, E38
39	1039	Current detected 3	“ID3”	E55, E56
41	1041	Low current detected	"IDL"	E37, E38
42	1042	PID alarm output	“PID-ALM”	J11 to J13
43	1043	Under PID control	“PID-CTL”	J01
44	1044	Under sleep mode of PID control	“PID-STP”	J08, J09
45	1045	Low torque detection	“U-TL”	E89, E81
46	1046	Torque detected 1	“TD1”	E78, E79
47	1047	Torque detected 2	“TD2”	E80, E81
48	1048	Motor 1 selected	“SWM1”	A42, b42, r42
49	1049	Motor 2 selected	“SWM2”	
50	1050	Motor 3 selected	“SWM3”	
51	1051	Motor 4 selected	“SWM4”	
52	1052	Performing forward rotation	"FRUN"	-
53	1053	Performing reverse rotation	"RRUN"	-
54	1054	In remote mode	"RMT"	(Refer to Section 3.3.8)
55	1055	Run command entered *100	"AX2"	-
56	1056	Motor overheat detected by thermistor	"THM"	H26, H27
57	1057	Machine brake signal	"BRKS"	J68 to J72 d120 to d125
58	1058	Frequency (speed) detection 3	“FDT3”	E32, E54
59	1059	Terminal [C1] wire break detection	“C1OFF”	-
68	1068	Motor regular switching early warning *101	“MCHG”	J401 to J493
69	1069	Pump control output limit signal *101	“MLIM”	
70	1070	Speed valid	"DNZS"	F25, F38
71	1071	Speed agreement	"DSAG"	d21, d22
72	1072	Frequency (speed) arrival 3	“FAR3”	E30
76	1076	Speed mismatch	“PG-ERR”	d21 to d23
77	1077	Low DC link bus voltage detection	“U-EDC”	E76

FUNCTION
F Codes
E Codes
C Codes
P Codes
H Codes
A Codes
b Codes
r Codes
J Codes
d Codes
U Codes
y Codes
K Codes

Assignment data		Defined function	Signal name	Related function codes/related signals (data)
Active				
ON	OFF			
79	1079	During deceleration in momentary power failure	“IPF2”	-
82	1082	Positioning completed	"PSET"	J73 to J88
84	1084	Maintenance timer counted up	"MNT"	H44, H78, H79
87	1087	Frequency arrival and frequency detected	"FARFDT"	E30, E31, E32
88	1088	Auxiliary motor drive signal *101	"AUX_L"	J465, J466
89	1089	Magnetic pole position detection complete	"PTD"	P30
90	1090	Alarm content 1	“AL1”	-
91	1091	Alarm content 2	“AL2”	
92	1092	Alarm content 4	“AL4”	
93	1093	Alarm content 8	“AL8”	
95	1095	Performing forced operation	"FMRUN"	H116 to H121
98	1098	Warning	“L-ALM”	H81 to H83
99	1099	Alarm output (for any alarm)	"ALM"	-
100	-	No function assigned	"NONE"	o01 to o07, o121 to o128
101	1101	EN terminal detection circuit error	"DECF"	-
102	1102	EN terminal input OFF	"ENOFF"	
105	1105	Braking transistor broken	"DBAL"	H98
111 to 124	1111 to 1124	Customizable logic output signal 1 to 14	“CLO1” to “CLO14”	U code
125	1125	Integral power pulse output	"POUT"	E57
131	1131	Performing speed limiting	"S-LIM"	-
132	1132	Torque limiting	"T-LIM"	F40, F41
133	1133	Low current detection 2	“IDL2”	E34
135	1135	Dancer upper limit position warning signal	“D-UPFL”	d150, d151, J57
136	1136	Dancer lower limit position warning signal	"D-DNFL"	
137	1137	Dancer position limit warning signal	"D-FL"	
151	1151	Overtravel detection	“OT-OUT”	d201 to d299
152	1152	Forced stop detection	“STOP-OUT”	d201 to d299
153	1153	Pass point detection 1	“PPAS1”	d201 to d299
154	1154	Pass point detection 2	“PPAS2”	d201 to d299
158	1158	Performing overload detection	"LLIM"	d186, d187
159	1159	Performing light load automatic double speed operation	"LAC"	d175 to d185
160	1160	Motor 1 being driven with inverter *101	"M1_I"	J401 to J493
161	1161	Motor 1 being driven by commercial power *101	"M1_L"	J401 to J493
162	1162	Motor 2 being driven with inverter *101	"M2_I"	
163	1163	Motor 2 being driven by commercial power *101	"M2_L"	
164	1164	Motor 3 being driven with inverter *101	"M3_I"	
165	1165	Motor 3 being driven by commercial power *101	"M3_L"	
166	1166	Motor 4 being driven with inverter *101	"M4_I"	

Assignment data		Defined function		Signal name	Related function codes/related signals (data)
Active					
ON	OFF				
167	1167	Motor 4 being driven by commercial power	*101	"M4_L"	
169	1169	Motor 5 being driven by commercial power	*101	"M5_L"	
171	1171	Motor 6 being driven by commercial power	*101	"M6_L"	J401 to J493
173	1173	Motor 7 being driven by commercial power	*101	"M7_L"	
175	1175	Motor 8 being driven by commercial power	*101	"M8_L"	
180	1180	In mutual operation	*101	"M-RUN"	J401 to J404
181	1181	Alarm in mutual operation	*101	"M-ALM"	
190	1190	Under scheduled operation	*101	"TMD"	T01 to T70
191	1191	Schedule 1 enabled	*101	"TMD1"	
192	1192	Schedule 2 enabled	*101	"TMD2"	
193	1193	Schedule 3 enabled	*101	"TMD3"	
194	1194	Schedule 4 enabled	*101	"TMD4"	
200	1200	Under PID2 control	*101	"PID2"	J101, J201
201	1201	PID1 alarm	*101	"PV1-ALM"	J121, J122, J124
202	1202	PID1 feedback error	*101	"PV1-OFF"	J127 to J131
203	1203	PID2 alarm	*101	"PV2-ALM"	J221 to J225
204	1204	PID2 feedback error	*101	"PV2-OFF"	J227 to J231
211	1211	Under external PID1 control	*101	"EPID1-CTL"	J601
212	1212	External PID1 output	*101	"EPID1-OUT"	
213	1213	Running under external PID1	*101	"EPID1-RUN"	
214	1214	External PID1 alarm	*101	"EPV1-ALM"	J521, J522, J524
215	1215	External PID1 feedback error	*101	"EPV1-OFF"	J529 to J531
221	1221	Under external PID2 control	*101	"EPID2-CTL"	J601
222	1222	External PID2 output	*101	"EPID2-OUT"	
223	1223	Running under external PID2	*101	"EPID2-RUN"	
224	1224	External PID2 alarm	*101	"EPV2-ALM"	J621, J622, J624
225	1225	External PID2 feedback error	*101	"EPV2-OFF"	J629 to J631
231	1231	Under external PID3 control	*101	"EPID3-CTL"	J651
232	1232	External PID3 output	*101	"EPID3-OUT"	
233	1233	Running under external PID3	*101	"EPID3-RUN"	
234	1234	External PID3 alarm	*101	"EPV3-ALM"	J671, J672, J674
235	1235	External PID3 feedback error	*101	"EPV3-OFF"	J679 to J681
251	1251	M/Shift key ON/OFF status		"MTGL"	

*100: Supported with ROM0300 or later.
*101: Supported with ROM0500 or later.

Note A negative logic (Active OFF) command cannot be assigned to the functions marked with "-" in the "Active OFF" column.

FUNCTION
F Codes
E Codes
C Codes
P Codes
H Codes
A Codes
b Codes
r Codes
J Codes
d Codes
U Codes
y Codes
K Codes

■ **Inverter running “RUN” assignment (Function code data = 0), Inverter outputting “RUN2” assignment (Function code data = 35)**

These output signals tell the external equipment that the inverter is running at a starting frequency or higher. If assigned in negative logic (Active OFF), these signals can be used to tell the “Inverter being stopped” state.

Output signal	Basic function	Remarks
"RUN"	These signals come ON when the inverter is running. Under V/f control: These signals come ON if the inverter output frequency exceeds the starting frequency, and go OFF if it drops below the stop frequency. The “RUN” signal can also be used as a “Speed valid” signal.	Goes OFF during DC braking.
“RUN2”		Comes ON even during DC braking, pre-excitation, zero speed control.

■ **Frequency (speed) arrival “FAR” assignment (Function code data = 1), Frequency (speed) arrival 3 “FAR3” assignment (Function code data = 72)**

These output signals come ON when the difference between the output frequency (detected speed) and reference frequency (reference speed) comes within the frequency arrival hysteresis width specified by E30.
(🕮 Function code E30)

■ **Frequency (speed) detected “FDT” assignment (Function code data = 2), Frequency (speed) detected 2 “FDT2” assignment (Function code data = 31), Frequency (speed) detected 3 “FDT3” assignment (Function code data = 58)**

These output signals FDT, FDT2 or FDT3 come ON when the output frequency (detected speed) exceeds the frequency detection level specified by E31, E36 or E54, respectively, and go OFF when the output frequency (detected speed) drops below the “Frequency detection level (E31, E36 or E54) - Hysteresis width (E32).”
(🕮 Function codes E31, E32)

■ **Undervoltage detected (Inverter stopped) “LU” assignment (Function code data = 3)**

This output signal comes ON when the DC link bus voltage of the inverter drops below the specified undervoltage level. When this signal is ON, the inverter cannot run even if a run command is given. It goes OFF when the voltage exceeds the level. The undervoltage protection function will be triggered, and the motor error stop (trip) status will also turn ON.

■ **Detected torque polarity “B/D” assignment (Function code data = 4)**

The inverter issues the driving or braking polarity signal to this digital output judging from the internally calculated torque or torque command. This signal goes OFF when the detected torque corresponds to driving, and it goes ON when it corresponds to braking.

■ Inverter output limiting "IOL" assignment (Function code data = 5), Inverter output limiting with delay "IOL2" assignment (Function code data = 22)

The output signal IOL comes ON when the inverter is limiting the output frequency by activating any of the following actions (minimum width of the output signal: 100 ms).
The output signal IOL2 comes ON when any of the following output limiting operation continues for 20 ms or more.

- Torque limiting (F40, F41, E16 and E17, Maximum internal value)
- Current limiting by software (F43 and F44)
- Instantaneous overcurrent limiting by hardware (H12 = 1)
- Automatic deceleration (Anti-regenerative control) (H69)
- Overload stop function (J65)

Note When the "IOL" is ON, it may mean that the output frequency may have deviated from the reference frequency because of the limiting functions above.

■ Auto-restarting after momentary power failure "IPF" assignment (Function code data = 6)

This output signal is ON either during continuous running after a momentary power failure or during the period after the inverter detects an undervoltage condition and shuts down the output until restart has been completed (the output has reached the reference frequency).
(📖 Function code F14)

■ Motor overload early warning "OL" assignment (Function code data = 7)

The OL signal is used to detect a symptom of an overload condition (alarm code OL 1 to OL 4) of the motor so that the user can take an appropriate action before the alarm actually happens.
(📖 Function code E34)

■ Performing keypad operation "KP" assignment (Function code data = 8)

An ON signal is output when run commands (RUN, STOP keys) from the keypad are valid.

■ Inverter ready to run "RDY" assignment (Function code data = 10)

This output signal comes ON when the inverter becomes ready to run by completing hardware preparation (such as initial charging of DC link bus capacitors and initialization of the control circuit) and no protective functions are activated. "RDY" OFF conditions are shown in the following table.

"RDY" OFF conditions
Undervoltage (excl. restart after momentary power failure)
Alarm occurring
Terminal [BX] ON (coast to stop status)
Terminal [BATRY] ON (performing battery operation)
OFF across terminal [EN1] and [PLC], or across [EN2] and [PLC]

■ Commercial power supply/inverter operation switching "SW88", "SW52-2", "SW52-1" assignment (Function code data = 11, 12, 13)

A magnetic contactor is controlled with built-in sequences to switch between commercial power supply operation and inverter operation by selecting external command "ISW50" or "ISW60". Refer to the explanation on "ISW50"/"ISW60" for details.
(📖 Function codes E01 to E09 data = 40, 41)

■ **Switch MC on the input power lines "AX" assignment (Function code data = 15)**

In response to a run command FWD, this output signal controls the magnetic contactor on the commercial-power supply side. It comes ON when the inverter receives a run command. It goes OFF after the motor decelerates to stop with a stop command received. This signal immediately goes OFF upon receipt of a free run command or when an alarm occurs.

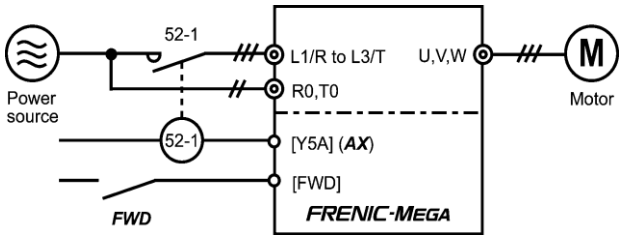

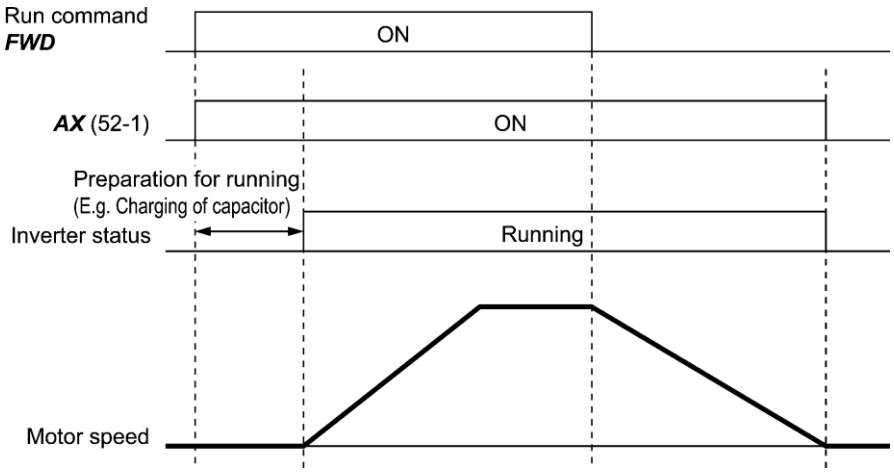

■ **Pattern operation stage transition "TU" assignment (Function code data = 16)**

When transitioning between stages during pattern operation, a 1 shot (100 ms) ON signal is output, indicating that the stage has changed. This signal can be used with customizable logic.

■ **Pattern operation cycle operation complete "TO" assignment (Function code data = 17)**

A 1 shot (100 ms) ON signal is output the moment all stages 1 to 7 are complete during pattern operation. This signal can be used with customizable logic.

■ **Pattern operation stage No. 1 "STG1" assignment (Function code data = 18), Pattern operation stage No. 2 "STG2" assignment (Function code data = 19), Pattern operation stage No. 4 "STG4" assignment (Function code data = 20)**

Outputs the stage (operation process) currently performed during pattern operation.

Operation pattern stage No.	Output terminal signal		
	STG1	STG2	STG4
Stage 1	ON	OFF	OFF
Stage 2	OFF	ON	OFF
Stage 3	ON	ON	OFF
Stage 4	OFF	OFF	ON
Stage 5	ON	OFF	ON
Stage 6	OFF	ON	ON
Stage 7	ON	ON	ON

■ Frequency (speed) arrival 2 “FAR2” assignment (Function code data = 21)

The signals come ON when the difference between the output frequency before torque limiting and reference frequency is within the frequency arrival hysteresis width specified by E30 and the frequency arrival delay specified by E29 has elapsed.
(📖 Function codes E29, E30)

■ Cooling fan in operation “FAN” assignment (Function code data = 25)

With the cooling fan ON/OFF control enabled (H06 = 1), this output signal is ON when the cooling fan is in operation, and OFF when it is stopped. This signal can be used to make the cooling system of peripheral equipment interlocked for an ON/OFF control.
(📖 Function code H06)

■ Auto-resetting “TRY” assignment (Function code data = 26)

This output signal comes ON when auto resetting (resetting alarms automatically) is in progress.
(📖 Function codes H04, H05)

■ Universal DO “U-DO” assignment (Function code data = 27)

Assigning this output signal to an inverter's output terminal and connecting the terminal to a digital input terminal of peripheral equipment, allows an upper controller to send commands to the peripheral equipment via the RS-485 or the fieldbus communications link. The universal DO can be used as an output signal independent of the inverter operation.

📖 For the procedure for access to Universal DO via the RS-485 or fieldbus communications link, refer to the respective instruction manual.

■ Heat sink overheat early warning “OH” assignment (Function code data = 28)

This is used to take appropriate measures when signs of this are detected before an overheating trip (OH 1) occurs.

ON at [(Overheat trip (OH 1) temperature) - 5 °C (9 °F)] or higher
OFF at [(Overheat trip (OH 1) temperature) - 8 °C (14 °F)] or lower

■ Synchronization completed “SY” assignment (Function code data = 29)

This output signal comes ON when the control target comes inside the synchronization completion detection angle in synchronous running.

(📖 Function codes J73 to J88)

■ Lifetime alarm “LIFE” assignment (Function code data = 30)

This output signal comes ON when it is judged that the service life of any one of capacitors (DC link bus capacitors or electrolytic capacitors on the printed circuit boards), cooling fan, or IGBT has expired. This signal should be used as a guide for replacement of the capacitors and cooling fan. If this signal comes ON, use the specified maintenance procedure to check the service life of these parts and determine whether the parts should be replaced or not
(📖 Function code H42)

■ Reference loss detected “REF OFF” assignment (Function code data = 33)

This output signal comes ON when an analog input used as a frequency command source is in a reference loss state (as specified by E65) due to a wire break or a weak connection. This signal goes OFF when the normal operation under the analog input is resumed.
(📖 Function code E65)

■ Overload prevention controlling “OLP” assignment (Function code data = 36)

This output signal comes ON when overload prevention control is activated.
(The minimum ON-duration is 100 ms.)
(📖 Function code H70)

■ Current detection “ID” assignment, Current detection 2 “ID2” assignment, Current detection 3 “ID3” assignment (Function code data = 37, 38, 39)

When the inverter output current exceeds the level specified by E34, E37 or E55 for the period specified by E35, E38 or E56, the ID, ID2 or ID3 signal turns ON, respectively. (The minimum ON-duration is 100 ms.)
(📖 Function code E34)

■ Low current detection “IDL”, “IDL2” assignment (Function code data = 41, 133)

When the inverter output current falls to or below the level specified by E34, E37 or E55 for the period specified by E35, E38 or E56, the IDL or IDL2 signal turns ON, respectively (minimum output signal width: 100 ms). “IDL” turns ON if conditions are established even while the inverter is stopped. “IDL2” turns ON only while the inverter is running.
(📖 Function code E34)

■ PID alarm “PID-ALM” assignment (Function code data = 42)

PID control, and PID control 1 and 2 absolute value warnings and deviation warnings can be output as PID warnings.

■ Under PID control “PID-CTL” assignment (Function code data = 43)

An ON signal is output when PID control, or PID control 1 or 2 are enabled, and the run command is ON.

Note With PID control, or PID control 1 or 2, the inverter may stop due to the slow flowrate stopping function or other reasons. If that happens, the “PID-CTL” signal remains ON. As long as the “PID-CTL” signal is ON, PID control is effective, so the inverter may abruptly resume its operation, depending on the feedback value in PID control.

⚠ WARNING

If the PID function, or PID control 1 or 2 are selected, even if the inverter stops its output during operation because of sensor signals or other reasons, operation will resume automatically. Design your machinery so that safety is ensured even in such cases.

Failure to observe this could result in an accident.

■ Under sleep mode of PID control “PID-STP” assignment (Function code data = 44)

An ON signal is output when the inverter is stopped by the slow flowrate stop function during PID control, or PID control 1 or 2 control.

■ Low torque detected “U-TL” assignment (Function code data = 45)

This output signal comes ON when the torque value calculated by the inverter or torque command drops below the level specified by E80 (Low torque detection (Level)) for the period specified by E81 (Low torque detection (Timer)). (Minimum width of the output signal: 100 ms)
(📖 Function codes E78 to E81)

■ Torque detected 1 “TD1” assignment (Function code data = 46),Torque detected 2 – “TD2” assignment (Function code data = 47)

This output signal TD1 or TD2 comes ON when the torque value calculated by the inverter or torque command exceeds the level specified by E78 or E80 (Torque detection (Level)) for the period specified by E79 or E81 (Torque detection (Timer)), respectively. (Minimum width of the output signal: 100 ms)
(📖 Function codes E78 to E81)

■ Motor 1 to 4 switching “SWM1”, “SWM2”, “SWM3”, “SWM4” assignment (Function code data = 48 to 51)

The output signals turn ON corresponding to the motor selected by the signal “M2” to “M4” the selected function code group.
(📖 Function codes A42, b42, r42)

■ **Running forward – "FRUN" assignment (Function code data = 52) Running reverse – "RRUN" assignment (Function code data = 53)**

Output signal	Assigned data	Running forward	Running reverse	Inverter stopped
"FRUN"	52	ON	OFF	OFF
"RRUN"	53	OFF	ON	OFF

■ **Under remote mode "RMT" assignment (Function code data = 54)**

This output signal comes ON when the inverter switches from local to remote mode.

📖 For details of switching between remote and local modes, refer to Chapter 3 "3.3.8 Switching between local and remote modes".

■ **Run command entered "AX2" assignment (Function code data = 55)**

By assigning run permission "RE" to a digital input, the inverter is not started with run command input alone. After inputting a run command, "AX2" with run command input is output as a signal to indicate that inverter operation preparation is complete. By inputting run command entered "AX2" after inputting a run command, the inverter is started for the first time.

📖 Refer to run permission "RE" for function codes E01 to E09 for details on run permission "RE" and run command entered "AX2".

■ **Motor overheat detected by thermistor "THM" assignment (Function code data = 56)**

When the PTC thermistor on the motor detects an overheat, the inverter turns this signal ON and continues to run, without entering the alarm OH4 state. This feature applies only when H26 data is set to "2."
(📖 Function codes H26, H27)

■ **Brake control "BRKS" assignment (Function code data = 57)**

This signal outputs a brake control command that releases or applies the brake.
(📖 Function codes J68 to J72, d120 to d125)

■ **Terminal [C1] (C1 function) wire break detection "C1OFF" assignment (Function code data = 59)**

This output signal comes ON when the inverter detects that the input current to terminal [C1] (C1 function) drops below 2 mA interpreting it as the terminal [C1] wire broken.

■ **A motor regular switching early warning "MCHG" signal is output. (Function code data = 68) *101**

A switching warning signal for motor periodic switching is output.

(📖 Function code J437)

■ **Pump control output limit signal "MLIM" assignment (Function code data = 69) *101**

If the pump control operation selection is enabled (J401 ≠ 0), all enabled motors are driven. Furthermore, the signal is output when the motor increase judgment is established with the motor increase judgment (judgment frequency) (J450) and (duration) (J451) even when all motors are being driven.With this signal, the system is capable of detecting that the discharge quantity (pressure) isn't rising at such times as when the pump piping is ruptured.

FUNCTION
F Codes
E Codes
C Codes
P Codes
H Codes
A Codes
b Codes
r Codes
J Codes
d Codes
U Codes
y Codes
K Codes

■ Speed valid “DNZS” assignment (Function code data = 70)

This output signal comes ON when the reference speed or detected one exceeds the stop frequency specified by function code F25. It goes OFF when the speed is below the stop frequency for 100 ms or longer.

Under vector control with speed sensor, F38 switches the decision criterion between the reference speed and actual speed. Under vector control without speed sensor, the reference speed is used as a decision criterion.
(🕮 Function codes F25, F38)

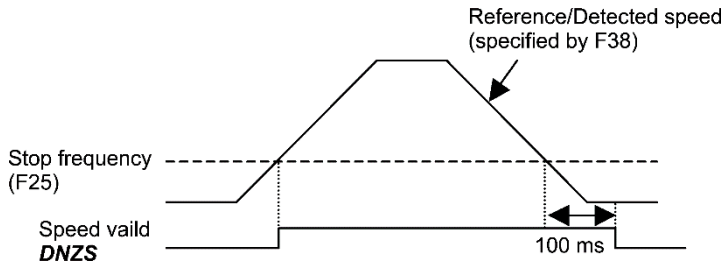

■ Speed agreement “DSAG” assignment (Function code data = 71)

This output signal comes ON when the deviation of the detected speed from the speed command after the acceleration/deceleration processor is within the allowable range specified by d21. It goes OFF when the deviation is beyond the range for longer than the period specified by d22. This feature allows you to check whether the speed controller is working correctly.
(🕮 Function codes d21, d22)

■ PG error detected “PG-ERR” assignment (Function code data = 76)

This output signal comes ON when the inverter detects a PG error with the d23 (PG error processing) data being set to “0: Continue to run,” in which the inverter does not enter the alarm state.
(🕮 Function codes d21 to d23)

■ Low DC link bus voltage detection “U-EDC” assignment (Function code data = 77)

This output signal comes ON when the DC intermediate voltage drops below E76 (DC link bus low-voltage detection level), and it goes OFF when the DC intermediate voltage exceeds E76.
(🕮 Function code E76)

■ During decelerating at momentary power failure “IPF2” assignment (Function code data = 79)

When F14 is 2 or 3, signal turns ON when the intermediate DC voltage will drop to or below the H15 “continue to run level”, and the motor continues to run. The signal turns OFF after power has been restored, and the intermediate DC voltage reaches the “voltage set at H15 + 10 V or more”.

Even when F14 data is set to 4 or 5, the signal comes ON when the DC intermediate voltage drops below the undervoltage level, and it goes OFF when the DC intermediate voltage becomes “at least 10 V higher than the undervoltage level.”

(🕮 Function codes F14, H15)

■ Positioning completed “PSET” assignment (Function code data = 82)

This output signal comes ON as a positioning completion signal. This signal is used when in-position with the position control function, and when settling is complete with servo lock function.

🕮 Refer to function codes J97 to J99 for details on the servo lock function. Refer to d201 to d299 for details on the position control function.

■ Maintenance timer counted up “MNT” assignment (Function code data = 84)

Once the inverter’s cumulative run time or the startup times for the motor 1 exceeds the previously specified count, this output signal comes ON.
(🕮 Function codes H78, H79)

■ Frequency arrival AND frequency detected “FARFDT” assignment (Function code data = 87)

The FARFDT, which is an AND composite signal of FAR and FDT, comes ON when both signal conditions are met. (🕮 Function codes E30 to E32)

■ Auxiliary motor drive signal “AUX_L” assignment (Function code data = 88) *101

An ON signal is output when all motors for which the pump control motor drive permission signal (“MEN1” to “MEN8”) is ON are running, and the frequency of the motors being driven by the inverter reaches the auxiliary motor level (frequency operation level) (J465). Furthermore, the signal turns OFF if the frequency of the motors being driven by the inverter drops below the auxiliary motor level (hysteresis width) (J466).

Auxiliary motor drive signal “AUX_L” turns OFF when the PID operation selection is disabled (J101/J201 = 0), or the pump control operation selection is disabled (J401 = 0).

■ Magnetic pole position detection signal “PTD” assignment (Function code data = 89)

An ON signal is output if the magnetic pole position is detected when a PM motor starts running.

■ Alarm content “AL1”, “AL2”, “AL4”, “AL8” assignment (Function code data = 90, 91, 92, 93)

Outputs the state of operation of the inverter protective functions.

Alarm content (inverter protective function)	Alarm code	Output terminal			
		AL1	AL2	AL4	AL8
Instantaneous overcurrent protection, ground fault protection, fuse blow	OC1 to OC3 EF, FUS	ON	OFF	OFF	OFF
Overvoltage protection	OU1 to OU3	OFF	ON	OFF	OFF
Undervoltage protection, input phase loss	LU, Lin	ON	ON	OFF	OFF
Motor overload, electronic thermal (motors 1 to 4)	OL1 to OL4	OFF	OFF	ON	OFF
Inverter overload	OLU	ON	OFF	ON	OFF
INV overheat protection, inverter internal overheat, charging resistor overheat	OH1, OH3, OH6	OFF	ON	ON	OFF
External alarm, DB resistor overheat, motor overheat	OH2, dbH, OH4	ON	ON	ON	OFF
Memory error, CPU error, undervoltage save error, hardware combination error	Er1, Er3, ErF, ErH	OFF	OFF	OFF	ON
Keypad communication error, option communication error	Er2, Er4	ON	OFF	OFF	ON
Option error	Er5	OFF	ON	OFF	ON
Charging circuit error, operating procedure error, EN circuit error, DB transistor failure detection	P6F, Er6, ECF, dbA	ON	ON	OFF	ON
Tuning error, output phase loss protection	Er7, OPL	OFF	OFF	ON	ON
RS485 communications error	Er8, ErP	ON	OFF	ON	ON
Overspeed protection, PG error, excessive positioning error Speed mismatch (excessive speed deviation), positioning control error	OS, PG, ErE, Ero	OFF	ON	ON	ON
PID feedback wire break, mock alarm Other alarm	CoF, Err	ON	ON	ON	ON

* No terminal outputs a signal during normal operation.

■ Performing forced operation “FMRUN” assignment (Function code data = 95)

An ON signal is output during forced operation. (🕮 Function codes H116 to H121)

■ Warning “L-ALM” assignment (Function code data = 98)

This output signal comes ON when a warning occurs. (🕮 Function codes H81 to H83)

FUNCTION
F Codes
E Codes
C Codes
P Codes
H Codes
A Codes
b Codes
r Codes
J Codes
d Codes
U Codes
y Codes
K Codes

■ Alarm output (for any alarm) “ALM” assignment (Function code data = 99)

This output signal comes ON if any of the protective functions is activated and the inverter enters Alarm mode.

■ No function assigned “NONE” assignment (Function code data = 100)

This output signal is used to disable an OPC-RY2 or OPC-DO option output terminal function.

■ EN circuit failure detected “DECF” assignment (Function code data = 101)

The signal comes ON when any error is detected in the circuit for EN terminal.

■ EN terminal input OFF “ENOFF” assignment (Function code data = 102)

The signal comes ON when the EN terminal is turned OFF.

■ Braking transistor broken “DBAL” assignment (Function code data = 105)

If the inverter detects a breakdown of the braking transistor, it displays the braking transistor alarm (dbA) and also issues the output signal “DBAL”. Detection of the breakdown of a braking transistor can be canceled by H98.
(📖 Function code H98)

Note A breakdown of the braking transistor could lead to a damage of the braking resistor or inverter’s internal units. To prevent the secondary damage, use “DBAL” to cut off power to the magnetic contactor in inverter primary circuits upon detection of a breakdown of the built-in braking transistor.

■ Customizable logic output signal 1 to 14 “CLO1” to “CLO14” assignment (Function code data = 111 to 124)

Outputs the result of customizable logic operation.
(📖 Function code U codes)

■ Power consumption cumulative pulse “POUT” assignment (Function code data = 125)

A 0.15 s pulse is output each time the increase in integral power consumption increases by the unit electric energy selected at function code E57.
(📖 Function code E57)

■ Performing speed limiting “S-LIM” assignment (Function code data = 131)

Under vector control, the speed limiting function is enabled when performing droop control or torque control. This signal turns ON if speed limiting occurs.
(📖 Function codes H18, H28)

■ Performing torque limiting “T-LIM” assignment (Function code data = 132)

This signal turns ON if torque limiting occurs.
(📖 Function code F40)

■ Dancer upper limit position warning signal “D-UPFL” assignment (Function code data = 135)

■ Dancer lower limit position warning signal “D-DNFL” assignment (Function code data = 136)

■ Dancer position limit warning signal “D-FL” assignment (Function code data = 137)

Signals are output when the dancer position reaches the set upper/lower limit warning position when performing speed control (dancer) using PID control. Refer to the explanation on the following reference function code for details.
(📖 Function code J57)

■ Overtravel detection “OT-OUT”, Forced stop detection “STOP-OUT”, Pass point detection 1 “PPAS1”, Pass point detection 2 (PPAS2) assignment (Function code data = 151 to 154)

These signals are for position control. Refer to the explanation on following reference function code for details.
(📖 Function codes d201 to 299)

■ **Overload detection "LLIM" assignment (Function code data = 158)**

This signal is for the overload detection function. Refer to the explanation on following reference function code for details.
(📖 Function code d186)

■ **Performing light load automatic double speed operation "LAC" assignment (Function code data = 159)**

This signal is for the hoist function. Refer to the explanation on following reference function code for details.
(📖 Function codes d170 to d189)

■ **Motor 1 being driven with inverter "M1-I" to "M4-I" assignment (Function code data = 160, 162, 164, 166) *101**

If pump control operation is enabled, an inverter drive signal is output. When using circulation inverter drive (J401 = 2, 12) or circulation inverter drive + other commercial power supply drive (J401 = 3, 13), it is necessary to assign the function for the number of motors driven by the inverter.
(📖 Function code J401)

■ **Motor 1 to 8 being driven by commercial power "M1-L" to "M8-L" assignment (Function code data = 161, 163, 165, 167, 169, 171, 173, 175) *101**

If pump control operation is enabled, a commercial power drive signal is output. When using fixed inverter drive (J401 = 1), circulation inverter drive (J401 = 2, 12), or circulation inverter drive + other commercial power supply drive (J401 = 3, 13), it is necessary to assign the function for the number of motors driven by the commercial power supply.
(📖 Function code J401)

■ **In mutual operation "M-RUN" assignment (Function code data = 180) *101**

An ON signal is output when one or more motors is running during rotary control (J401 = 52, 54).

■ **Alarm in mutual operation "M-ALM" assignment (Function code data = 181) *101**

An ON signal is output if an alarm stoppage has occurred for one or more motors during rotary control (J401 = 52, 54).

■ **Under scheduled operation "TMD" assignment (Function code data = 190) *101**

■ **Schedule 1 to 4 enabled "TMD1" to "TMD4" assignment (Function code data = 191 to 194) *101**

An ON signal is output during all scheduled operation. (📖 Function codes T01 to T19)

Scheduled operation (external output) details	External output signal output status				
	"TMD"	"TMD1"	"TMD2"	"TMD3"	"TMD4"
Scheduled operation disabled (not set or canceled)	OFF	OFF	OFF	OFF	OFF
Scheduled operation time not established	OFF	OFF	OFF	OFF	OFF
Schedule 1	ON	ON	OFF	OFF	OFF
Schedule 2		OFF	ON	OFF	OFF
Schedule 3		OFF	OFF	ON	OFF
Schedule 4		OFF	OFF	OFF	ON
Schedule 1+2		ON	ON	OFF	OFF
Schedule 1+3		ON	OFF	ON	OFF
Schedule 1+4		ON	OFF	OFF	ON
Schedule 2+3		OFF	ON	ON	OFF
Schedule 2+4		OFF	ON	OFF	ON
Schedule 3+4		OFF	OFF	ON	ON
Schedule 1+2+3		ON	ON	ON	OFF
Schedule 1+2+4		ON	ON	OFF	ON
Schedule 1+3+4		ON	OFF	ON	ON
Schedule 2+3+4		OFF	ON	ON	ON
Schedule 1+2+3+4		ON	ON	ON	ON

FUNCTION
F Codes
E Codes
C Codes
P Codes
H Codes
A Codes
b Codes
r Codes
J Codes
d Codes
U Codes
y Codes
K Codes

■ **Under PID2 control “PID2” assignment (Function code data = 200) *101**

An ON signal is output when PID control 2 is selected.

■ **PID1 alarm “PV1-ALM” assignment (Function code data = 201) *101**

An ON signal is output when a PID1 alarm occurs.
(📖 Function codes J121, J122, J124)

■ **PID1 feedback error “PV1-OFF” assignment (Function code data = 202) *101**

An ON signal is output when a PID control 1 feedback (PV) level error occurs.
(📖 Function codes J127 to J131)

■ **PID2 alarm “PV2-ALM” assignment (Function code data = 203) *101**

An ON signal is output when a PID2 alarm occurs. (📖 Function codes J221 to J225)

■ **PID2 feedback error “PV2-OFF” assignment (Function code data = 204) *101**

An ON signal is output when a PID control 2 feedback (PV) level error occurs.
(📖 Function codes J227 to J231)

■ **Under external PID1 to 3 control “EPID1-CTL”,“EPID2-CTL”,“EPID3-CTL” assignment (Function code data = 211, 221, 231) *101**

An ON signal is output when external PID control 1 to 3 is selected.

(📖 Function codes J501, J601, J651)

■ **External PID1 to 3 output“EPID1-OUT”，“EPID2-OUT”，“EPID3-OUT” assignment (Function code data = 212, 222, 232) *101**

External PID control 1 to 3 is output with a digital signal. The signal turns ON and OFF based on the ratio between the set output cycle and external PID output.
(📖 Function codes J517, J617, J667)

■ **Running under external PID1 to 3“EPID1-RUN”，“EPID2-RUN”，“EPID3-RUN” assignment (Function code data = 213, 223, 233)**

An ON signal is output when external PID control 1 to 3 is running.
(📖 Function codes J501, J601, J651)

■ **External PID1 to 3 alarm“EPV1-ALM”，“EPV2-ALM”，“EPV3-ALM” assignment (Function code data = 214，224，234) *101**

An ON signal is output if an external PID1 to 3 alarm is issued when external PID control 1 to 3 is selected.
(📖 Function codes J521, J522, J524, J621, J622, J624, J671, J672, J674)

■ **External PID1 to 3 feedback error“EPV1-OFF”，“EPV2-OFF”，“EPV3-OFF” assignment (Function code data = 215, 225, 235) *101**

An ON signal is output if a feedback (PV) level error occurs when external PID control 1 to 3 is selected.
(📖 Function codes J529 to J531, J629 to J631, J679 to J681)

■ M/Shift key ON/OFF status “MTGL” assignment (Function code data = 251)

Indicates the ON/OFF status of the M/Shift key function assigned with function code E70.

*100: Supported with ROM0300 or later.
*101: Supported with ROM0500 or later.

■ M/Shift key ON/OFF status “MTGL” assignment (Function code data = 251)

Indicates the ON/OFF status of the M/Shift key function assigned with function code E70.

E29 E30	Frequency arrival delay timer (FAR2) Frequency arrival detection width (Detection width)

E30 specifies the detection level for the Frequency (speed) arrival signal “FAR”, Frequency (speed) arrival signal 2 “FAR2” and the Frequency (speed) arrival signal 3 “FAR3”.

Output signal	E20 to E24, E27 assignment data	Operating condition 1	Operating condition 2
"FAR"	1	The signals come ON when the difference between the output frequency (estimated/actual speed) and the reference frequency (reference speed) comes within the frequency arrival width specified by E30.	FAR always goes OFF when the run command is OFF or the reference speed is “0.”
“FAR3”	72		When the run command is OFF, the inverter regards the reference speed as “0,” so FAR3 comes ON as long as the output frequency (estimated/ actual speed) is within the range of “0 ± the frequency arrival width specified by E30.”
“FAR2”	21	The signal comes ON when the difference between the output frequency (before torque and current limiting) and the reference frequency (reference speed) comes within the frequency arrival width specified by E30.	This signal always goes OFF when the run command is OFF or the reference speed is “0.” The delay can be specified by E29.
"FARFDT"	87	“FAR” and “FDT” AND signals An ON signal is output if both are ON.	

- Data setting range: E30: 0.0 to 10.0 (Hz), E29: 0.01 to 10.00 (s)

The operation timings of each signal are as shown below.

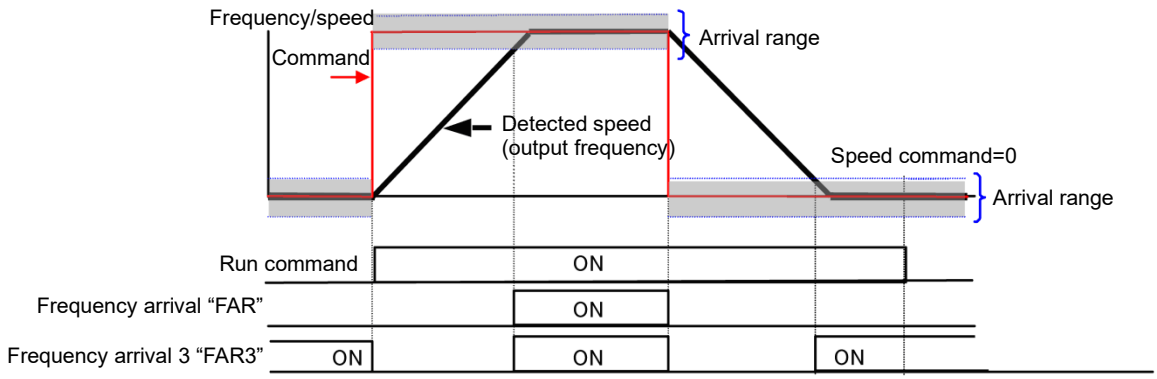

FUNCTION
F Codes
E Codes
C Codes
P Codes
H Codes
A Codes
b Codes
r Codes
J Codes
d Codes
U Codes
y Codes
K Codes

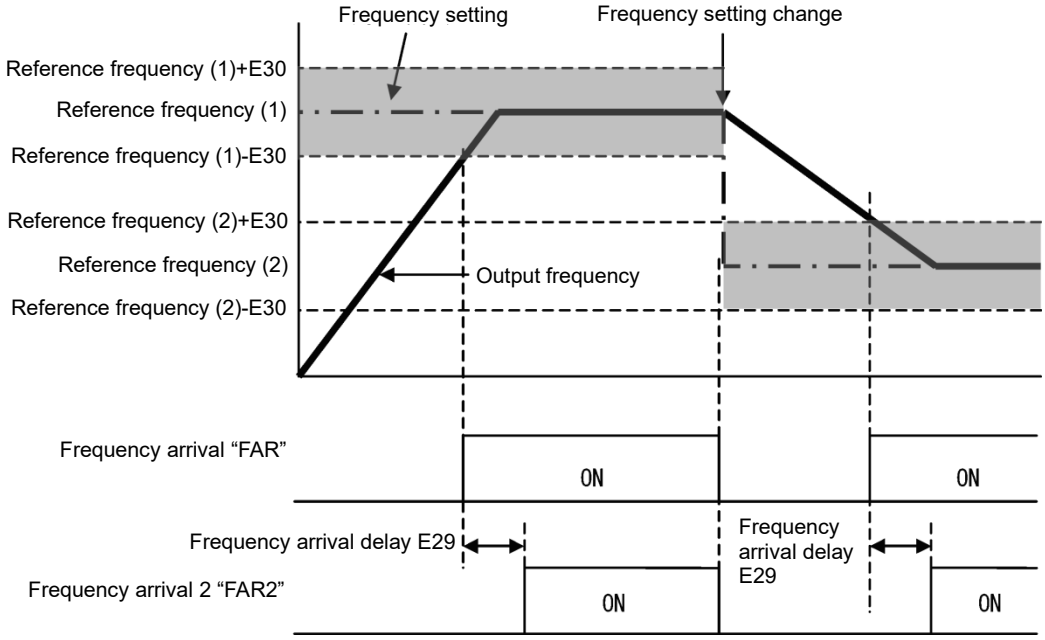
Frequency setting
Frequency setting change
Reference frequency (1)+E30
Reference frequency (1)
Reference frequency (1)-E30
Reference frequency (2)+E30
Reference frequency (2)
Reference frequency (2)-E30
Output frequency
Frequency arrival "FAR"
ON
ON
Frequency arrival delay E29
Frequency arrival delay E29
Frequency arrival 2 "FAR2"
ON
ON

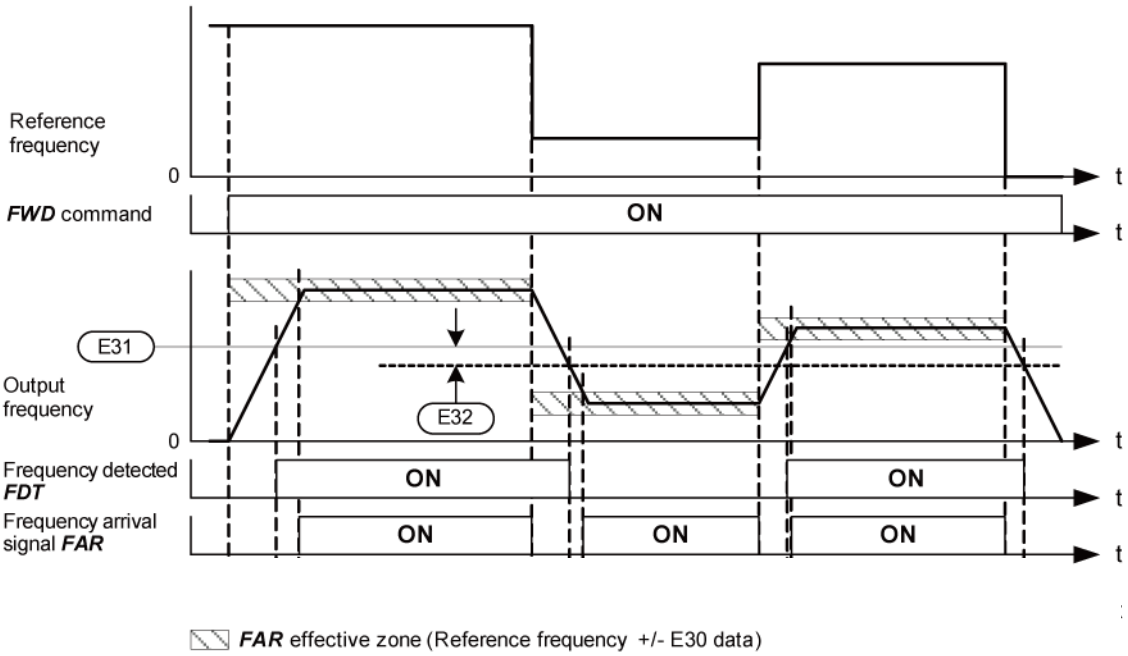
Reference frequency
0
t
FWD command
ON
t
E31
Output frequency
E32
0
t
Frequency detected FDT
ON
ON
t
Frequency arrival signal FAR
ON
ON
ON
t
FAR effective zone (Reference frequency +/- E30 data)

E31, E32	**Frequency detection (level and hysteresis width)** **Related function codes: E36 (Frequency detection 2, level), E54 (Frequency detection 3, level)**

When the output frequency exceeds the frequency detection level specified by E31, the “Frequency (speed) detection signal” comes ON; when it drops below the “Frequency detection level minus Hysteresis width specified by E32,” it goes OFF.

The following three settings are available.

Name	Output signal	E20 to E24, E27 assignment data	Detection level	Hysteresis width
			Range: 0.0 to 599.0 Hz	Range: 0.0 to 599.0 Hz
Frequency detection	“FDT2	2	E31	E32
Frequency detection 2	“FDT2”	31	E36	
Frequency detection 3	“FDT3”	58	E54	
Frequency arrival and frequency detected	"FARFDT"	87	“FAR” and “FDT” AND signal	

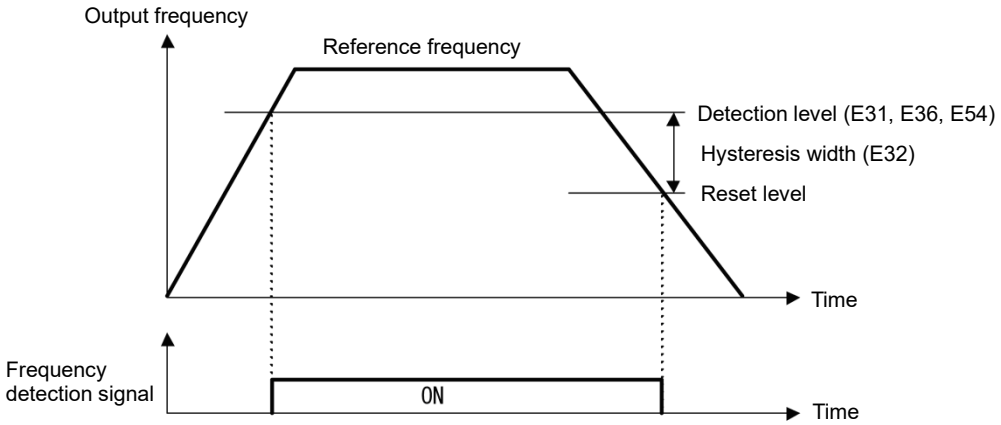

E34, E35	**Overload early warning/Current detection (level and timer)** **Related function codes:** **E37, E38 (Current detection 2/Low current detection level and timer)** **E55, E56 (Current detection 3, level and timer)**

These function codes define the detection level and time for the Motor overload early warning “OL”, Current detection “ID”, Current detection 2 “ID2”, Current detection 3 “ID3”, Low current detection “IDL”, and Low current detection 2 “IDL2” output signals.

Output signal	E20 to E24, E27 assignment data	Detection level	Timer	Motor characteristics	Thermal time constant
		Range: See below	Range: 0.01 to 600.00s	Range: See below	Range: 0.5 to 75.0 min
"OL"	7	E34	-	F10	F12
"ID"	37	E34	E35	-	-
“ID2”	38	E37	E38		
“ID3”	39	E55	E56		
"IDL"	41	E37	E38		
“IDL2”	133	E37	E38		

- Data setting range

  Operation level: 0.00 A (disable), current value of 1 to 200% of inverter rated current set in A (ampere) units

  Motor characteristics 1: Enable (For a general-purpose motor with shaft-driven cooling fan)

  2: Enable (For an inverter-driven motor, non-ventilated motor, or motor with separately powered cooling fan)

■ Motor overload early warning signal – “OL”

The OL signal is used to detect a symptom of an overload condition (alarm code OL 1) of the motor so that the user can take an appropriate action before the alarm actually happens. The OL signal turns ON when the inverter output current exceeds the level specified by E34. In typical cases, set E34 data to 80 to 90 % against F11 data (Electronic thermal overload protection for motor 1, Overload detection level). Set the temperature characteristics of the motor with electronic thermal (motor characteristics selection, thermal time constant).

■ Current detected, Current detected 2 and Current detected 3 – “ID”, “ID2” and “ID3”

When the inverter output current exceeds the level specified by E34, E37 or E55 for the period specified by E35, E38 or E56, the ID, ID2 or ID3 signal turns ON, respectively. When the output current drops below 90 % of the specified detection level, the ID, ID2 or ID3 turns OFF. (The minimum ON-duration is 100 ms.)

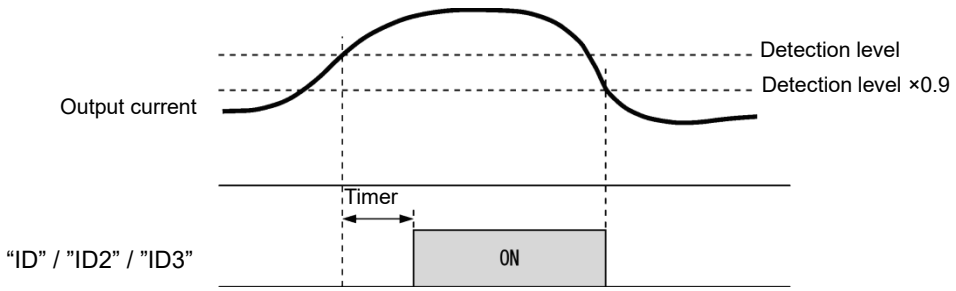

■ **Low current detection "IDL", Low current detection 2 "IDL2"**

This signal turns ON when the output current drops below the level specified by E37 (Low current detection, Level) for the period specified by E38 (Timer). When the output current exceeds the "Low current detection level plus +5 % of the inverter rated current," it goes OFF (minimum output signal width: 100 ms). "IDL" is output even when the inverter is stopped. "IDL2" is valid only during inverter output ("RUN" ON).

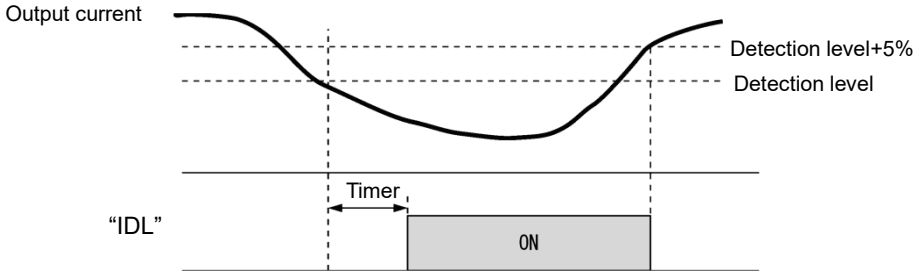

Fig. 5.3-22

The inverter rated current changes based on the F80: Operation mode (HHD/HND switching) setting value.
Refer to Chapter 12 "SPECIFICATIONS" for rated current values.

E36	Frequency detection 2 (Refer to E31)

Refer to the description of E31.

E37, E38	Current detection 2/Low current detection (level and timer) (Refer to E34)

For details about Current detection 2/Low current detection (level) (timer), refer to the description of E34.

E39	Display coefficient for transport time Related function code: E50 (Display coefficient for speed monitor)

E39 specifies the constant-rate feeding time, load shaft speed, coefficient for line speed setting, and coefficient for output status monitor indication.

- Data setting range: 0.000 to 9.999

Calculation formula (when motor 1 selected)

$$\text{Constant feeding rate time (min)} = \frac{\text{Display coefficient for transport time (E50)}}{\text{Frequency x constant rate of feeding coefficient (E39)}}$$

$$\text{(Load speed, line speed)} = \text{(Output frequency 1)} \times \frac{E50}{E39}$$

The "Frequency" in the above formula is set frequency when each indication is the setting value (constant-rate feeding time setting, load shaft speed setting, and line speed setting), whereas it is output frequency before slip compensation when the indication is output status monitor.

When the constant-rate feeding time is 999.9 (min) or greater, or the denominator on the above formula is 0, "999.9" is displayed.

E50 is the speed display coefficient applied when motor 1 is selected. A60, b60, r60, respectively, are applied when motor 2, 3, or 4 is selected.

FUNCTION
F Codes
E Codes
C Codes
P Codes
H Codes
A Codes
b Codes
r Codes
J Codes
d Codes
U Codes
y Codes
K Codes

E42	LED display filter

E42 specifies a filter time constant to be applied for displaying the output frequency, output current and other running status monitored on the LED monitor on the keypad. If the display varies unstably so as to be hard to read due to load fluctuation or other causes, increase this filter time constant.

- Data setting range: 0.0 to 5.0 (s)

If the speed monitor (E43 = 0) is set for the LED monitor display selection, the E42 setting value becomes valid based on the speed monitor selection (E48) as shown in the following table.

E48 (LED monitor display selection) setting value	LED monitor detailed items	E42 (display filter)
0	Output frequency 1 (before slip compensation)	-
1	Output frequency 2 (after slip compensation)	Enable
2	Reference frequency	-
3	Motor rotation speed	Enable
4	Load rotation speed	Enable
5	Feed speed (line speed)	Enable
6	Constant feeding rate time	-
7	Speed (%)	Enable
8	Line speed set value	-
9	Line speed output value	Enable

E43	LED monitor (Item selection) Related function code: E48 LED monitor (speed monitor item)

Selects the operating state monitor information displayed on the keypad LED.

Specifying the speed monitor with E43 provides a choice of speed-monitoring formats selectable with E48 (LED monitor).

Monitor item		Monitor example	LED indication	Unit	Meaning of displayed value	E43 data
Speed monitor		Function code E48 specifies what to be displayed on the LED monitor and LED indicators.				0
	Output frequency 1	50.00	●Hz○A○kW	Hz	Output frequency (before slip compensation) (Hz)	(E48 = 0)
	Output frequency 2	50.00	●Hz○A○kW	Hz	Output frequency (after slip compensation) (Hz)	(E48 = 1)
	Reference frequency	50.00	●Hz○A○kW	Hz	Reference frequency (Hz)	(E48 = 2)
	Motor rotation speed	1500	●Hz●A○kW	min^{-1}	Output frequency (Hz) x 120/P01	(E48 = 3)
	Load rotation speed	300.0	●Hz●A○kW	min^{-1}	Output frequency (Hz) x E50/E39 Note	(E48 = 4)
	Feed speed (Line speed)	300.0	○Hz●A●kW	m/min	Output frequency (Hz) x E50/E39 Note	(E48 = 5)
	Transport time for specified length	50.00	○Hz○A○kW	min	E50 Note/(Output frequency x E39)	(E48 = 6)
	Speed (%)	50.0	○Hz○A○kW	%	(Output frequency / Maximum output frequency) x 100	(E48 = 7)
	Line speed set value	1800.	○Hz○A○kW	m/min	Line speed setting value after calculating acceleration/deceleration with d168 and d169 for feed speed set with E48 = 5	(E48 = 8)
	Line speed output value	1800.	○Hz○A○kW	m/min	Roll frequency setting value compensated with winding diameter calculation result for line speed set with E48 = 8	(E48 = 9)

Monitor item	Monitor example	LED indication	Unit	Meaning of displayed value	E43 data
Output current	12.34	○Hz●A○kW	A	Current output from the inverter in RMS	3
Output voltage	200U	○Hz○A○kW	V	Output voltage (RMS) of the inverter	4
Calculated torque	50	○Hz○A○kW	%	Motor output torque in % (Calculated value)	8
Power consumption	10.25	○Hz○A●kW	kW	Input power to the inverter	9
PID process command	10.00.	○Hz○A○kW	-	PID command and its feedback converted into physical quantities of the object to be controlled (e.g. temperature)	10
PID feedback value	9.00.	○Hz○A○kW	-		12
Timer value	100	○Hz○A○kW	s	Timer value (remaining run time)	13
PID output	100.0.	○Hz○A○kW	%	PID output indicated with percentage (%) with maximum output frequency being 100%	14
Load factor	50L	○Hz○A○kW	%	Load factor of motor indicated with percentage (%) with rated output being 100%	15
Motor output	9.85	○Hz○A●kW	kW	Motor output (kW)	16
Analog signal input monitor	82.00	○Hz○A○kW	-	An analog input to the inverter in a format suitable for a desired scale. Refer to the following function codes. Terminal [12]: C59, C60 Terminal [C1] (C1 function): C65, C66 Terminal [C1] (V3 function): C85, C86	17
Current position	1234	○Hz○A○kW	-	Current position pulse	21
Positioning deviation	2345	○Hz○A○kW	-	Command current position and feedback current position deviation indicated with user value	22
Torque current	48	○Hz○A○kW	%	Torque current command value or calculated torque current	23
Flux command value	50	○Hz○A○kW	%	Magnetic flux command value (Available only under vector control)	24
Integral power consumption	100.0	○Hz○A○kW	kWh	Input watt-hour (kWh) / 100	25
Winding diameter	1234	○Hz○A○kW	mm	Winding diameter calculation result display for constant surface speed control	26
Position control start position	1234	○Hz○A○kW	-	Position when run command turns ON or “POS-SET” command turns ON indicated with user value	27
Stop target position	2345	○Hz○A○kW	-	Stop target position indicated with user value	28
PID deviation	1.00.	○Hz○A○kW	-	PID command value and PID feedback value deviation converted into physical quantities of the object to be controlled	29
Torque bias	25	○Hz○A○kW	%	Torque bias value display	30
Estimated inertia acceleration/ deceleration time conversion value *101	1.234	○Hz○A○kW	s	Display of estimated inertia result in logic acceleration/deceleration time See function code P24.	31
Customizable logic output	82.00	○Hz○A○kW	-	Display of output content for specific customizable logic step See function codes U98, U99.	32
PID command (final) in physical quantity	10.00.	○Hz○A○kW	J105, J205	Displays the finally selected PID command value and PID feedback value converted into physical quantities of the object to be controlled.	50 *101
PID feedback amount (final) in physical quantity	9.00.	○Hz○A○kW			51 *101

FUNCTION
F Codes
E Codes
C Codes
P Codes
H Codes
A Codes
b Codes
r Codes
J Codes
d Codes
U Codes
y Codes
K Codes

Monitor item	Monitor example	LED indication	Unit	Meaning of displayed value	E43 data
PID output	100.0.	○Hz○A○kW	%	Displays PID output as a percentage, with the maximum output frequency being 100%.	52 *101
PID control 1 command in physical quantity	10.00.	○Hz○A○kW	J105	Displays the PID control 1 PID command value and PID feedback value converted into physical quantities of the object to be controlled.	53 *101
PID control 1 feedback amount in physical quantity	9.00.	○Hz○A○kW			54 *101
PID control 2 command in physical quantity	10.00.	○Hz○A○kW	J205	Displays the PID control 2 PID command value and PID feedback value converted into physical quantities of the object to be controlled.	55 *101
PID control 2 feedback amount in physical quantity	9.00.	○Hz○A○kW			56 *101
External PID control 1 command (final) in physical quantity	10.00.	○Hz○A○kW	J505, J605	Displays the finally selected external PID command value and PID feedback value converted into physical quantities of the object to be controlled.	60 *101
External PID control 1 feedback amount (final) in physical quantity	9.00.	○Hz○A○kW			61 *101
External PID control 1 output in %	100.0.	○Hz○A○kW	%	Displays the external PID1 output as a percentage. (Analog output and digital output are possible. See function codes F31, J517.)	62 *101
External PID control 1 manual command in %	100.0.	○Hz○A○kW	%	Displays the external PID1 manual command values as a percentage.	63 *101
External PID control 1 command in physical quantity	10.00.	○Hz○A○kW	J505	Displays the external PID1 PID command value and PID feedback value converted into physical quantities of the object to be controlled.	64 *101
External PID control 1 feedback amount in physical quantity	9.00.	○Hz○A○kW			65 *101
External PID control 2 command in physical quantity	10.00.	○Hz○A○kW	J605	Displays the external PID2 PID command value and PID feedback value converted into physical quantities of the object to be controlled.	70 *101
External PID control 2 feedback amount in physical quantity	9.00.	○Hz○A○kW			71 *101
External PID control 2 output in %	100.0.	○Hz○A○kW	%	Displays the external PID2 output as a percentage. (Analog output and digital output are possible. See function codes F31, J617.)	72 *101
External PID control 2 manual command in %	100.0.	○Hz○A○kW	%	Displays the external PID2 manual command values as a percentage.	73 *101
External PID control 3 command in physical quantity	10.00.	○Hz○A○kW	J655	Displays the external PID3 PID command value and PID feedback value converted into physical quantities of the object to be controlled.	80 *101
External PID control 3 feedback amount in physical quantity	9.00.	○Hz○A○kW			81 *101
External PID control 3 output in %	100.0.	○Hz○A○kW	%	Displays the external PID3 output as a percentage. (Analog output and digital output are possible. See function codes F31, J667.)	82 *101
External PID control 3 manual command in %	100.0.	○Hz○A○kW	%	Displays the external PID3 manual command values as a percentage.	83 *101

● ON, ○ OFF

Note: The function code applied when the motor changes will also change.

*101: Supported with ROM0500 or later.

E44	LED monitor (display when stopped)

Selects monitor information displayed with the keypad LEDs while the inverter is stopped. If E44 = 0, the set frequency is displayed, and when E44 = 1, the output frequency is displayed. The display format is that selected with Speed monitor E48.

E48 data	Monitored item	Inverter stopped	
		E44 = 0 Specified value	E44 = 1 Output value
0	Output frequency 1 (before slip compensation)	Reference frequency	Output frequency 1 (before slip compensation)
1	Output frequency 2 (after slip compensation)	Reference frequency	Output frequency 2 (after slip compensation)
2	Reference frequency	Reference frequency	Reference frequency
3	Motor rotation speed	Reference motor rotation speed	Motor rotation speed
4	Load rotation speed	Reference load rotation speed	Load shaft speed
5	Feed speed	Reference Feed speed (line speed)	Feed speed (line speed)
6	Transport time for specified length	Transport time for specified length setting	Constant feeding rate time
7	Speed (%)	Reference display speed	Display Speed
8	Line speed set value		
9	Line speed output value		

E48	LED monitor (speed monitor item) (Refer to E43)

For details about LED Monitor (Speed monitor item), refer to the description of E43.

E49	Torque Command Monitor (Polarity selection)

The polarity of calculated torque value in v/f control or the torque command value in vector control is normally + for driving and – for braking. However in the case of hoisting load, when the motor rotation direction changes from forward direction to reverse direction, the torque polarity also changes from driving to braking. If it monitors the torque data by FRENIC-Loader4, we cannot take the expected data around zero speed because the polarity changes. If E49 is set to 0, the torque monitor data becomes + for forward/driving and reverse/braking, - for forward/braking and reverse/driving. Therefore we can monitor the continuous torque data around zero speed.

E49 data	Torque monitor polarity
0	Torque polarity (+ for forward/driving and reverse/braking, - for forward/braking and reverse/driving)
1	Plus for driving, Minus for braking

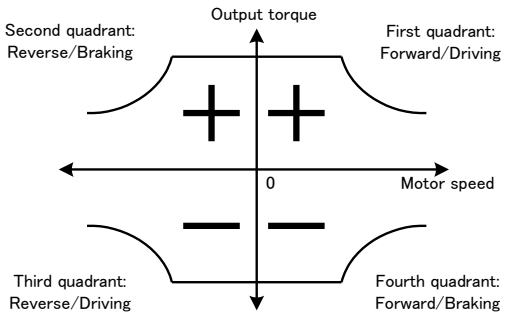

E49=0；Torque polarity

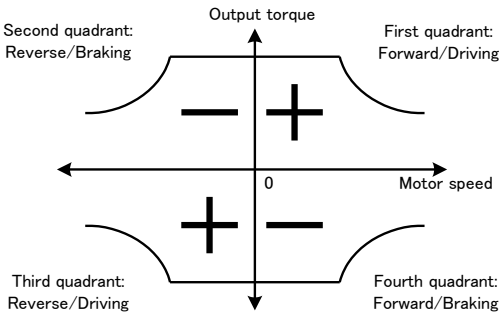

E49=1：+ for driving, - for braking

Related data is the following. These data are displayed and submitted with polarity. Judge the meaning of the polarity by E49 setting.

Torque data	LED	Related data
Keypad LED monitor	E43 = 8	Calculated motor output torque
	E43 = 23	Torque current
Keypad operation monitor	3_04	Calculated motor output torque
Keypad alarm Information	6_03	Calculated torque when alarm occurs (latest up to previous 3 alarms)
Analog output [FM1]	F31 = 4, 22	Output torque, torque current command (F29 = 4: Bipolar only)
Analog output [FM2]	F61 = 4, 22	Output torque, torque current command (F32 = 4: Bipolar only)
OPC-AIO (Option card)	o90 = 4	Output torque (only o93=0: Bipolar)
Torque monitor function code	M02	Torque command (final command value)
	M03	Torque current command (final command value)
	M07	Output torque
	M08	Torque current
	M28	Torque command when alarm occurs (final command value)
	M29	Torque current command when alarm occurs (final command value)
	M33	Output torque when alarm occurs
	M34	Torque current when alarm occurs
	W07	Actual torque value
	W24	Torque current
	X23	Latest information when alarm occurs (torque calculation value)
	X63	Previous information when alarm occurs (torque calculation value)
	Z03	Information from 2 times ago when alarm occurs (torque calculation value)
	Z53	Information from 3 times ago when alarm occurs (torque calculation value)
	Z81	Output torque

FUNCTION
F Codes
E Codes
C Codes
P Codes
H Codes
A Codes
b Codes
r Codes
J Codes
d Codes
U Codes
y Codes
K Codes

E50 A60, b60, r60	Speed display coefficient Speed display coefficient 2, 3, 4

E50 specifies the coefficient that is used when the load shaft speed or line speed is displayed on the LED monitor. (Refer to the description of E43.)

By selecting a motor, the applied speed display coefficient changes.

If motor 1 is selected:

Load shaft speed [min-1] = (E50: Display coefficient for speed monitor) x (Output frequency Hz)

Line speed [m/min] = (E50: Display coefficient for speed monitor) x (Output frequency Hz)

- Data setting range: 0.01 to 200.00

Selected motor	Applied speed display coefficient	Remarks
Motor 1	E50	
Motor 2	A60	
Motor 3	b60	
Motor 4	r60	

E51	Display coefficient for “Input watt-hour data”

E51 specifies a display coefficient (multiplication factor) for displaying the input watt-hour data (5_ 10) in a part of maintenance information on the keypad.

Integral power data = Display coefficient (E51 data) x Integral power consumption (kWh)

- Data setting range: 0.000 (cancel/reset) 0.001 to 9999

Note By setting E51 = 0.000, integral power consumption and integral power data can be cleared to zero. Setting E51 data to 0.000 clears the input watt-hour and its data to “0.” After clearing, be sure to restore E51 data to the previous value; otherwise, input watt-hour data will not be accumulated.

E52	Keypad menu selection

E52 provides a choice of three menu display modes for the standard keypad as listed below.

E52 data	Menu display mode	Menus to be displayed
0	Function code data editing mode	Menus #0, #1 and #7
1	Function code data check mode	Menus #2 and #7
2	Full-menu mode	Menus #0 through #7

Selects the menus displayed on the standard keypad. There are eight menus as shown in the table below.

Menu #	LED monitor indication	Function	Displayed content
0	0.FnC	Favorites	Favorite function code
1	1.F_ _	Data setting F to K	F to K group function code
2	2.rEP	“Data Checking”	Modified function code
3	3.oPE	Run monitor	Operation status indication
4	4.i_o	I/O check	DIO, AIO status indication
5	5.CHE	Maintenance	Maintenance information indication
6	6.AL	Alarm Information	Alarm information indication
7	7.CPY	Data copy	Copy function (option keypad only)
8	8.dES	Destination setting	Sets the region (overseas) in which the product is used.
9	9.S_ _ 9.Addr 9.dAtA	Communication monitor	Codes communicated back and forth between the host device can be monitored, and communication commands can be entered. Refer to the RS-485 Communication User's Manual for details.

For details on the content of each menu item, refer to Chapter 3 “OPERATION USING THE KEYPAD”.

E54	Frequency detection 3 (level) (Refer to E31)

For details, refer to the description of E31.

E55, E56	Current detection 3 (level and timer) (Refer to E34)

For details, refer to the description of E34.

FUNCTION
F Codes
E Codes
C Codes
P Codes
H Codes
A Codes
b Codes
r Codes
J Codes
d Codes
U Codes
y Codes
K Codes

E57	Electric energy pulse output unit setting

By setting “POUT” integral power consumption pulse output to the digital output terminals with E20 to E24, or E27, a 0.15 s pulse can be output each time the integral power consumption increase reaches the unit amount selected with this function code. Accuracy is not so good, and therefore this cannot be used as data for making business deals.

E57 data	Integral power consumption pulse output unit amount
0	0.1 kWh
1	1 kWh
2	10 kWh
3	100 kWh
4	1000 kWh

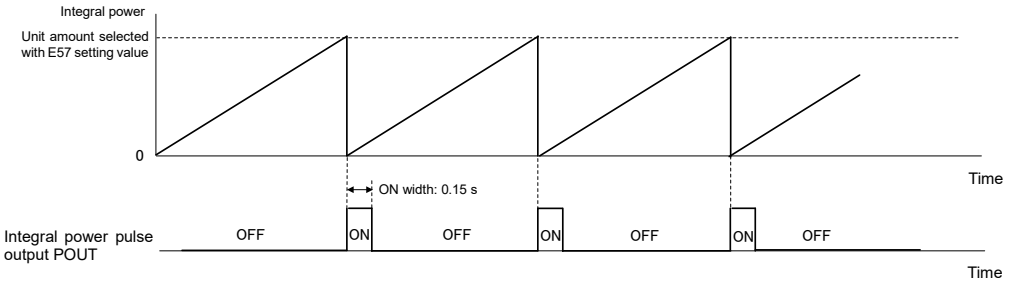

(📖 Function codes E20, E24 and E27, data = 126)

E61 to E63, E66	Terminal [12], [C1] (C1 function), [V2], [C1] (V3 function) (extension function selection)

If other than a frequency setting signal is assigned to analog input terminals, change this function code. The same function cannot be set for another terminal.

E61, E62, E63, E66 data	Function	Description
0	None	-
1	Auxiliary frequency setting 1	Auxiliary frequency input to be added to the reference frequency given by frequency setting 1 (F01). Will not be added to any other reference frequency given by frequency setting 2 and multistep frequency commands, etc. 100 %/full scale. Effective range: -100% to 100%
2	Auxiliary frequency setting 2	Auxiliary frequency input to be added to all frequency commands. Will be added to frequency command 1, frequency command 2, multistep frequency commands, etc. 100 %/full scale. Effective range: -100% to 100%
3	PID command 1	Inputs command sources such as temperature and pressure under PID control 1/2. You also need to set function code J02/J102/J202. 100 %/full scale. Effective range: -100% to 100%

E61, E62, E63, E66 data	Function	Description
4 *101	PID command 2	Inputs commands such as temperature and pressure for PID control 2. It is necessary to set function code J202. 100%/full scale Effective range: -100% to 100%
5	PID feedback value1	Inputs feedback values such as temperature and pressure under PID control 1. 100 %/full scale. Effective range: -110% to 110%
6	Ratio setting	Multiplies the final frequency command value by this value, for use in the constant line speed control by calculating the winder diameter or in ratio operation with multiple inverters. 100 %/full scale. Effective range: -200% to 200%
7	Analog torque limiter A	Used when analog inputs are used as torque limiters. (🕮 Function code F40) 200 %/full scale. Effective range: -300 % to 300 %
8	Analog torque limiter B	Used when analog inputs are used as torque limiters. (🕮 Function code F40) 200 %/full scale. Effective range: -300 % to 300 %
9	Torque bias	Used when analog inputs are used as torque bias. (🕮 Function code H154) 200 %/full scale. Effective range: -300 % to 300 %
10	Torque command	Analog inputs to be used as torque commands under torque control. (🕮 Function code H18) Effective range: -300 % to 300 %
11	Torque current command	Analog inputs to be used as torque current commands under torque control. (🕮 Function code H18) 100 %/full scale. Effective range: -300% to 300%
12	Acceleration/deceleration time ratio setting	Multiplies the ratio based on the analog input amount by the acceleration/deceleration time. (🕮 Function code F07) Effective range: -300% to 300%
13	Upper limit frequency	The frequency obtained by multiplying the maximum output frequency by the analog input amount is used as the upper limit frequency. (🕮 Function code F15) Effective range: 0% to 100%
14	Lower limit frequency	The frequency obtained by multiplying the maximum output frequency by the analog input amount is used as the lower limit frequency. (🕮 Function code F15) Effective range: 0% to 100%
15	Auxiliary frequency setting 3	This is added immediately after adding auxiliary frequency setting 1. 100%/full scale (see block diagram) Effective range: -100% to 100%
16	Auxiliary frequency setting 4	This is added immediately after adding auxiliary frequency setting 2. 100%/full scale (see block diagram) Effective range: -100% to 100%

FUNCTION
F Codes
E Codes
C Codes
P Codes
H Codes
A Codes
b Codes
r Codes
J Codes
d Codes
U Codes
y Codes
K Codes

E61, E62, E63, E66 data	Function	Description
17	Speed limit for forward rotation	The motor speed limit value can be set with terminal [12] and terminal [C1] (C1/V3 functions) under torque control. To limit the motor speed to the maximum output frequency, set the analog input (maximum input) to the maximum value. If using this function, it is recommended that it be used in combination with d35 (overspeed detection level). Note: Function codes C31 to C45 (analog input adjustment) are applied to these analog inputs. Effective range: 0% to 100%
18	Speed limit for reverse rotation	
19 *101	For adjustment by manufacturer	This is for adjustment by the manufacturer. Do not specify a setting for this value.
20	Analog signal input monitor	By inputting analog signals from various sensors such as the temperature sensors in air conditioners to the inverter, you can monitor the state of external devices via the communications link. By using an appropriate display coefficient, you can also have various values to be converted into physical quantities such as temperature and pressure before they are displayed. 100%/full scale.
30 *101	PID feedback value 2	Inputs feedback values such as temperature and pressure for PID control 2. 100%/full scale Effective range: -110% to 110%
31 *101	Auxiliary input 1 to PID process command	This is an auxiliary input added to PID control 1 process commands. It is not added to process commands with PID control 2 or PID multistep commands.
32 *101	Auxiliary input 2 to PID process command	This is an auxiliary input added to PID control 1 and 2 process commands. It is also added to PID multistep commands.
33 *101	Flowrate sensor	Inputs flow sensor signals. Pump operation can be controlled with flow sensor values.
41 *101	External PID process command 1	Inputs commands such as temperature and pressure for external PID control 1 to 3. It is necessary to set function codes J502/J602/J652.
42 *101	External PID feedback value 1	Inputs feedback such as temperature and pressure for external PID control 1 to 3. It is necessary to set function codes J503/J603/J653.
43 *101	External PID manual command 1	This is used if setting PID output manually (MV) when external PID control 1 is canceled.
44 *101	External PID process command 2	Inputs commands such as temperature and pressure for external PID control 2 and 3. It is necessary to set function codes J602/J652.
45 *101	External PID feedback value 2	Inputs feedback such as temperature and pressure for external PID control 2 and 3. It is necessary to set function codes J603/J653.
46 *101	External PID manual command 2	This is used if setting PID output manually (MV) when external PID control 2 is canceled.
47 *101	External PID process command 3	Inputs commands such as temperature and pressure for external PID control 3. It is necessary to set function code J652.
48 *101	External PID feedback value 3	Inputs feedback such as temperature and pressure for external PID control 3. It is necessary to set function code J653.
49 *101	External PID manual command 3	This is used if setting PID output manually (MV) when external PID control 3 is canceled.

*101: Supported with ROM0500 or later.

Note If the same setting is specified for a different terminal, priority is given in the order E61, E62, E63, E66.

E64	Saving of digital reference frequency

E64 specifies how to save the reference frequency specified in digital format by the ▲/▼ keys on the keypad as shown below.

E64 data	Save method
0	The reference frequency will be automatically saved when the main power is turned OFF. At the next power-on, the reference frequency at the time of the previous power-off applies.
1	Pressing the FUNC/DATA key saves the reference frequency. If the control power is turned OFF without pressing the FUNC/DATA key, the data will be lost. At the next power-ON, the inverter uses the reference frequency saved when the FUNC/DATA key was pressed.

E65	Reference loss detection (continuous running frequency)

When the analog frequency command (setting with terminal [12], [C1] (C1 function), terminal [V2], or [C1] (V3 function) has dropped below 10% of the reference frequency within 400 ms, the inverter presumes that the analog frequency command wire has been broken and continues its operation at the frequency determined by the ratio specified by E65 to the reference frequency. And “REF OFF” signal comes on.

(📖 Function codes E20 to E24, E27, data = 33)

When the frequency command level (in voltage or current) returns to a level higher than that specified by E65, the inverter presumes that the broken wire has been fixed and continues to run following the frequency command.

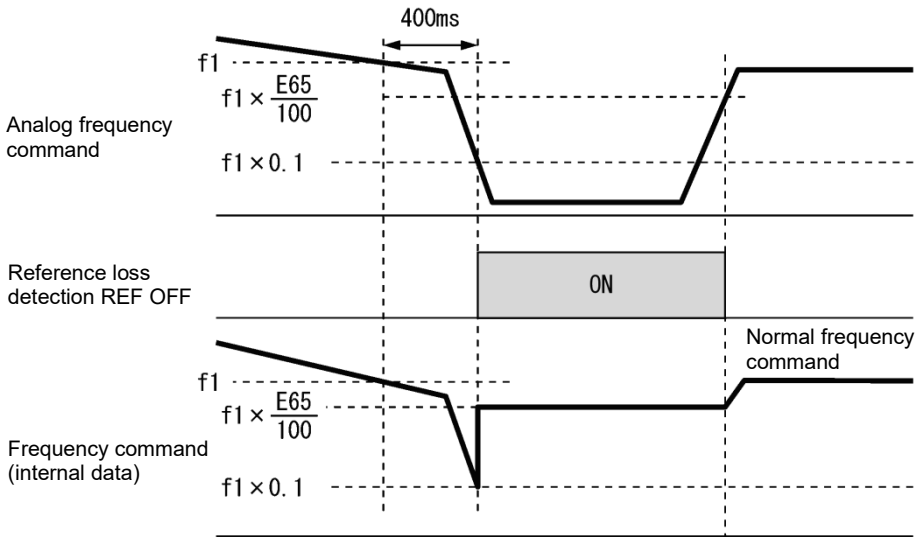

In the diagram above, f1 is the level of the analog frequency command sampled at any given time. The sampling is repeated at regular intervals to continually monitor the wiring connection of the analog frequency command.

- Data setting range:0 (Decelerate to stop), 20 to 120 (%), 999 (Disable)

Note

Avoid an abrupt voltage or current change for the analog frequency command. An abrupt change may be interpreted as a wire break.

Setting E65 data at “999” (Disable) allows the REF OFF signal (“Reference loss detected”) to be issued, but does not allow the reference frequency to change. (The inverter runs at the analog frequency command as specified.)

When E65 = “0” or “999,” the reference frequency level at which the broken wire is recognized as fixed is “f1 × 0.2.”

When E65 = “100” (%) or higher, the reference frequency level at which the wire is recognized as fixed is “f1 × 1.”

The reference loss detection is not affected by the setting of analog input adjustment (filter time constants: C33, C38, C43, C76).

FUNCTION
F Codes
E Codes
C Codes
P Codes
H Codes
A Codes
b Codes
r Codes
J Codes
d Codes
U Codes
y Codes
K Codes

E66	Terminal [C1] (V3 function) (extension function selection) (Refer to E61)

A detailed explanation can be found in the function code E61.

E70 E71	Keypad M/Shift key (Operation selection) Keypad M-LED (Operation selection)

By setting the same value as E01 for E70, the same commands (with certain exceptions) as those for the X terminal function can be assigned to the standard keypad M/Shift key. Refer to the description of function code E01, and E70 (keypad M/Shift key) in “Table 5.2-3 Control input terminal setting list table” for details on selectable command signals by type and each command signal. These function codes are OFF immediately after turning ON the power. These selections toggle between ON and OFF by holding down the key for 1 s or longer while in operation mode. In programming mode, the cursor moves between data and the function code number (shift function), and command signal operation is disabled.

When toggling between ON and OFF, the following is displayed temporarily.

When OFF → ON: n-On

When ON → OFF: n-OFF

* This is displayed regardless of the E70 function assignment.

By setting the same value as E20 for E71, the same monitor signals (with certain exceptions) as those for the Y terminal function can be lit up on the standard keypad M-LED. Refer to the description of function code E20, and E71 (keypad M-LED indicator) in “Table 5.2-4 Control output terminal setting list table” for details on selectable command signals by type and each command signal.

E76	DC link bus low-voltage detection level

“U-EDC” signal comes ON when the DC intermediate voltage drops below E76 (DC link bus low-voltage detection level), and it goes OFF when the DC intermediate voltage exceeds E76.

(📖 Function codes E20 to E24, E27, data = 77)

E78, E79 E80, E81	Torque detection 1 (level and timer) Torque detection 2/low torque detection (level and timer)

E78 specifies the operation level and E79 specifies the timer, for the output signal “TD1”. E80 specifies the operation level and E81 specifies the timer, for the output signal “TD2” or “U-TL”.

In the inverter’s low frequency operation, as a substantial error in torque calculation occurs, no low torque can be detected within the operation range at less than 20 % of the base frequency (F04). (In this case, the result of recognition before entering this operation range is retained.) The U-TL signal goes off when the inverter is stopped.

Since the motor parameters are used in the calculation of torque, it is recommended that auto-tuning be applied by function code P04 to achieve higher accuracy.

Output signal	Assigned data	Detection level	Timer
		Range: 0 to 300%	Range: 0.01 to 600.00 s
“TD1”	46	E78	E79
“TD2”	47	E80	E81
“U-TL”	45	E80	E81

■ **Torque detected 1 – “TD1”, Torque detected 2 – “TD2”**

The output signal TD1 or TD2 comes ON when the torque value calculated by the inverter or torque command exceeds the level specified by E78 or E80 (Torque detection (Level)) for the period specified by E79 or E81 (Torque detection (Timer)), respectively. The signal turns OFF when the calculated torque drops below “the level specified by E78 or E80 minus 5 % of the motor rated torque.” (The minimum ON-duration is 100 ms.)

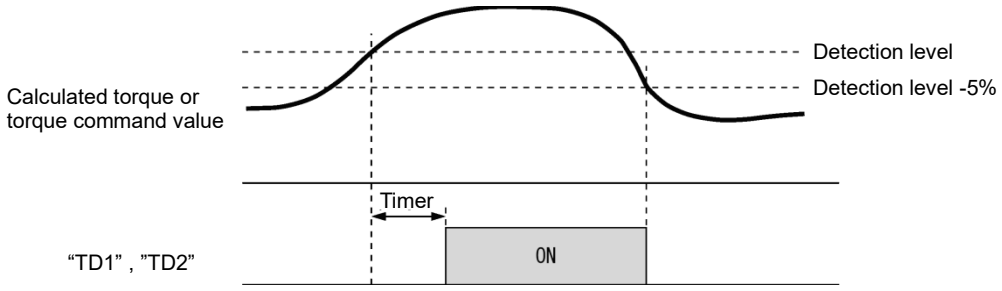

■ **Low torque detected – “U-TL”**

This output signal comes ON when the torque value calculated by the inverter or torque command drops below the level specified by E80 (Low torque detection (Level)) for the period specified by E81 (Low torque detection (Timer)). The signal turns OFF when the calculated torque exceeds “the level specified by E78 or E80 plus 5 % of the motor rated torque.” (The minimum ON-duration is 100 ms.)

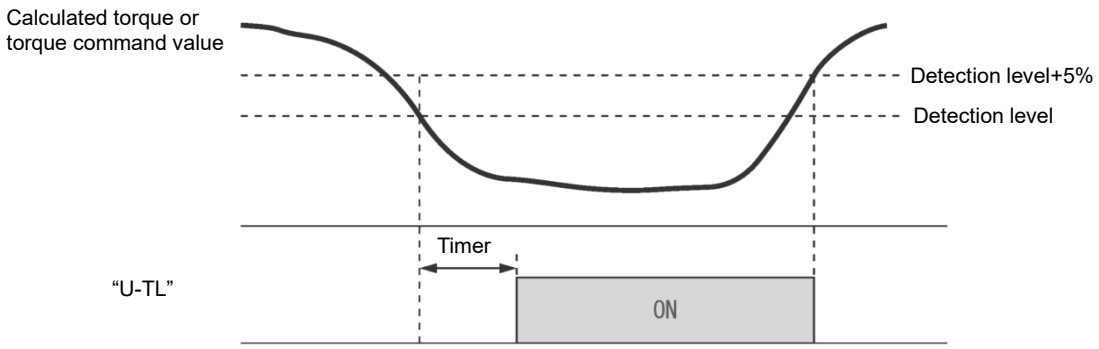

FUNCTION
F Codes
E Codes
C Codes
P Codes
H Codes
A Codes
b Codes
r Codes
J Codes
d Codes
U Codes
y Codes
K Codes

E82,	**Switching Frequency of Accel/Decel Time in Low-Speed Domain**	***101**
E83,	**Acceleration Time in Low-Speed Domain**	***101**
E84	**Deceleration Time in Low-Speed Domain**	***101**

*101: Supported with ROM 0500 or later.

In the case of pumps with high load current in the low-speed range (deep well pumps, etc.), there is a danger of damage to the pump following long-term operation in the low-speed range. (The water supply is low, and the load current is high, resulting in pump burnout.) Long-term operation in this range can be avoided by setting a dedicated acceleration/deceleration time for the low-speed range only.

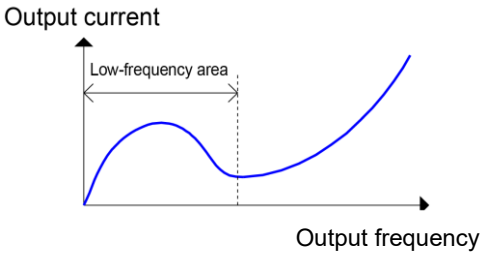

The motor accelerates in E83 (low-speed acceleration time) from the point that it starts running (0 Hz) until E82. After reaching the E82 switching frequency, it accelerates based on the currently selected acceleration time. When the motor stops, it decelerates in E84 (low-speed deceleration time) from E82 to 0 Hz. Please note that this function also works when performing anti-jam reverse rotation reverse rotation, and when PID control is canceled.

Furthermore, this function does not work at F16 (frequency limiter lower limit) or higher. The factory default value for F16 is 0.0 (Hz), and therefore this function does not work, regardless of the E82 setting. When using this function, change the F16 setting to a value other than 0.0 Hz (value greater than E82 setting).

<u>If F16 (frequency limiter lower limit) > E82</u>

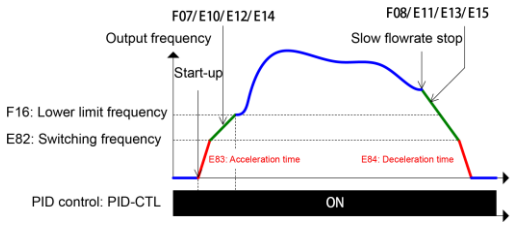

<u>If F16 (frequency limiter lower limit) ≤ E82</u>

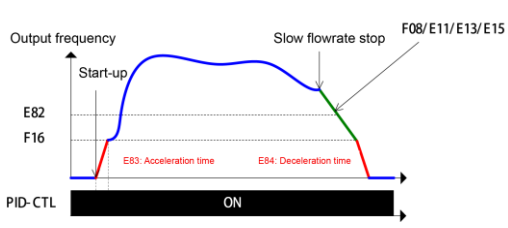

■ Switching frequency of accel/decel time in low-speed domain (E82)

Selects the switching frequency (switching point).

E82 data	Switching frequency
0.0(Inherit)	F16 (frequency limiter (lower limit)) setting value
0.1～120.0Hz	Arbitrary setting value (0.1 to 120.0 Hz)

■ Acceleration time in low-speed domain (E83)

Sets the acceleration time from the point the motor starts rotating until E82 (switching frequency) is reached.

(Time to reach F16 if F16 ≤ E82)

・ Data setting range: 0.00 (Inherit) current effective acceleration time, 0.01 to 3600.00 (s)

■ Deceleration time in low-speed domain (E84)

Sets the deceleration from E82 (switching frequency) until the motor stops.

(Time from F16 to 0 Hz if F16 ≤ E82)

・ Data setting range: 0.00 (Inherit) current effective deceleration time, 0.01 to 3600.00 (s)

E85, E86	Gradual Deceleration Time Switching Frequency , Gradual Deceleration Time (Check valve protection) *101

*101: Supported with ROM0500 or later.

If the valve is closed suddenly after the pump stops, check valves (piping, pump, valves) may be damaged due to the water hammer phenomenon. When check valves close, they are protected by gently lowering the pump speed.

This function works when the E85 (slow deceleration time switching frequency) setting value is other than OFF. However, this function does not work if F16 (frequency limiter lower limit) ≤ E85 (slow deceleration time switching frequency). Please note that this function also works when PID control is canceled.

<u>If F16 (frequency limiter lower limit) > E85</u>

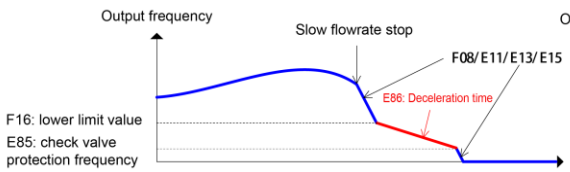

If F16 (frequency limiter lower limit) ≤ E85 (disable)

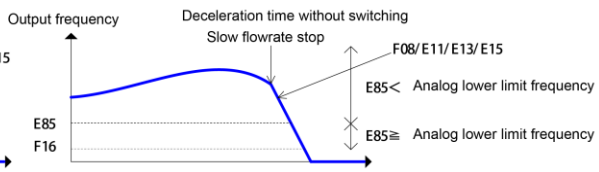

■ Gradual deceleration time switching frequency (E85)

Selects the switching frequency (switching point).

E85 data	Switching frequency
OFF	Disable
0.1～120.0Hz	Arbitrary setting value (0.1 to 120.0 Hz)

■ Gradual deceleration time (E86)

Sets the deceleration from F16 (frequency limiter lower limit) to the E85 slow deceleration time (switching frequency).

・ Data setting range: 0.00 (Inherit) current effective deceleration time, 0.01 to 3600.00 (s)

E98, E99	Terminal [FWD] (Function selection), Terminal [REV] (Function selection) (Refer to E01 to E09)

For details, refer to the descriptions of E01 to E09.

FUNCTION
F Codes
E Codes
C Codes
P Codes
H Codes
A Codes
b Codes
r Codes
J Codes
d Codes
U Codes
y Codes
K Codes

5.3.3 C codes (Control functions)

C01 to C04 **C94 to C96**	**Jump frequency 1, 2 and 3, Jump frequency (Skip width)** **Jump frequency 4 to 6**

These function codes enable the inverter to jump over six different points on the output frequency in order to skip resonance caused by the motor speed and natural frequency of the driven machinery (load).

- While increasing the reference frequency, the moment the reference frequency reaches the bottom of the jump frequency band, the inverter keeps the output at that bottom frequency. When the reference frequency exceeds the upper limit of the jump frequency band, the internal reference frequency takes on the value of the reference frequency. When decreasing the reference frequency, the situation will be reversed. Refer to the left figure below.
- When more than two jump frequency bands overlap, the inverter actually takes the lowest frequency within the overlapped bands as the bottom frequency and the highest as the upper limit. Refer to the right figure below.

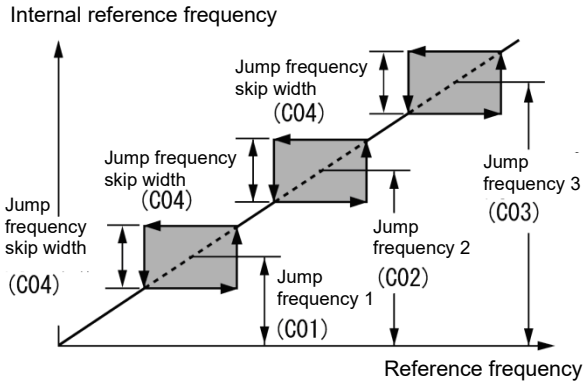

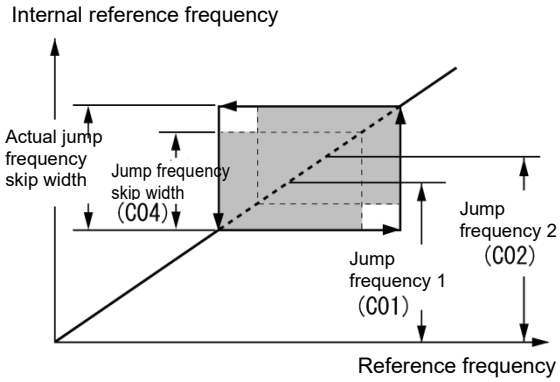

■ **Jump frequency 1 to 6 (C01 to C03, C95 to C96)**

Specify the center of the jump frequency band.

- Data setting range: 0.0 to 599.0 (Hz) (Setting to 0.0 results in no jump frequency band.)

■ **Jump frequency skip width (C04)**

Specify the jump frequency skip width.

- Data setting range: 0.0 to 30.0 (Hz) (Setting to 0.0 results in no jump frequency band.)

C05 to C19	Multistep Frequency 1 to 15

■ **These function codes specify 15 frequencies required for driving the motor at frequencies 1 to 15.**

Turning terminal commands “SS1”, “SS2”, “SS4” and “SS8” ON/OFF selectively switches the reference frequency of the inverter in 15 steps. To use this features, you need to assign “SS1”, “SS2”, “SS4” and “SS8” (“Select multistep frequency”) to the digital input terminals with E01 to E09 (data = 0, 1, 2, and 3).

■ **Multistep frequency 1 to 15 (C05 through C19)**

- Data setting range: 0.00 to 599.0 (Hz)

The combination of “SS1”, “SS2”, “SS4” and “SS8” and the selected frequencies is as follows.

“SS8”	“SS4”	“SS2”	“SS1”	Selected frequency
OFF	OFF	OFF	OFF	Other than multistep frequency*
OFF	OFF	OFF	ON	C05 (Multistep frequency 1)
OFF	OFF	ON	OFF	C06 (Multistep frequency 2)
OFF	OFF	ON	ON	C07 (Multistep frequency 3)
OFF	ON	OFF	OFF	C08 (Multistep frequency 4)
OFF	ON	OFF	ON	C09 (Multistep frequency 5)
OFF	ON	ON	OFF	C10 (Multistep frequency 6)
OFF	ON	ON	ON	C11 (Multistep frequency 7)
ON	OFF	OFF	OFF	C12 (Multistep frequency 8)
ON	OFF	OFF	ON	C13 (Multistep frequency 9)
ON	OFF	ON	OFF	C14 (Multistep frequency 10)
ON	OFF	ON	ON	C15 (Multistep frequency 11)
ON	ON	OFF	OFF	C16 (Multistep frequency 12)
ON	ON	OFF	ON	C17 (Multistep frequency 13)
ON	ON	ON	OFF	C18 (Multistep frequency 14)
ON	ON	ON	ON	C19 (Multistep frequency 15)

* “Other than multistep frequency” includes frequency setting 1 (F01), frequency setting 2 (C30) and other frequency command sources except multistep frequency commands.

FUNCTION
F Codes
E Codes
C Codes
P Codes
H Codes
A Codes
b Codes
r Codes
J Codes
d Codes
U Codes
y Codes
K Codes

C20	**Jogging frequency** **Related function codes:** **H54 and H55 Acceleration/Deceleration time (Jogging)** **H54 and H55 Acceleration/Deceleration time (jogging)** **d09 to d13 Speed control (JOG)**

C20 specifies the operating condition (frequency) to apply in jogging operation.

FUNCTION CODES		Data setting range	Description
C20	Jogging frequency	0.00 to 599.0 (Hz)	Reference frequency for jogging operation
H54	Acceleration time (Jogging)	0.00 to 6000 s	Acceleration time for jogging operation
H55	Deceleration time (Jogging)	0.00 to 6000 s	Deceleration time for jogging operation
d09	Speed control (JOG) Speed command filter	0.000 to 5.000s	Speed control system adjustment element when performing jogging operation under speed sensorless vector control/vector control with speed sensor See d01 to d06 for adjustment method.
d10	Speed control (JOG) Speed detection filter	0.000 to 0.100s	
d11	Speed control (JOG) P gain	0.1 to 200.0 times	
d12	Speed control (JOG) I integral time	0.001 to 1.000s	
d13	Speed control (JOG) Output filter	0.000 to 0.100s	

For details about jogging operation, refer to Chapter 3 “3.3.7 Jogging operation.”

C21 C22 to C28	**Pattern operation mode selection Stage 1 to 7 / Timed operation**

Pattern operation is a function of automatic operation according to the predefined run time, rotational direction, acceleration/deceleration time and reference frequency.

When using this function, set the frequency setting (F01) to 10 (pattern operation).

The following operation patterns are available:

C21: Setting	Operation pattern
0	Pattern operation performed for one cycle and stopped after the cycle.
1	Pattern operation repeatedly performed and immediately stopped with a stop command
2	Pattern operation performed for one cycle and operation continued at the reference frequency after the cycle.
3	Timed operation

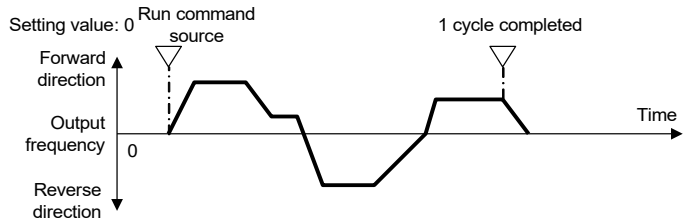

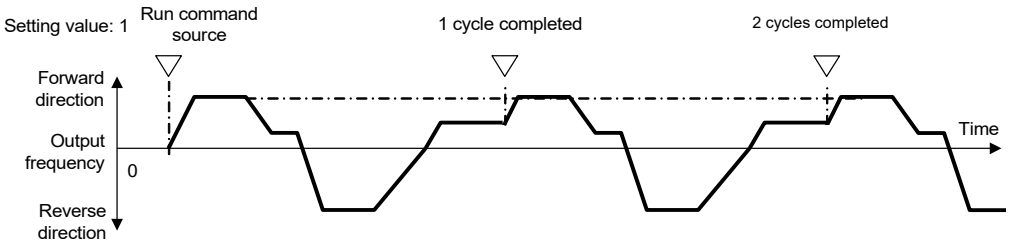

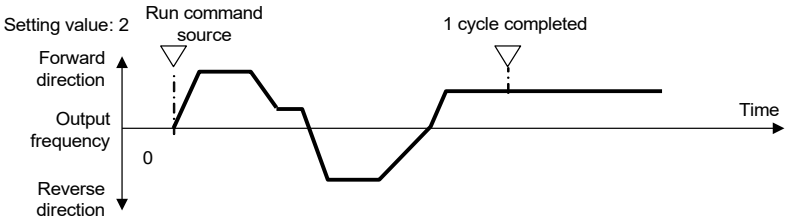

■ **C22 to C28 Stage 1 to Stage 7**

Specify the run time, rotation direction, and acceleration/deceleration time for Stage 1 to Stage 7.

Press the (FUNC/DATA) key three times for each function code to set the following three data.

Setting	Content
1st	Specifies the run time between 0.00 and 6000 s.
2nd	2nd: Specifies the rotational direction F (forward) or r (reverse)
3rd	3rd: Specifies the acceleration/deceleration time between 1 and 4. 1: F07/F08 2: E10/E11 3: E12/E13 4: E14/E15

If the (FUNC/DATA) key is pressed to exit the function code before the three data are specified by pressing the (PRG/RESET) key three times, no data are updated.

For any unused stage, specify 0.0 as the run time.PA2_57 (5002 Sub: 57) to “0”. The stage is skipped and the next stage becomes ready for setting.

■ **Frequency specified by frequency command**

Multistep frequencies 1 to 7 are assigned to the reference frequency of Stage 1 to 7.

■ **Example of pattern operation setting**

C21 (mode selection)	Stage No.	Run time	Rotational direction	Acceleration/deceleration time	Operation (reference) frequency
		Setting value	Setting value	Setting value	
0	Stage 1	60.0	F	2	C05 Multistep frequency 1
	Stage 2	100	F	1	C06 Multistep frequency 2
	Stage 3	65.5	r	4	C07 Multistep frequency 3
	Stage 4	55.0	r	3	C08 Multistep frequency 4
	Stage 5	50.0	F	2	C09 Multistep frequency 5
	Stage 6	72.0	F	4	C10 Multistep frequency 6
	Stage 7	35.0	F	2	C11 Multistep frequency 7

The figure below illustrates the operation.

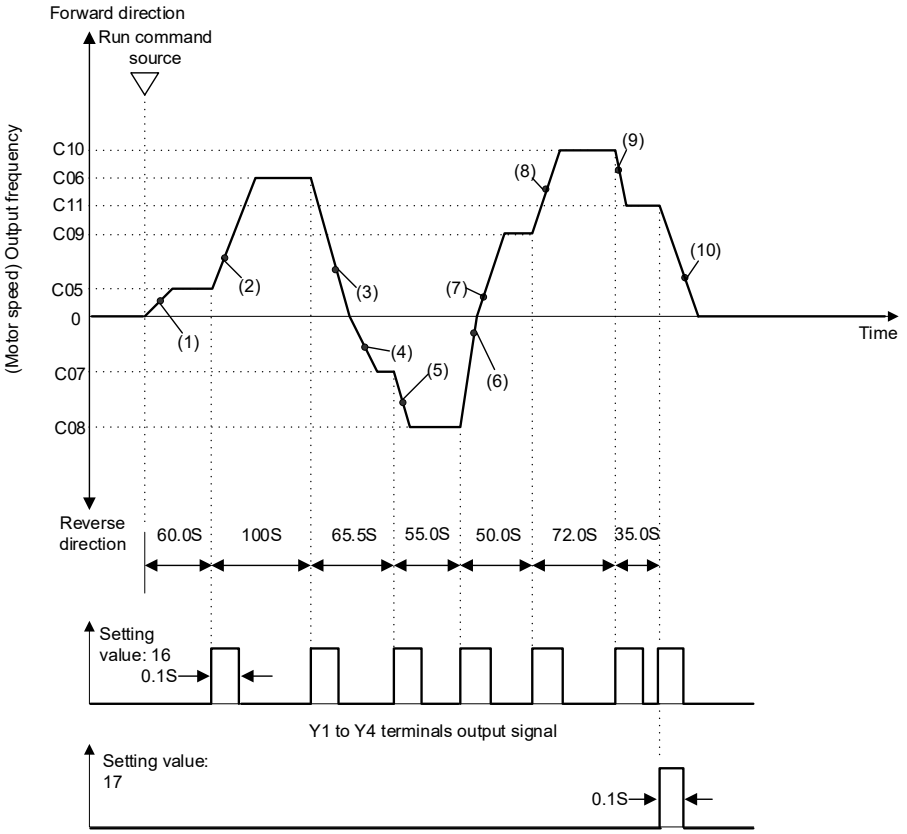

Set according to (1) to (10) Acceleration time or deceleration time

(1)	Acceleration time: E10
(2)	Acceleration time: F07
(3)	Deceleration time: E15
(4)	Acceleration time: E14
(5)	Acceleration time: E12
(6)	Deceleration time: E11
(7)	Acceleration time: E10
(8)	Acceleration time: E14
(9)	Deceleration time: E11
(10)	Deceleration time: F08

F08 Deceleration time 1 setting is used as deceleration time for deceleration to stop after the completion of one cycle.

◆ To run or stop, use input from the (RUN) key of the keypad or by switching the control terminal. Taking the keypad as an example, the motor starts running when the (RUN) key is pressed. By pressing the (STOP) key, stage advance is paused. Press the (RUN) key again to resume operation according to the stages from the point where it was suspended. For alarm stop, press the (PRG/RESET) key to reset the inverter protective functions. Then press the (RUN) key. The suspended progression of the cycle resumes. If a need arises for operation from the first stage "C22 (Stage 1 runtime)" and "C82 (Stage 1 rotational direction and acceleration/deceleration time)" during operation, input a stop command and press the (PRG/RESET) key.

When operation from the first stage is necessary after an alarm stop, press the (PRG/RESET) key for resetting the protective functions and press the (PRG/RESET) key again. For operation with input terminals, use of the "RST" terminal (set "8 (Active ON)" or "1008 (Active OFF)" for any of E01 to E09) function the same way.

Tip
- Pattern operation can be started by either a forward run command (specify F02 = 2 and press the (RUN) key, or specify F02 = 1 and turn the terminal [FWD] ON) or reverse run command (specify F02 = 3 and press the (RUN) key, or specify F02 = 1 and turn the terminal [REV] ON).
- When using terminal [FWD] or terminal [REV], the run command self-hold function does not work. Please use the alternate-type switch.

⚠CAUTION

When pattern operation is started by specifying C21 = 0 and turning the terminal [FWD (REV)] ON, the motor stops after the completion of the last stage even if the terminal [FWD (REV)] is kept turned ON.
In this case, modifying the value for F01 or C30 or switching the control terminal "Hz2/Hz1" ON/OFF without turning the FWD (REV) terminal OFF causes the operation to be immediately resumed according to the reference frequency after the change.

Failure to observe this could result in an accident or injury.

■ Timed operation (C21 = 3)

Select this for timed operation, in which simply specifying the run time and inputting a run command starts motor operation and stops the operation after the specified period has elapsed.

Tip
- To stop the timed operation, press the (STOP) key during timer countdown.
- When the timer period is 0, pressing the (RUN) key does not start operation if C21 = 3.
- An external signal (FWD or REV) can also be used to start operation.

Example of timed operation

Preconfiguration

- To indicate the timer value on the LED monitor, set the data for E43 (LED monitor) to "13" (timer vaule) and data for C21 to "3."
- Specify the reference frequency for timed operation. When the reference frequency is specified by keypad operation and the timer value is indicated, press the (FUNC/DATA) key to switch to speed monitor display and modify the reference frequency.

Timed operation (to start operation with the (RUN) key)

(1) While checking the timer value on the LED monitor, press the (▲)/(▼) key to specify the timer period (in seconds). (The timer value is indicated as an integer without a decimal point on the LED monitor.)

(2) Press the (RUN) key to start motor operation. The timer period counts counted down. After the timer period has elapsed, the operation stops without the need for pressing the (STOP) key. (Timed operation is possible even when the LED monitor indication is not the timer value.)

Note For operation by turning the FWD terminal ON, the indication alternates between "End" and LED monitor display (0 for timer value) when the timed operation has been completed with deceleration to stop. Turning FWD OFF brings back the LED monitor display.

FUNCTION
F Codes
E Codes
C Codes
P Codes
H Codes
A Codes
b Codes
r Codes
J Codes
d Codes
U Codes
y Codes
K Codes

C30	Frequency setting 2 (Refer to F01)

For details on Frequency setting 2, refer to the description for function code F01.

C31 to C35	**Analog input adjustment (terminal [12])** **(Offset, Gain, Filter, Gain reference point, Polarity selection)**
C36 to C40	**Analog input adjustment (terminal [C1]) (C1 function))** **(Offset, Gain, Filter, Gain reference point, range selection)**
C41 to C45	**Analog input adjustment (terminal [V2])** **(Offset, Gain, Filter, Gain reference point, Polarity selection)**
C74 to C78	**Analog input adjustment (terminal [C1]) (V3 function))** **(Offset, Gain, Filter, Gain reference point, Polarity selection)** **Refer to F01 for details on frequency settings.**

C55, C56	**Bias (for PID, Frequency setting 2 (terminal [12]))** **(Bias, Bias reference point) (Refer to F01)**
C61, C62	**Bias (for PID, Frequency setting 2 (terminal [C1]) (C1 function))** **(Bias, Bias reference point)(Refer to F01)**
C67, C68	**Bias (for PID, Frequency setting 2 (terminal [V2])** **(Bias, Bias reference point)(Refer to F01)**
C82, C83	**Bias (for PID, Frequency setting 2 (terminal [C1]) (V3 function))** **(Bias, Bias reference point)(Refer to F01)**

You can adjust the gain, bias, polarity, filter time constant and offset which are applied to analog inputs (voltage inputs to terminals [12], [V2], and [C1] (V3 function) and current input to terminal [C1] (C1 function)).

Adjustable items for analog inputs (excluding those for frequency command 1)

Input terminal	Input range	Bias		Gain		Polarity	Filter	Offset
		Bias	Reference point	Gain	Reference point			
[12]	0 to +10 V, -10 to +10 V	C55	C56	C32	C34	C35	C33	C31
[C1] (C1)	4 to 20 mA, 0 to 20 mA	C61	C62	C37	C39	C40	C38	C36
[V2]	0 to +10 V, -10 to +10 V	C67	C68	C42	C44	C45	C43	C41
[C1] (V3)	0 to +10 V, -10 to +10 V	C82	C83	C75	C77	C78	C76	C74

■ Offsets (C31, C36, C41, C74)

C31, C36, C41 or C74 configures an offset for an analog voltage/current input. The offset also applies to signals sent from the external equipment.

- Data setting range: -5.0 to +5.0(%)

■ Filters (C33, C38, C43, C76)

C33, C38, C43 and C76 provide the filter time constants for the voltage and current of the analog input. The larger the time constant, the slower the response. Specify the proper filter time constant taking into account the response speed of the machine (load). If the input voltage fluctuates due to line noises, increase the time constant.

- Data setting range: 0.00 to 5.00 (s)

■ **Polarity selection for terminal [12], [V2], [C1] (V3 function) (C35, C45, C78)**

C35, C45 and C78 configures the polarity and therefore the input range for analog input voltage.

C35 data	Terminal input specification
0	-10 to +10 V
1	0 to +10 V (Negative value of voltage is regarded as 0 V)

■ **Gain**

Sets the gain for analog input.

• Data setting range: -400.00 to 400.00 (%)

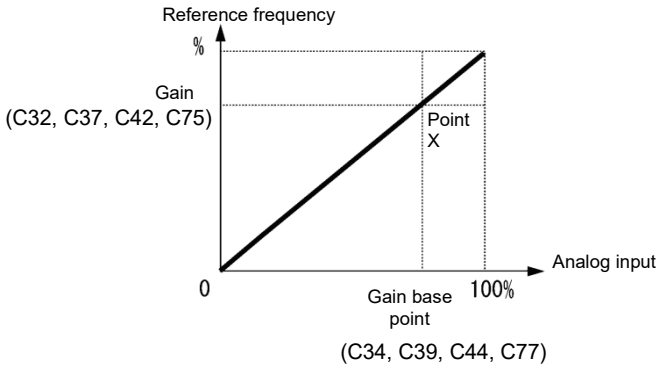

Note To input bipolar (0 to ±10 VDC) analog voltage at analog input (terminal [12]), set function code C35,C45,C75 to “0”. When the data of C35,C45,C75 is “1”, only 0 to +10 VDC effective and negative polar input 0 to -10 VDC regarded as 0 (Zero) V.

• Data setting range: -400.00 to 400.00(%)

■ **Terminal [C1] (C1 function) range / polarity selection (C40)**

Selects the range of current input terminal [C1](C1 function).

C40 data	Terminal input range	Handling when bias value is set to minus
0	4 to 20 mA (factory default)	Limit below 0 point with 0
1	0 to 20 mA	
10	4 to 20 mA	Enable below 0 point as minus value.
11	0 to 20 mA	

In order to use terminal [C1] with the C1 function and V3 function, the following settings are necessary.

[C1] terminal	SW8	C40	C78
When using C1 function (4 to 20 mA)	C1 side	0 (unipolar) 10 (both poles)	Not required
When using C1 function (0 to 20 mA)	C1 side	1 (single pole) 11 (both poles)	Not required
When using V3 function (0 to ±10 V)	V3 side	Not required	0
When using V3 function (0 to +10 V)	V3 side	Not required	1

Refer to Chapter 2 2.2.7 for details on SW8.

Exercise caution as expected operation may not result if the setting above is not conducted accurately.

Note E61, E62, E63, E66 Gain can be used up to the maximum of 400.00% only for terminals for which "Terminal [12], [C1] (C1 function), [V2], and [C1] (V3 function) (extension function selection)" data is set to 10 or 11.
With other functions, the gain value is limited to 200.00% internally even if a large gain value is set.

■ **Gain and bias**

Terminal	PID command, feedback, analog monitor
[12]	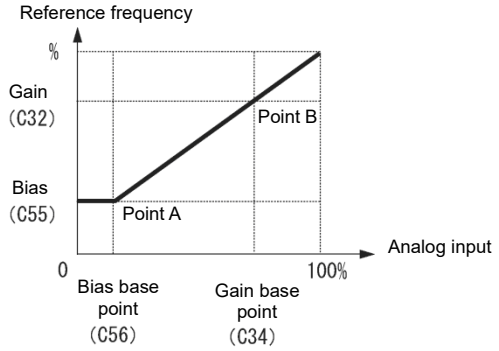
[C1] (C1 function)	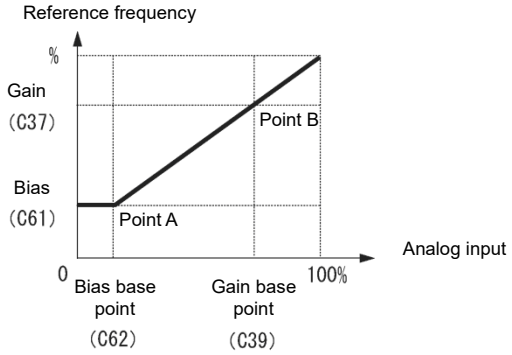
[V2]	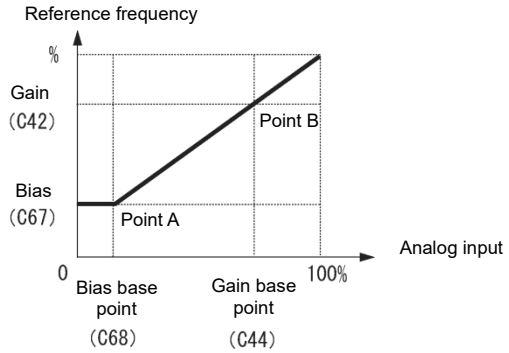
[C1] (V3 function)	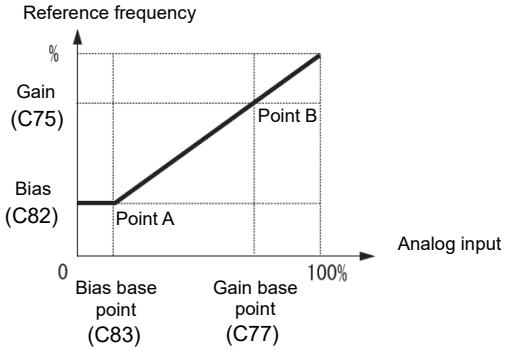

These are biases and bias reference points used for PID command, PID feedback, frequency command 2 and analog monitor. Refer to the description of F01, J01, J101, and J201 for details.

Bias (C55, C61, C67, C82, o66, o82)

- Data setting range: -200.00 to 200.00(%)

Bias reference point (C56, C62, C68, C83)

- Data setting range: 0.00 to 100.00(%)

Specifying the bias as a negative value allows an input to be specified as bipolar for a unipolar analog input. By setting C40 data to 10 or 11 for terminal [C1] (C1 function), the input value takes negative polarity with an analog input of 0 point or lower.

FUNCTION
F Codes
E Codes
C Codes
P Codes
H Codes
A Codes
b Codes
r Codes
J Codes
d Codes
U Codes
y Codes
K Codes

C50	Bias (for Frequency setting 1) (Bias reference point) (Refer to F01)

For details on Frequency setting 1 bias reference point settings, refer to the description for function code F01.

C53 C54	Normal/inverse operation selection (Frequency setting 1) Normal/inverse operation selection (Frequency setting 2)

Switches between the analog frequency setting normal operation and inverse operation.

For details, refer to E01 through E09 (data = 21) for the terminal command IVS ("■ Switch Normal/inverse operation switching "IVS" assignment normal/inverse operation - "IVS"").

C58 C64 C70 C84	Analog input adjustment (for analog monitor (terminal [12])) (Display unit) Analog input adjustment (for analog monitor (terminal [C1])) (C1 function) (Display unit) Analog input adjustment (for analog monitor (terminal [V2])) (Display unit) Analog input adjustment (for analog monitor (terminal [C1])) (V3 function) (Display unit)

The units for the respective analog inputs can be displayed when a multi-function keypad (TP-A2SW) is used. Set these codes to use for command and feedback values of the PID control and the analog input monitor. Use the multi-function keypad to display the SV and PV values of the PID control and the analog input monitor on the main and sub-monitors. Indications are given in the specified units.

Setting value	Display unit	Setting value	Display unit	Setting value	Display unit	Setting value	Display unit
1	No unit	[Flow]		[Pressure]		[Torque]	
2	%	20	m3/s	40	Pa	65	N·m
4	r/min	21	m3/min	41	kPa	66	lb ft
7	kW	22	m3/h	42	MPa	[Length]	
8	HP	23	L/s	43	mbar	70	mm
[Speed]		24	L/min	44	bar	74	71
10	mm/s	25	L/h	45	mmHg	72	m
11	mm/m	26	GPS	46	PSI	73	km
12	mm/h	27	GPM	47	mWG	74	in
13	m/s	28	GPH	48	inWG	75	Ft
14	m/min	29	CFS	49	inHg	76	Yd
15	m/h	30	CFM	50	WC	77	mi
16	FPS	31	CFH	51	FT WG	[Concentration]	
17	FPM	32	kg/s	52	ATM	80	ppm
18	FPH	33	kg/m	[Temperature]		[Volume]	
19	SPM	34	kg/h	60	K	90	m^3
		35	lb/s	61	°C	91	L
		36	ib/m	62	°F	92	GAL
		37	ib/h			93	OZ
		38	AF/Y				

C59, C60	**Analog input adjustment (terminal [12]) (Maximum scale, Minimum scale)**
C65, C66	**Analog input adjustment (terminal [C1] (C1 function)) (Maximum scale, Minimum scale)**
C71, C72	**Analog input adjustment (terminal [V2]) (Maximum scale, Minimum scale)**
C85, C86	**Analog input adjustment (terminal [C1] (V3 function)) (Maximum scale, Minimum scale)**

Values of the analog input monitor (terminals [12], [V2], and [C1] (C1 and V3 functions) can be converted into easily recognizable physical quantities for display. This function can also be used for PID feedback and PID command values.

- Data setting range: (maximum scale and minimum scale) -999.0 to 0.00 to 9990.0

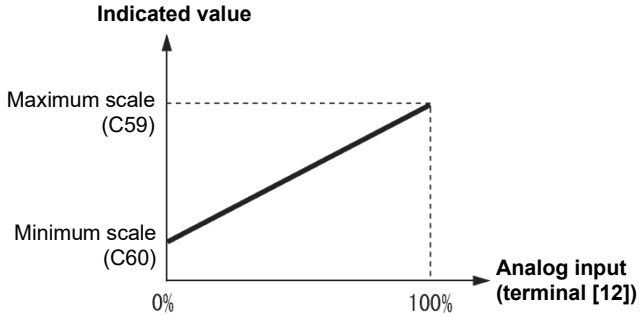

C89	**Frequency compensation 1 with communication (Numerator)**
C90	**Frequency compensation 2 with communication (Denominator)**

A compensation value can be set for frequency settings via RS-485 communication or field bus communication. This is used if wishing manually compensate the frequency determined by the system. By displaying these function codes with the keypad, values are displayed in hexadecimal format. If data 0 is set, it is handled as 1.

• Data setting range: -32768 to 32767 (keypad display: h.8000 to h.7FFF)

$$\text{Last frequency setting} = \text{Frequency setting with communication x } \frac{\text{C89: Frequency compensation 1 (numerator)}}{\text{C90: Frequency compensation 2 (denominator)}}$$

C94 to C96	**Jump frequency 4 to 6** **(Refer to C01)**

A detailed explanation can be found in the function code C01.

C99	**Digital setting frequency** **(Refer to F01)**

Displays the digital setting frequency set with the keypad (▲ / ▼) key.
C99 is copied using the keypad or FRENIC-Loader4, allowing the digital setting frequency to be copied.

FUNCTION
F Codes
E Codes
C Codes
P Codes
H Codes
A Codes
b Codes
r Codes
J Codes
d Codes
U Codes
y Codes
K Codes

5.3.4 P codes (Motor 1 parameters)

To use the integrated automatic control functions such as auto torque boost, torque calculation monitoring, auto energy saving operation, torque limiter, automatic deceleration (anti-regenerative control), auto search for idling motor speed, slip compensation, vector control without speed sensor (torque vector), droop control, and overload stop, it is necessary to build a motor model in the inverter by specifying proper motor parameters including the motor capacity and rated current. Consequently, it is necessary to correctly set not only the motor capacity and rated current, but also all constants.

FRENIC-MEGA is equipped with constants for Fuji standard motor 8-series motors, Fuji standard high-efficiency premium motors, and Fuji standard synchronous motors. To use these Fuji motors, it is enough to specify motor parameters for P99 (Motor 1 selection). If the cabling between the inverter and the motor is long (generally, 20 m (66 ft) or longer) or a reactor is inserted between the motor and the inverter, however, the apparent motor parameters are different from the actual ones, so auto-tuning or other adjustments are necessary.

Refer to Chapter 4 “4.8.1 Induction motor operation” and “4.8.2 Synchronous motor operation” for details on the auto tuning procedure.

When using a motor made by other manufacturers or a Fuji non-standard motor, obtain the datasheet of the motor and specify the motor parameters manually or perform auto-tuning.

P01	**Motor 1 (No. of poles)**

P01 specifies the number of poles of the motor. Enter the value given on the nameplate of the motor. This setting is used to display the motor speed on the LED monitor and to control the speed (refer to E43). The following expression is used for the conversion.

Motor rotational speed (min-1) = 120/No. of poles x Frequency (Hz)

- Data setting range: 2 to 128 (poles)

P02	**Motor 1 (Rated capacity)**

P02 specifies the rated capacity of the motor. Enter the rated value given on the nameplate of the motor.

P02 data	Unit	Function
0.01 to 1000	kW	When P99 (Motor 1 selection) = 0, 2 to 5, 20 to 23
	HP	When P99 (Motor 1 selection) = 1

When changing P02 with the keypad, take into account that the following function code data will be automatically rewritten with the initial values.

Applicable function codes: P03, P06 to P23, P30, P53 to P56, P60 to P65, P74, P85, P87, P90, H46

P03	**Motor 1 (Rated current)**

P03 specifies the rated current of the motor. Enter the rated value given on the nameplate of the motor.

- Data setting range: 0.00 to 2000 (A)

P04	Motor 1 (Auto-tuning)

The inverter automatically detects the motor parameters and saves them in its internal memory. If using a Fuji standard motor (incl. old model IE1 induction motors and synchronous motors) with a standard connection method, there is generally no need to perform tuning.

There are two types of auto-tuning as listed below. Select the appropriate one considering the limitations in your equipment and control mode. In the following table, IM indicates induction motor, and PM indicates synchronous motor.

P04 data	Auto tuning	Enable	Motor parameters to be tuned	
0	Disable	---	---	
1	Tune the motor while it is stopped	Tunes while the motor is stopped.	IM	Primary resistance (%R1) (P07) Leakage reactance (%X) (P08) Rated slip frequency (P12) %X correction factor 1,2 (P53, P54)
			PM	Armature resistance (P60) d-axis inductance (P61) q-axis inductance (P62) For adjustment by manufacturer (P84, P88)
2	Rotation tuning	After tuning the motor in a stopped state, retunes it running at 50% of the base frequency.	IM	No-load current (P06) Primary resistance (%R1) (P07) Leakage reactance (%X) (P08) Rated slip frequency (P12) %X correction factor 1,2 (P53, P54) Magnetic saturation factor 1 to 5 (P16 to P20) Magnetic saturation expansion coefficient a, b, c (P21 to P23)
			PM	Armature resistance (P60) d-axis inductance (P61) q-axis inductance (P62) Motor induced voltage (P63) For adjustment by manufacturer (P84, P88)
4	Magnetic pole position offset tuning	The motor is run at the speed set at d80, and tuning is performed.	PM	Magnetic pole position offset (P95)
5	Tune the motor while it is stopped	Tunes while the motor is stopped.	IM	Primary resistance (%R1) (P07) Leakage reactance (%X) (P08) %X correction factor 1,2 (P53, P54)

*1 Refer to the motor constants in “Table 5.3-2 Function codes to be switched” in “5.3.7 A,b, r codes (Motor 2 to 4 parameters)” for the motor constants for motor 2 to 4.

Refer to Chapter 4 “4.8.1 Induction motor operation” and “4.8.2 Synchronous motor operation” for details on the auto tuning procedure.

Note In any of the following cases, perform auto-tuning since the motor parameters are different from those of Fuji standard motors so that the best performance cannot be obtained under some conditions. In cases such as this, perform auto tuning.

- The motor to be driven is a non-Fuji motor or a non-standard motor.
- The wiring distance between the inverter and the motor is too long (generally 20 m or more).
- A reactor is inserted between the motor and the inverter.

Other applicable cases

Note If P04 = 2, or tuning is performed under vector control with permanent magnet type speed sensor (F42 = 16), the motor may be driven in the opposite direction from the command direction. If this is not permissible, set the H08 rotation direction restriction.

■ **Functions whose performance is affected by the motor parameters**

Function	Related function codes (representative)
Auto torque boost	F37
Output torque monitor	F31
Load factor monitor	F31
Auto energy saving operation	F37
Torque limit control	F40
Anti-regenerative control	H69
Auto search	H09
Slip compensation	F42
Dynamic torque vector control	F42
Dynamic torque vector control with sensor	F42
Vector control with speed sensor	F42
Sensorless vector control	F42
Sensorless vector control (synchronous motors)	F42
Vector control with sensor (synchronous motors)	F42
Torque control	H18
Droop control	H28
Torque detection	E78 to E81
Contacting the stopper	J90 to J92
Brake signal (Brake-release torque)	J95

P05	Motor 1 (Online tuning)

When vector control without speed sensor (dynamic torque vector) or slip compensation control is used for long-time operation, the motor parameters change along with motor temperature rise.

If motor parameters change, the amount of speed compensation may change to cause the motor speed to be different from the initial speed.

Enabling online tuning allows the identification of the motor parameters that match the change in the motor temperature, which minimizes the motor speed variation.

To use this function, specify “2” for auto-tuning (P04).

Note Online tuning is enabled only when F42 = 1 (Vector control without speed sensor) or F42 = 2 (V/f control with slip compensation active) and F37 = 2, 5 (auto torque boost).

P06 to P08	Motor 1 (No-load current, %R1 and %X)

P06 through P08 specify no-load current, %R1 and %X, respectively. Obtain the appropriate values from the test report of the motor or by calling the manufacturer of the motor. Performing auto-tuning automatically sets these parameters.

- No-load current: Input the value obtained from the motor manufacturer.
- %R1: Enter the value calculated by the following expression.

$$\%R1 = \frac{R1 + \text{Cable } R1}{V / (\sqrt{3} \times I)} \times 100\ (\%)$$

R1: Primary resistance of the motor (Ω)
Cable R1: Resistance of the output cable (Ω)
V: Rated voltage of the motor (V)
I: Rated current of the motor (A)

- %X: Enter the value calculated by the following expression.

$$\%X = \frac{X1 + X2 \times XM / (X2 + XM) + \text{Cable } X}{V / (\sqrt{3} \times I)} \times 100\ (\%)$$

X1: Primary leakage reactance of the motor (Ω)
X2: Secondary leakage reactance of the motor (converted to primary) (Ω)
XM: Exciting reactance of the motor (Ω)
Cable X: Reactance of the output cable (Ω)
V: Rated voltage of the motor (V)
I: Rated current of the motor (A)

Note For reactance, use the value at the base frequency (F04).

P09 to P11	Motor 1 (Slip compensation gain for driving, Slip compensation response time, Slip compensation gain for braking)

P09 and P11 determine the slip compensation amount in % for driving and braking individually and adjust the slip amount from internal calculation. Setting to 100% fully compensates for the rated slip of the motor. Excessive compensation (100 % or more) may cause hunting (undesirable oscillation of the system), so carefully check the operation on the actual machine.

P10 determines the response time for slip compensation. Basically, there is no need to modify the default setting. If you need to modify it, consult your Fuji Electric representatives.

Function code		Operation (slip compensation)
P09	Slip compensation gain (for drive)	Adjust the slip compensation for driving. Slip compensation amount when driving = Rated slip x Slip compensation gain (when driving)
P11	Slip compensation gain (braking)	Adjust the slip compensation amount when braking. Slip compensation amount when braking = Rated slip x Slip compensation gain (when braking)
P10	Slip compensation response time	Set the slip compensation response time. Basically, there is no need to modify the setting.

For details about slip compensation control, refer to the description of function code F42.

FUNCTION
F Codes
E Codes
C Codes
P Codes
H Codes
A Codes
b Codes
r Codes
J Codes
d Codes
U Codes
y Codes
K Codes

P12	Motor 1 (Rated slip)

Sets the motor rated slip. Obtain the appropriate values from the test report of the motor or by calling the manufacturer of the motor. Performing auto-tuning automatically sets these parameters.

- Rated slip: Convert the value obtained from the motor manufacturer to Hz using the following expression and enter the converted value.

  (Note: The motor rated value on the nameplate sometimes shows a larger value.)

$$\text{Rated slip frequency (Hz)} = \frac{(\text{Synchrono us speed} - \text{Rated speed})}{\text{Synchronou s speed}} \times \text{Base frequency}$$

📖 For details about slip compensation control, refer to the description of F42.

P13 to P15	Motor 1 (Iron loss factor 1 to 3)

Inputs the exciting current required to create the magnetic flux produced inside the motor, and the characteristics of the produced magnetic flux.

The combination of P99 (Motor 1 selection) and P02 (Motor 1 rated capacity) data determines the standard value.

Basically, there is no need to modify the setting.

P16 to P23	Motor 1 (Magnetic saturation factors 1 to 5, and a, b, c)

Inputs the exciting current required to create the magnetic flux produced inside the motor, and the characteristics of the produced magnetic flux. The combination of P99 (Motor 1 selection) and P02 (Motor 1 rated capacity) data determines the standard value. Performing auto-tuning while the motor is rotating (P04 = 2) sets the value of these factors automatically.

P24	Motor 1 (Load inertia 1)

The load and motor inertia total is set with the theoretical acceleration/deceleration time.

<u>Theoretical acceleration/deceleration time calculation formula</u>

With motor rated output P [W], the acceleration time when support is provided to help the “total moment of inertia J [kgm2] load converted to the motor shaft (including motor rotor) at motor rated torque at synchronous rotation speed N [r/min]” accelerate from 0 [r/min] to base rotation speed N [r/min] is taken to be the theoretical acceleration time T [s], and this calculation result is set.

$$T[s]=(2\pi N/60)^2 \times J/P$$

- By repeatedly accelerating and decelerating 1 to multiple times with an actual load applied, the moment of inertia is estimated. The estimation results can be checked at “Estimated inertia acceleration/ deceleration time conversion value” on the keypad run status monitor.
  By then setting d30 to “1” while the motor is stopped, the “Estimated inertia acceleration/ deceleration time conversion value” is set for P24. Furthermore, the ASR parameter suitable for the “Estimated inertia acceleration/deceleration time conversion value” is automatically set.

- P24 (A38/b38/r38) can alo be set manually. Calculate the theoretical acceleration time conversion value from the moment of inertia for the entire equipment, and set the value manually while the equipment is stopped. The “estimated inertia acceleration/deceleration time conversion value” is overwritten with the P24 setting value. And by setting d30 to “1”, an ASR parameter suitable for the moment of inertia (theoretical acceleration/deceleration time) is set for P24.

When operation is then performed, estimation of the moment of inertia is resumed.

P30	**Motor 1 (Synchronous motor magnetic pole position detection selection)** **Related function codes:** **P74: Synchronous motor 1 (Current command value when starting)** **P87: Synchronous motor 1 (NS discrimination current command value)** **d80: Synchronous motor 1 (Magnetic pole position draw-in frequency)**

P30 specifies the magnetic pole position detection mode. Select the appropriate mode that matches the synchronous motor to be used.

P30 data	Function
0: Current draw method	Magnetic pole position detection is not performed. At the start of driving the motor, the inverter supplies current specified by P74 to pull in the magnetic pole position. In this position detection mode, the motor may rotate slightly in the direction opposite to the commanded direction depending upon the current motor shaft position.
1: IPM (interior permanent magnet) motor method 1	The inverter starts the motor with the magnetic pole position detection suitable for synchronous motors. The reference current for polarity discrimination specified by P87 applies. Usually it is not necessary to change the factory default.
2: For SPMSM (Surface permanent magnet synchronous motor)	The inverter starts the motor with the magnetic pole position detection suitable for surface magnet type synchronous motors.
3: Current draw method for IPM motors	The inverter starts the motor with the magnetic pole position detection suitable for synchronous motors causing no magnetic saturation. In this position detection mode, the motor may rotate slightly in the direction opposite to the commanded direction depending upon the current motor shaft position.
4: For IPM (embedded magnet) motor type 2	By superimposing high-frequency voltage on the motor control voltage, the saliency of the IPM (interior permanent magnet) motor inductance is used to improve the sensorless speed detection accuracy at low speed, and to improve the speed control and torque limiting performance. Depending on the synchronous motor characteristics, it may not be possible to use this method. This method can be used with the Fuji Electric standard synchronous motor GNB2 series.

Tip The reference current for polarity discrimination specified by P87 applies. Usually it is not necessary to change the factory default.

Note During the magnetic pole position pull-in operation or the magnetic pole position detection, the motor cannot generate enough torque. When applying to an application which requires torque when starting, use the brake signal “BRKS” and magnetic pole position detection complete signal “PTD” to ensure that the machine brake is not released until the magnetic pole position draw-in operation is complete.
(📖 Function code E20)

When adopting vector control with sensor for synchronous motors, the starting operation will be as shown in the following table based on each function code combination.

F42 data	d14 data	P95 data	P30 data	Operation when starting
16: Vector control with sensor for PM	2: A, B phase 90° phase difference, Z phase	999 (Offset not adjusted)	0: Current draw method 3: Current draw method for IPM motors	<Unable to start> An Err alarm occurs, and the motor does not start. Adjust P95.
			1, 4: Method for IPM motors 2: Method for SPM motors	<Magnetic pole position detection start> The motor starts from 0 Hz following magnetic pole position detection.
		0.0 to 359.9° (Offset adjustment complete)	0, 3	<Magnetic pole position draw-in start> The magnetic pole position draw-in operation is performed at the frequency set at d80 when turning ON the inverter power for the first time. The motor accelerates to the command speed after magnetic pole position draw-in is complete. The motor starts (normal start) from 0 Hz from the next time onward. The time required for the magnetic pole position draw-in operation is a maximum of one machine angle rotation. (📖 Function code d80)
			1, 2, 4	<Magnetic pole position detection start> The motor starts from 0 Hz following magnetic pole position detection when turning ON the inverter power for the first time. The motor starts (normal start) from 0 Hz from the next time onward.
	4: A, B phase 90° phase difference, UVW signal	999 (Offset not adjusted)	0, 3	<Unable to start> An Err alarm occurs, and the motor does not start. Adjust P95.
			1, 2, 4	<Magnetic pole position detection start> The motor starts from 0 Hz following magnetic pole position detection.
		0.0 to 359.9° (Offset adjustment complete)	Not required	<Normal start> The motor starts from 0 Hz.

Note During the magnetic pole position pull-in operation or the magnetic pole position detection operation, the motor is unable to generate enough torque. When applying to an application which requires torque when starting, use the brake signal “BRKS” and magnetic pole position detection complete signal “PTD” to ensure that the machine brake is not released until the magnetic pole position draw-in operation and magnetic pole position detection operation are complete. (📖 Function code E20)

P40, P41	For adjustment by manufacturer

These function codes are for adjustment by the manufacturer. Unless otherwise specified, do not access these function codes.

P53, P54	Motor 1 (%X correction factor 1, 2)

This is a factor for correcting leakage reactance %X. Basically, there is no need to modify the setting.

P55	Motor 1 (Torque current under vector control)

Sets the torque current rated value under vector control with speed sensor.
The combination of P99 (Motor 1 selection) and P02 (Motor 1 rated capacity) data determines the standard value.
To change the standard value, do so after specifying these settings.
Basically, there is no need to modify the setting.

P56	Motor 1 (Induced voltage factor under vector control)

Sets the induced voltage under vector control with speed sensor.
The combination of P99 (Motor 1 selection) and P02 (Motor 1 rated capacity) data determines the standard value.
To change the standard value, do so after specifying these settings.
Basically, there is no need to modify the setting.

P57	Motor 1 (For adjustment by manufacturer)

This function code is for adjustment by the manufacturer. Unless otherwise specified, do not access these function codes.

P60 to P64	Motor 1 (Synchronous motor armature resistance, d-axis inductance, q-axis inductance, Induced voltage, Iron loss)

P60 through P64 specify the armature resistance, d-axis inductance, q-axis inductance, induced voltage and iron loss of the motor, respectively. Obtain the appropriate values from the test report of the motor or by calling the manufacturer of the motor. Furthermore, P60 to P63 are set automatically by performing auto tuning.

P65, P85	Motor 1 (Synchronous motors q-axis inductance magnetic saturation correction, Flux limitation value)

These are the control parameter for PMSMs. Normally, it is not necessary to change the data of these function codes.

P74	Motor 1 (Synchronous motors - Reference current when starting)

When the motor starts, the set starting current flows in the area at or below the output frequency level set at P89, the magnetic pole position is drawn in, and operation is performed. Increase the setting value if the torque is insufficient.

FUNCTION
F Codes
E Codes
C Codes
P Codes
H Codes
A Codes
b Codes
r Codes
J Codes
d Codes
U Codes
y Codes
K Codes

P87	Synchronous motor 1 (NS discrimination current command value)

Refer to P30.

P83, P84, P86, P88	Motor 1 (For adjustment by manufacturer)

These function codes are for adjustment by the manufacturer. Unless otherwise specified, do not access these function codes.

P89	Motor 1 (Synchronous motor control switching level)

These are the control parameter for PMSMs. Normally, it is not necessary to change the data of these function codes.

P90	Motor 1 (Synchronous motor overcurrent protection level)

Sets the synchronous motor demagnetization limit current value with an effective value. Check the demagnetization limit current value with the motor manufacturer.

Synchronous motors have a current limit to prevent demagnetization of permanent magnet. If a current exceeding that limit flows through the motor, it weakens the magnet force of permanent magnet so that the motor does not get the desired characteristics.

To prevent it, P90 specifies the overcurrent protection level. If a current flows exceeding the level, the inverter causes an overcurrent protection alarm OC1, OC2 or OC3.

P95	Motor 1 (Synchronous motor magnetic pole position sensor offset)

Adjusts the offset with the actual magnetic pole position for PM motors with magnetic pole position sensor, and detection position with magnetic pole position sensor. If using a Fuji standard synchronous motor (GNF2 series), set the magnetic pole position offset value indicated on the product tag.

This can be adjusted automatically by auto tuning.

P99	Motor 1 selection

P99 specifies the motor type to be used.

P99 data	Function
0	Motor characteristics 0 (Fuji standard IM, 8-series)
1	Motor characteristics 1 (HP rating IMs)
2	Motor characteristics 2 (Fuji dedicated motors for vector control)
3	Motor characteristics 3 (Fuji standard IM, 6-series Refer to Note below)
4	Other
5	Motor characteristics 5 (Fuji premium efficiency motors)
20	Other synchronous motors
21	Fuji standard synchronous motors (GNB2 series)
22	Fuji standard synchronous motors (GNF2 series, with magnetic pole position sensor)
23	Fuji standard synchronous motors (GNP1 series)

The setting range is 0 to 5 when F42 = 0 to 6, and 20 to 23 when F42 = 15 or 16.

To select the motor drive control or to run the inverter with the integrated automatic control functions such as auto torque boost and torque calculation monitoring, it is necessary to specify the motor parameters correctly.

Change procedure

First select the motor type with P99 from Fuji standard motors 8-series, set P02 (capacity) and then initialize the motor parameters with H03. The required motor parameters (P01, P03, P06 to P23, P53, P55 to P65, P74, P83 to P85, P87 to P90, H46) are automatically set.
The data of F09 (Torque boost 1), H13 (Restart mode after momentary power failure (Restart time)), and F11 (Electronic thermal overload protection for motor 1 (Overload detection level)) depends on the motor capacity, but the process stated above does not change them. Specify and adjust the data during a test run if needed.

Note If using the Fuji standard IM, 6-series, set P99 = 3 and carry out the change procedure above. Then, either perform auto-tuning (P04 = 1: Tune the motor while it is stopped) and specify the motor parameters.

FUNCTION
F Codes
E Codes
C Codes
P Codes
H Codes
A Codes
b Codes
r Codes
J Codes
d Codes
U Codes
y Codes
K Codes

High induction motor efficiency (premium efficiency motors)

A “top runner system” was established and made obligatory in Japan through the Energy Conservation Act in 2015, and Fuji has since then been selling premium efficiency motors which conform to efficiency class IE3.
In comparison to conventional induction motors (IE1), premium efficiency motors (IE3) have the following features.

Typical comparison of induction motors (IE1) and premium efficiency motors (IE3)

Item	Induction motors (IE1)	Premium efficiency motors (IE3)
Armature resistance	High	Low
Moment of inertia	Low	High
Rated slip	High	Low

Points to bear in mind and remedies for phenomena that occur when combining premium efficiency motors (IE3) with inverters

If changing a combination of a conventional induction motor (IE1) and inverter to a premium efficiency motor (IE3) and inverter, or if a conventional induction motor (IE1) driven by a commercial power supply is changed to a premium efficiency motor (IE3) and inverter, the following phenomena may occur. These phenomena should be handled with the remedies indicated.

No.	Phenomenon	Remedy	Point to bear in mind
1	• Overcurrent protection [OC1] is triggered when the motor starts. • The frequency does not increase. • Motor thermal protection [OL1] is triggered, and continuous operation is no longer possible at low speed.	• Reduce torque boost (Fuji Electric inverter function code [F09]).	• Since the armature resistance tends to drop as shown in the table shown above under acceleration, constant velocity, and deceleration characteristics. In the case of commonly used V/F control, motor current increases, and in the worst case, motor thermal protection may be triggered.
2	• Overvoltage protection [OV2] is triggered when decelerating. • Deceleration time increases.	• Enable strong break control under deceleration characteristics (set Fuji Electric inverter function code [H71] to 1 or 2). • Increase the deceleration time (Fuji Electric inverter function code [F08]). • Or set torque limiting anti-regenerative control (Fuji Electric inverter function code [H69]).	• Since the moment of inertia tends to increase, regenerative energy increases with the current deceleration time in the case of commonly used V/F control under deceleration characteristics, and in the worst case, overvoltage protection is triggered.
3	• The equipment speed is too fast, or the fan air flow is too high.	• Readjust the rated slip (Fuji Electric inverter function code [P12]) (when slip compensation enabled). • Lower the set frequency (when slip compensation disabled).	• The rated slip has decreased, and therefore if the machine conditions are the same, the motor rotation speed may become higher than before.
4	• An [Er7] alarm occurred during motor tuning.	• Reduce torque boost (Fuji Electric inverter function code [F09]).	• The armature resistance tends to be lower than conventional induction motors (IE1), and therefore at the factory default torque boost (Fuji Electric inverter function code [F09]), the motor current will be high, and an Er7 alarm may occur.

5.3.5 H codes (High performance functions)

H00	Simulated operation

The simulated operation function is used at the following times, and is performed without inverter output.

- When wishing to operate run commands and digital input terminals via a terminal block or communication in order to check whether the inverter functions.
- When wishing to check digital output terminals and analog voltage/current, and pulse output, etc.

If performing vector control or feedback control such as V/f control with sensor, acceleration will not be possible with the speed detection value at zero, meaning that it will not be possible to carry out tests of digital input/output terminals such as speed arrival with the inverter alone. By selecting simulated operation with this function code, a machine model is configured inside the inverter, and simulated feedback signals are generated, enabling acceleration without connecting a motor. With simulated operation, however, no voltage is produced, and therefore the current monitor value will always be zero even if a motor is connected. Simulated operation can be performed even for other than control with sensor, and therefore this function can be used in cases where you do not want to produce output voltage during testing.

⚠CAUTION

There is no inverter output when performing simulated operation, but digital output signals such as “RDY”, “RUN”, “RUN2”, and “AX” turn ON. If the machine brake is controlled with a RUN signal or frequency detection signal, etc., ensure that the machine brake is not released unintentionally. Furthermore, voltage is not produced at the inverter output side (U, V, W), but in the interests of safety, either isolate the output side, or shut off the output side with a magnetic contactor.

Failure to observe this could result in an accident or injury.

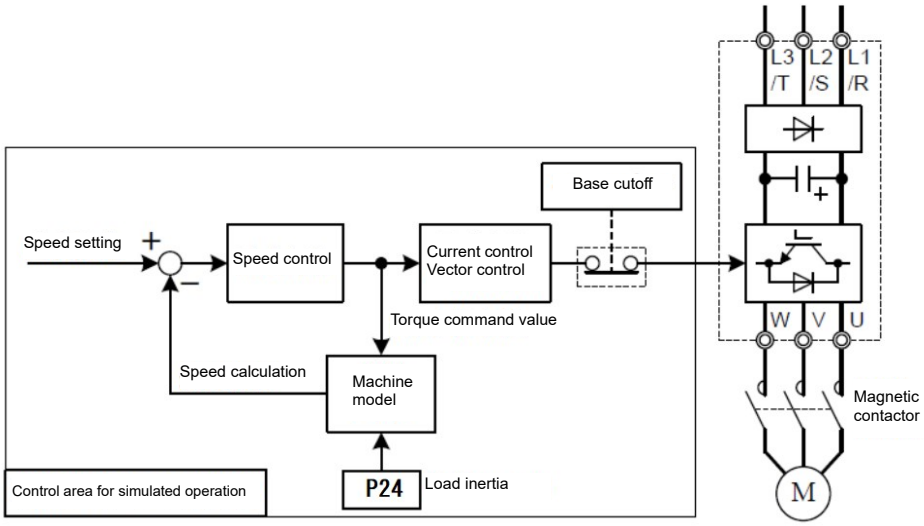

With machine models simulated with the inverter, load inertia P24, A38, b38, and r38 are used. If 0.000 is set, it is handled as 0.200.

Double key operation (STOP key + ▲/▼ keys) is required to change function code H00 data.

H00 data	Function
0	Normal operation
1	Simulated operation

Motor operating time, and startup count, etc. are not added during simulated operation. The operating time for capacitors and cooling fans, etc. is added when the inverter power is ON.

FUNCTION
F Codes
E Codes
C Codes
P Codes
H Codes
A Codes
b Codes
r Codes
J Codes
d Codes
U Codes
y Codes
K Codes

H02, H03	Data initialization (Method, Target) Related function codes: H193, H194 User preference dataset (Save, Protect)

Returns function code data to the factory default settings. The motor parameters are also initialized.
To change the H02/ H03 data, it is necessary to press the (STOP) + (▲)/(▼) keys (simultaneous keying).

H03 data	Function
0	Disable initialization (Settings manually made by the user will be retained.)
1	Initialize all function codes (initialization in accordance with function code H02 setting)
2	Initialize motor 1 parameters in accordance with F42 (Drive control selection 1), P02 (Rated capacity) and P99 (Motor 1 selection)
3	Initialize motor 2 parameters in accordance with F42 (Drive control selection 2), A16 (Rated capacity) and A39 (Motor 2 selection)
4	Initialize motor 3 parameters in accordance with F42 (Drive control selection 1), b16 (Rated capacity) and b39 (Motor 1 selection)
5	Initialize motor 4 parameters in accordance with F42 (Drive control selection 2), r16 (Rated capacity) and r39 (Motor 2 selection)
11	Limited initialization (initialization other than communications function codes): Communication can be continued after initialization.
12	Limited initialization (initialization of customizable logic function U codes only)
13	Favorites clear

- When all function codes are initialized, select the initialization method in advance with function code H02.

H02 selection		Initialization method when 1 is set to H03
Data=0	Fuji standard initial value	Initialize all function codes with the Fuji Electric standard factory defaults.
Data=1	User preference dataset	Initialize the value with the user setting value saved by H194. If the user preference dataset is not saved, initialize it with Fuji standard initial value (H02=0).

📖 For saving the user preference dataset, refer to items in function codes H193 and H194.

- To initialize the motor parameters, set the related function codes as follows.

Step	Item	Content	Function code			
			Motor 1	Motor 2	Motor 3	Motor 4
(1)	Motor type	Selects the motor type.	P99	A39	b39	r39
(2)	Motor capacity	Sets the capacity (kW).	P02	A16	b16	r16
(3)	Data initialization	Initialize motor parameters	H03 = 2	H03 = 3	H03 = 4	H03 = 5

- When initialization is complete, the function code H03 data returns to "0".
- If P02/A16/b16/r16 data is set to a value other than the standard nominal applied motor rating, data initialization with H03 internally converts the specified value parameters values to the standard nominal applied motor rating. (See Chapter 5 Table 5.2-2 Motor constants.)

- Motor parameters to be initialized are for motors listed below under V/f control. When the base frequency, rated voltage, and the number of poles are different from those of the listed motors, or when non-Fuji motors or non-standard motors are used, change the rated current data to that printed on the motor nameplate.

Motor selection P99/A39/b39/r39		V/f setting
Data = 0, 3, or 4	Fuji standard motor 8-series, other	4 poles, 200 V/50 Hz, 400 V/50 Hz
Data = 1	HP rating motors	4 poles, 230 V/60 Hz, 460 V/60 Hz
Data = 2	Fuji dedicated motors for vector control	4 poles, individual
Data = 5	Fuji premium efficiency motors	4 poles, 200 V/50 Hz, 400 V/50 Hz
Data = 20	Other, synchronous motors	6 poles, individual
Data: 21 to 23	Fuji synchronous motors	6 poles, individual

Data can only be set to 20 to 23 with P99.

Note By changing P02 with the keypad, take into account that the P02 data automatically updates data of P03, P05 to P23, P30, P40 to P90, and H46. Similarly, when accessing function code A16/b16/r16 for motor 2 to 4, data of related function codes for each are automatically updated.

The function codes initialized by performing motor constant initialization are as follows.

Motor selection	Motor 1	Motor 2	Motor 3	Motor 4
Data: 0, 1, 3 to 5 20 to 23	F09, F11, P01, P03, P05 to P23, P30, P40 to P90, H46, d90	A05, A07, A15, A17, A19 to A37, A53 to A56	b05, b07, b15, b17, b19 to b37, b53 to b56	r05, r07, r15, r17, r19 to r37, r53 to r56
Data: 2	The above function codes + F04, F05	The above function codes + A02, A03	The above function codes + b02, b03	The above function codes + r02, r03

FUNCTION
F Codes
E Codes
C Codes
P Codes
H Codes
A Codes
b Codes
r Codes
J Codes
d Codes
U Codes
y Codes
K Codes

H193, H194	User preference dataset (save, protection) Related function codes: Initialization of H02 and H03 data (initial value selection and target)

The value can be saved in the non-volatile memory in the inverter so that customers may use the setting value changed from the Fuji Electric standard factory default value as the initial value for inverter initialization.

The setting value saved and protected here can be selected as the user preference dataset for initialization with function code H03. When this function is used, set H02 data=1.

If initialization is performed without saved/protected setting data, it is initialized to the Fuji Electric standard factory default regardless of the H02 value.

For data initialization, refer to function codes H02 and H03.

To change the data of function codes H02, H193 and H194, it is necessary to operate double keys " STOP key + ▲ /▼key".

To save the user setting value, set 1 (saved as the user preference dataset) to function code H02 in advance. In addition, function code H194 must be set to 0 (save enable).

H02 data	H194 data	Function when 1 is set to H193
0	Optional	User setting value is not saved.
1	0: Save enable	User setting value is saved.
	1: Protected (save disable)	User setting value is not saved.

User preference dataset save procedures

(1) Set all function codes and determine the user setting value for initialization.
(2) Set H02=1 and H194=0.
(3) Set H193=1. The user setting value is saved.
(4) Set H194=1. The user setting value is protected.

Note When the setting value of the function code has already saved by H193 and the step of H193 is repeated again, the saved data is overwritten. Be careful for error operation. To prevent overwriting by error, it is recommended to protect the data with H194 data=1 after saving.

H04, H05	Auto-reset (Times and reset interval)

H04 and H05 specify the auto-reset function that makes the inverter automatically attempt to reset the tripped state and restart without issuing an alarm output (for any alarm) even if any protective function subject to reset is activated and the inverter enters the forced-to-stop state (tripped state). If the protective function is activated in excess of the times specified by H04, the inverter will issue an alarm output (for any alarm) and not attempt to auto-reset the tripped state.

Listed below are the protective functions subject to auto-reset.

Protective function	LED monitor displays:	Protective function	LED monitor displays:
Overcurrent protection	OC1, OC2, OC3	Breaking resistor overheat	dbH
Overvoltage protection	OU1, OU2, OU3	Motor overload	OL1 to OL4
Cooling fin overheat	OH1	Inverter overload	OLU
Inverter internal overheat	OH3	Step-out/magnetic pole position detection failure	Erd
Motor overheat	OH4	Charging resistor overheat	OH6

With ROM0500 or later, protective functions subject to retry can be selected with function codes H105 and H106.

■ Number of reset times (H04)

H04 specifies the number of reset times for the inverter to automatically attempt to escape the tripped state. When H04 = 0, the auto-reset function will not be activated.

- Data setting range: 0 (Disable), 1 to 20 (times)

⚠CAUTION

If the inverter stops due to a trip by selecting the retry function, it may automatically restart, and the motor may rotate depending on the cause of the trip. Design machines in such a way as to ensure the safety of the human body and surrounding area even when operation is resumed.

Failure to observe this could result in an accident.

■ Reset interval (H05)

- Data setting range: 0.5 to 20.0 (s)

H05 specifies the reset interval time between the time when the inverter enters the tripped state and the time when it issues the reset command to attempt to auto-reset the state. Refer to “Operation timing scheme” below.

<Operation timing scheme>

- In the figure below, normal operation restarts in the 4-th retry.

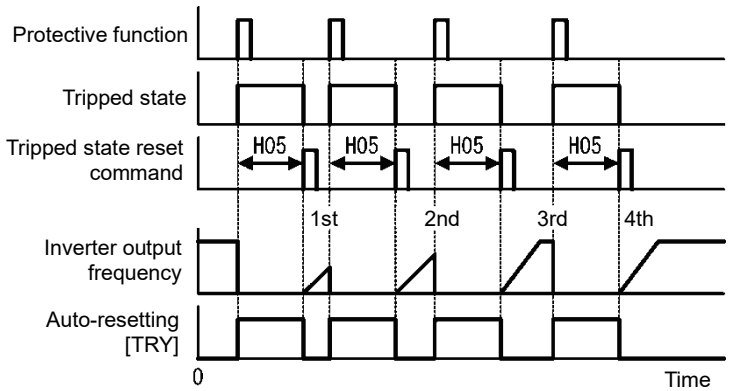

FUNCTION
F Codes
E Codes
C Codes
P Codes
H Codes
A Codes
b Codes
r Codes
J Codes
d Codes
U Codes
y Codes
K Codes

- If the retry count exceeds 3 times (H04 = 3), and an integrated alarm is output

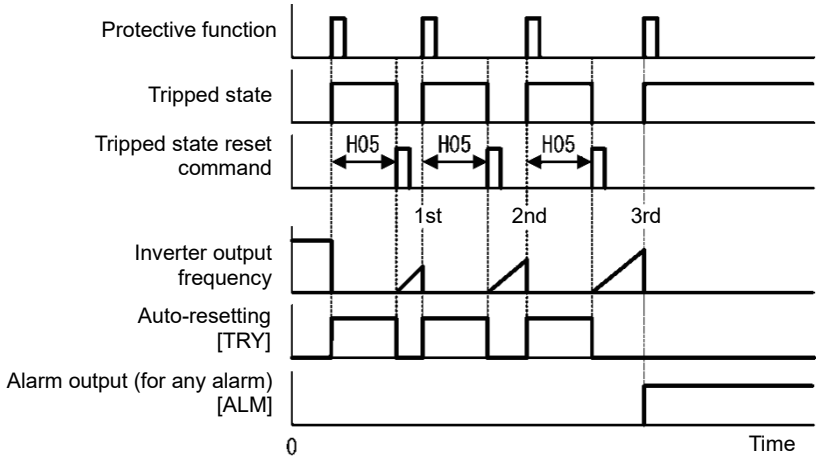

- The auto-reset operation can be monitored from the external equipment by assigning the digital output signal TRY to any of the programmable, output terminals [Y1] to [Y4], [Y5A/C] or [30A/B/C]. Set function code E20 to E24 or E27 to “26” (during “TRY” retry operation).

H06	Cooling fan ON-OFF control

To prolong the service life of the cooling fan and reduce fan noise during running, the cooling fan stops when the temperature inside the inverter drops below a certain level while the inverter stops.

H06 specifies whether to keep running the cooling fan all the time or to enable ON/OFF control.

H06 data	Function
0	Disable (normal operation)
1	Enable (ON/OFF controllable)

■ **Cooling fan ON-OFF control “FAN” assignment (Function code E20 to E24, E27 data = 25)**

With the cooling fan ON/OFF control enabled (H06 = 1), this output signal is ON when the cooling fan is in operation, and OFF when it is stopped. This signal can be used to make the cooling system of peripheral equipment interlocked for an ON/OFF control.

H07	Curve acceleration/ deceleration (Refer to F07)

Curve acceleration/deceleration settings are described in detail in the function code F07 section.

H08	Rotation direction restriction

H08 inhibits the motor from running in an unexpected rotational direction due to miss-operation of run commands, miss-polarization of frequency commands, or other mistakes.

H08 data	Function
0	Disable
1	Enable (reverse rotation inhibited)
2	Enable (Forward rotation inhibited)

Under sensorless vector control, the motor may rotate a little in the direction other than that specified due to an error in the estimated speed due to a motor constant error.

H09, d67	Starting characteristic (Auto search mode) Related function codes: H49 (Starting mode, auto search delay time 1) H46 (Starting mode, auto search delay time 2)

Specify the mode for auto search without stopping the idling motor. The mode can be specified for each restart after momentary power failure and each start of normal operation. The starting mode can be switched by assigning “STM” to a general-purpose digital input signal. If it is not assigned, “STM” is regarded to be OFF. (Data = 26)

■ **H09/d67 (Starting mode, auto search) and terminal command “STM” (“Enable auto search for idling motor speed at starting”)**

The combination of starting characteristics H09 and d67 data and the “STM” signal determines whether to perform the auto search when starting.

Function code	Drive control	Remarks
H09	V/f control (F42 = 0 to 2)	
d67	Sensorless vector control (F42 = 5, 15)	

H09/d67 data	Starting characteristic selection “STM”	Starting characteristic	
		Restart mode after momentary power failure (F14 = 3 to 5)	For normal startup
0: Disable	OFF	Auto search disable	Auto search disable
1: Enable	OFF	Auto search enable	Auto search disable
2: Enable	OFF	Auto search enable	Auto search enable
-	ON	Auto search enable	Auto search enable

When “STM” is ON, auto search for idling motor speed at starting is enabled regardless of the H09 setting.
(📖 Function codes E01 to E09 data = 26)

By setting 15 for F42, it is automatically set to 2: This is set to enable (At normal start and at restart after momentary power failure).

Auto search for idling motor speed to follow

Starting the inverter (with a run command ON, BX OFF, auto-reset, etc.) with STM being ON searches for the idling motor speed for a maximum of 1.2 seconds to run the idling motor without stopping it. After completion of the auto search, the inverter accelerates the motor up to the reference frequency according to the frequency command and the preset acceleration time.

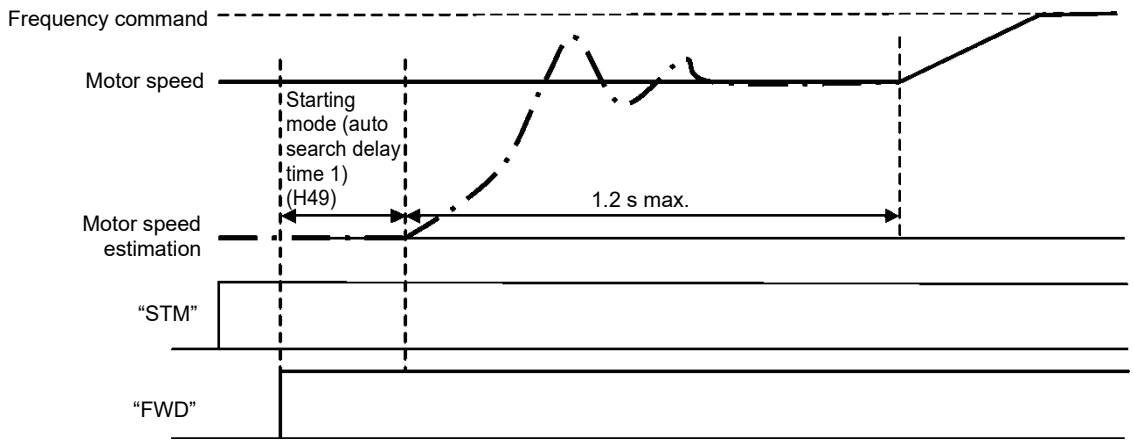

FUNCTION
F Codes
E Codes
C Codes
P Codes
H Codes
A Codes
b Codes
r Codes
J Codes
d Codes
U Codes
y Codes
K Codes

■ Starting mode (auto search delay time 1) (H49)

- Data setting range: 0.0 to 10.0 (s)

Auto search may fail if there is any motor residual voltage.
If so, it is necessary to secure the time until residual voltage runs out.

When operation is started by turning a run command ON, auto search is started after the period specified with the starting mode (auto search delay time 1) (H49) has elapsed. When switching between two inverters for controlling one motor and if the motor is coasting to stop at the time of switching to start by auto search, by specifying H49 eliminates the need for timing the run command.

■ Starting mode (auto search delay time 2) (H46)

- Data setting range: 0.1 to 20.0 (s)

At the restart after a momentary power failure, at the start by turning the terminal command “BX” (“Coast to a stop”) OFF and ON, or at the restart by auto-reset, the inverter applies the delay time specified by H46. Even if starting conditions are satisfied, the inverter does not start unless auto-search delay time elapses after inverter goes into OFF state. The inverter starts after elapse of auto search delay time.

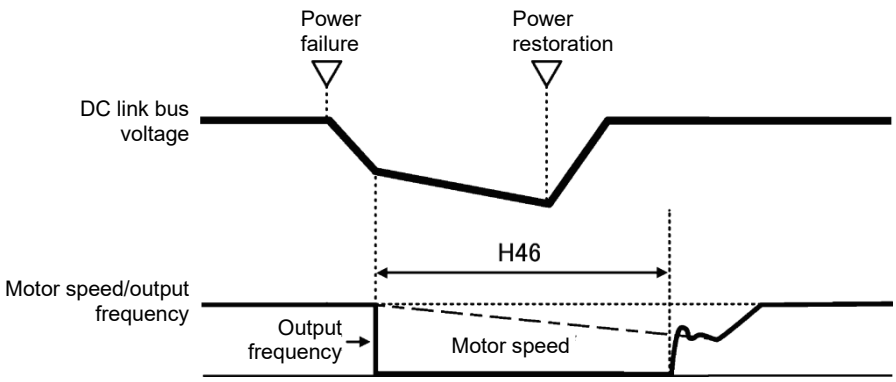

Under auto search control, the inverter searches the motor speed with the voltage applied at the motor start and the current flowing in the motor, based on the model built with the motor parameters. Therefore, the search is greatly influenced by the residual voltage in the motor.

H46 is available for motor 1 only. At factory shipment, H46 data is preset to a correct value according to the motor capacity for the general-purpose motor, and basically there is no need to modify the data.

Depending on the motor characteristics, however, it may take time for residual voltage to disappear (due to the secondary thermal time constant of the motor). In such a case, the inverter starts the motor with the residual voltage remaining, which will cause an error in the speed search and may result in occurrence of an inrush current or an overvoltage alarm.

If it happens, increase the value of H46 data and remove the influence of residual voltage.
(If possible, it is recommended to set the value around two times as large as the factory default value allowing a margin.)

Note
- Be sure to auto-tune the inverter preceding the start of auto search for the idling motor speed.
- When the estimated speed exceeds the maximum output frequency or the upper limit frequency, the inverter disables auto search and starts running the motor with the maximum output frequency or the upper limit frequency, whichever is lower.
- During auto search, if an overcurrent or overvoltage trip occurs, the inverter restarts the suspended auto search.
- If the inverter starts when the motor is idling with auto search disabled, an OC, etc. may occur, and the inverter may be unable to start.

Note Note that auto search may not fully provide the performance depending on load conditions, motor parameters, wiring length, and other external factors.

H11	Deceleration mode

H11 specifies the deceleration mode to be applied when a run command is turned OFF.

H11 data	Enable
0	Normal deceleration
1	The inverter immediately shuts down its output, so the motor stops according to the inertia of the motor and machinery (load) and their kinetic energy losses.

Note When reducing the reference frequency, the inverter decelerates the motor according to the deceleration commands even if H11 = 1 (Coast to stop).

H12	Instantaneous overcurrent limiting (Mode selection) (Refer to F43)

Refer to function code F43 and F44 sections for details on the instantaneous overcurrent limit (operation selection).

H13, H14 H15, H16	Restart mode after momentary power failure (Restart time, frequency fall rate) Restart mode after momentary power failure (Continue to run level, allowable momentary power failure time) (Refer to F14)

For how to set these function codes (Restart time, Frequency fall rate, Continue to run level and Allowable momentary power failure time), refer to the description of function code F14.

FUNCTION
F Codes
E Codes
C Codes
P Codes
H Codes
A Codes
b Codes
r Codes
J Codes
d Codes
U Codes
y Codes
K Codes

H18	Torque control (Mode selection) Related function codes: F40, F41 (Torque limit 1-1, 1-2) d32, d33 (Speed limits / Over speed level 1 and 2)

When vector control (sensorless, with speed sensor) is selected, the inverter can control the motor-generating torque according to a torque command sent from external sources. Under torque control, the speed is automatically calculated based on the torque command, and output from the inverter.

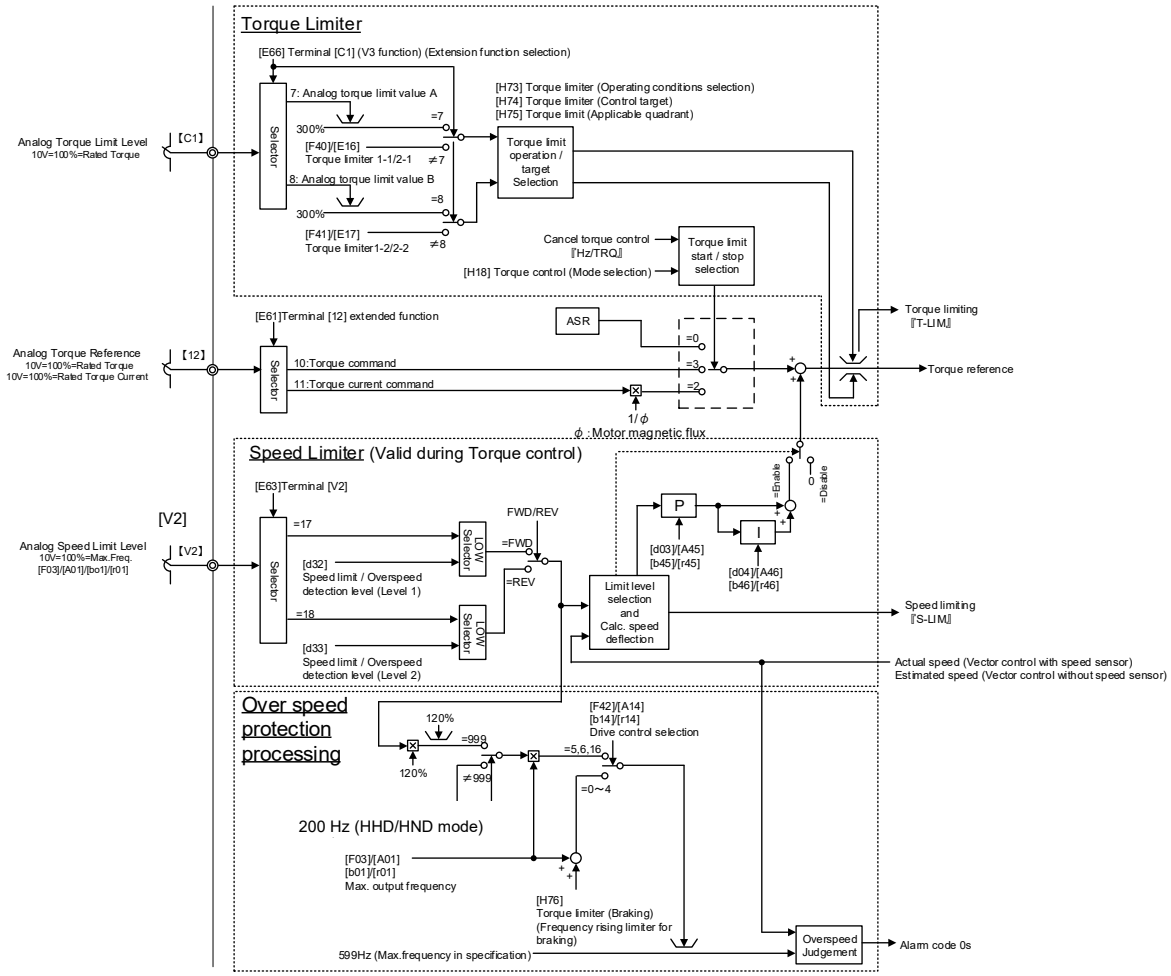

Block diagram of torque control

The following functions are disabled during torque control.
Speed control based on speed command, auto energy-saving operation, jogging operation, DC braking, Condensation prevention, PID control, servo lock, droop, pattern operation, overload prevention control, anti-regenerative control, brake signals

■ Torque control (Operation selection) (H18)

H18 specifies whether to enable or disable the torque control. Enabling the torque control offers two choices: with torque current command and with torque command.

H18 data	Available control
0	Disable (Speed control)
2	Enable (Torque control with torque current command)
3	Enable (Torque control with torque command)

■ **Torque command**

Torque commands can be given as analog voltage input (via terminals [12] and [C1](V2 function)) or analog current input (via terminal [C1](C1 function)), or via the communications link (communication-dedicated function codes S02 and S03). To use analog voltage/current inputs, it is necessary to set E61 (for terminal [12]), E62 (for terminal [C1] (C1 function)), E63 (for terminal [V2]), or E66 (for terminal [C1] (V3 function)) data to “10” or “11.”

Input	Command form	Function code setting	Specification
Terminal [12] (-10 V to 10 V)	Torque command	E61 = 10	Motor rated torque: ±100% / ±10 V
	Torque current command	E61 = 11	Motor rated torque current: 100% / ±10 V
Terminal [V2] (-10 V to 10 V)	Torque command	E63 = 10	Motor rated torque: ±100% / ±10 V
	Torque current command	E63 = 11	Motor rated torque current: 100% / ±10 V
Terminal [C1] (C1 function) (4 to 20 mA)	Torque command	E62 = 10	Motor rated torque: 100% / 20 mA
	Torque current command	E62 = 11	Motor rated torque current: 100% / 20 mA
Terminal [C1] (V3 function) (-10 V to 10 V)	Torque command	E66 = 10	Motor rated torque: ±100% / ±10 V
	Torque current command	E66 = 11	Motor rated torque current: 100% / ±10 V
S02 (-327.68 to 327.67 %)	Torque command	—	Motor rated torque: ±100.00% / ±10000
S03 (-327.68 to 327.67 %)	Torque current command	—	Motor rated torque current: ±100.00% / ±10000

■ **Cancel torque control “Hz/TRQ” (E01 to E09, data = 23)**

When torque control is enabled (H18 = 2 or 3), assigning the terminal command “Hz/TRQ” (Cancel torque control) to any of the general-purpose digital input terminals (data = 23) enables switching between speed control and torque control.

Cancel torque control signal “Hz/TRQ”	Enable
ON	Cancel torque control (Enable speed control)
OFF	Enable torque control

FUNCTION
F Codes
E Codes
C Codes
P Codes
H Codes
A Codes
b Codes
r Codes
J Codes
d Codes
U Codes
y Codes
K Codes

■ Speed limits 1 and 2 (d32, d33)

Torque control mode controls the motor-generating torque directly, not the speed. The speed is determined secondarily by torque of the load, inertia of the machinery, and other factors. To prevent a dangerous situation, therefore, the speed limit functions (d32 and d33) are provided inside the inverter.

The speed limit levels can be set to forward or reverse individually.

- Forward speed limit level = Maximum output frequency (F03/A01/b01/r01) x Speed limit 1 (d32) (%)
- Reverse speed limit level = Maximum output frequency (F03/A01/b01/r01) x Speed limit 2 (d33) (%)

Note If switching between torque control and speed control, ensure that d35 ≠ 999. If the overspeed level is not set, set to 120%. If d35 = 999, the overspeed level setting will be 1 or 2 under speed control, and an overspeed OS will occur at 120% of the level set at d32 and d33.

■ Speed limiting "S-LIM" (E20 to E24, E27, data = 131)

If the motor speed reaches the speed limit value during torque control (H18 = 2, 3), "S-LIM" will turn ON during speed limiting. Speed limiting (when H18 ≠ 2 or 3, or when torque control cancel signal "Hz/TRQ" = ON) will be disabled (OFF).

■ Analog speed limit value (E61, E62, E63, and E66)

You can also enter from the analog input the speed limit value. Refer to E61, E62, E63, and E66 for details.

- Forward speed limit level = Maximum output frequency (F03/A01/b01/r01) x FWD speed limit value (analog input) (%)
- Reverse speed limit level = Maximum output frequency (F03/A01/b01/r01) x REV speed limit value (analog input) (%)

■ Over speed detection level (120% of the specified speed limit levels)

If a regenerative load (which is not generated usually) is generated under droop control or function codes are incorrectly configured, then the motor may rotate at an unintended high speed. To protect the machinery, it is possible to specify the overspeed level with d32 and d33 as follows.

- Forward overspeed detection level = Maximum output frequency (F03/A01/b01/r01) x Speed limit 1 (d32) x 120 (%)
- Reverse overspeed detection level = Maximum output frequency (F03/A01/b01/r01) x Speed limit 2 (d33) x 120 (%)

When performing speed control, d32 and d33 are used as the overspeed (OS) detection level for the forward rotation side and reverse rotation side, respectively. If switching between torque control and speed control, use d35 if an overspeed protection alarm (OS) occurs.

Note **Running/stopping the motor**

Under torque control, the inverter does not control the speed, so it does not perform acceleration or deceleration by soft-start and stop (acceleration/deceleration time) at the time of startup and stop. Turning ON a run command starts the inverter to run and output the commanded torque. Turning it OFF stops the inverter so that the motor coasts to a stop.

When starting torque control under sensorless vector control, the starting operation will differ depending on whether function code (d67) auto search is enabled or disabled.

d67 data	Enable
0: Disable 1: Enable (Only at restart after momentary power failure)	When starting up, the motor starts from zero frequency. Acceleration starts based on the torque command. When starting up, be sure to use with an application that involves the motor stopping.
2: Enable (At normal start and at restart after momentary power failure)	When starting up, auto search is performed and after finding the motor as it rotates, torque control begins.

H26, A66 b66, r66	**Thermistor (for motor) (Operation selection)**
H27, A67 67, r67	**Thermistor (for motor) (Operation level)**

These function codes specify the PTC (Positive Temperature Coefficient) thermistor embedded in the motor. The thermistor is used to protect the motor from overheating or output an alarm signal. If switching the motor, set the A, b, or r function code corresponding to the motor to be selected.

■ Thermistor (Operation selection) (H26 (A66, b66, r66))

H26 selects the function operation mode (protection or alarm) for the PTC thermistor as shown below.

H26, A66, b66, r66 data	Enable
0	Disable
1	When the voltage sensed by PTC thermistor exceeds the detection level, motor protective function (alarm OH4) is triggered, causing the inverter to enter an alarm stop state.
2	When the voltage sensed by the PTC thermistor exceeds the detection level, a motor alarm signal is output but the inverter continues running. You need to assign the “Motor overheat detected by thermistor” signal (“THM”) to one of the digital output terminals beforehand, by which a temperature alarm condition is indicated to the peripheral equipment (E20 to E24 and E27, data = 56).
3	Set if connecting the NTC thermistor built into dedicated Fuji motors for vector control (VG motor). This is used to detect the motor temperature and for control. Furthermore, motor protection (alarm OH4) is triggered when the motor overheats and exceeds the protection level, and the inverter stops due to the alarm.
100 (A66, b66, r66 only)	Based on H26 If the PTC thermistor is selected by setting H26 to 1 or 2, the PTC thermistor detection voltage is also monitored when motor 2 to 4 is selected to provide protection. When the NTC thermistor (H26 = 3) is selected, only motor 1 runs, and motors 2 to 4 are disabled.

If using a thermistor for motor 2 to 4, operation function codes should be set individually for motor 2 (A66), motor 3 (b66), and motor 4 (r66). However, operation will be as follows if the A66, b66, and r66 factory defaults (data 100: based on H26) are set.

FUNCTION
F Codes
E Codes
C Codes
P Codes
H Codes
A Codes
b Codes
r Codes
J Codes
d Codes
U Codes
y Codes
K Codes

■ Thermistor (for motor) (level) (H27)

H27 specifies the detection level (expressed in voltage) for the temperature sensed by the PTC thermistor.

- Data setting range: 0.00 to 5.00 (V)

The alarm temperature at which the overheat protection becomes activated depends on the characteristics of the PTC thermistor. The internal resistance of the thermistor will significantly change at the alarm temperature. The detection level (voltage) is specified based on the change of the internal resistance.

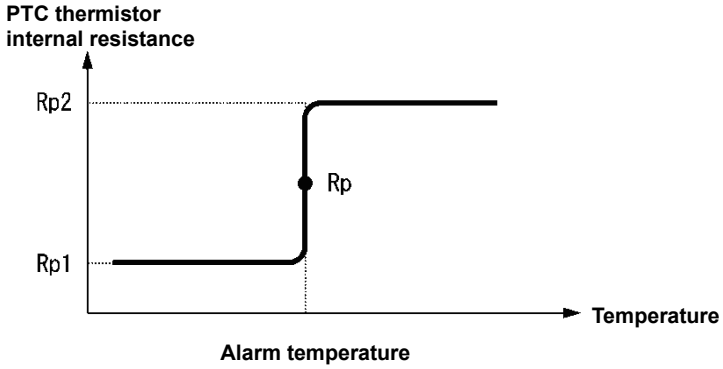

Suppose that the internal resistance of the PTC thermistor at the alarm temperature is Rp, the detection level (voltage) Vv2 is calculated by the expression below. Set the value of Vv2 to function code H27.

$$V_{V2} = \frac{Rp}{27000 + Rp} \times 10.5\ (V)$$

Connect the PTC/NTC thermistor as shown below. The voltage obtained by dividing the input voltage on terminal [V2] with a set of internal resistors is compared with the detection level voltage specified by H27.

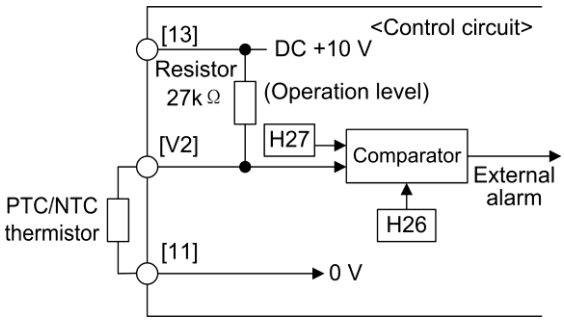

Note When using the terminal [V2] for PTC/NTC thermistor input, it is necessary to change wth switch (SW5) on the control PCB. Refer to Chapter 2 “2.2.7 Switching switches”. for details.

H28	Droop control

In a system in which two or more motors drive single machinery, any speed gap between inverter-driven motors results in some load unbalance between motors. Droop control allows each inverter to drive the motor with the speed droop characteristic for increasing its load, eliminating such kind of load unbalance. This function is disabled while the starting frequency is maintained, and during deceleration.

- Data setting range: -60.0 to 0.0 (Hz), (0.0: Disable)

Tip The approximate rated slip frequency for the applicable motor should be used for the H28 setting value as a guide.

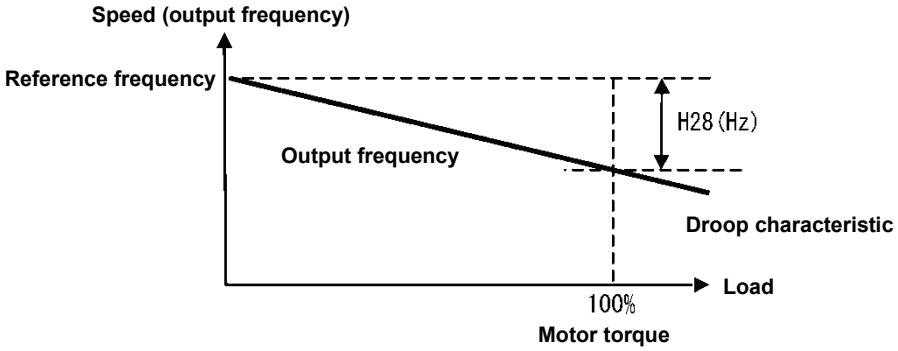

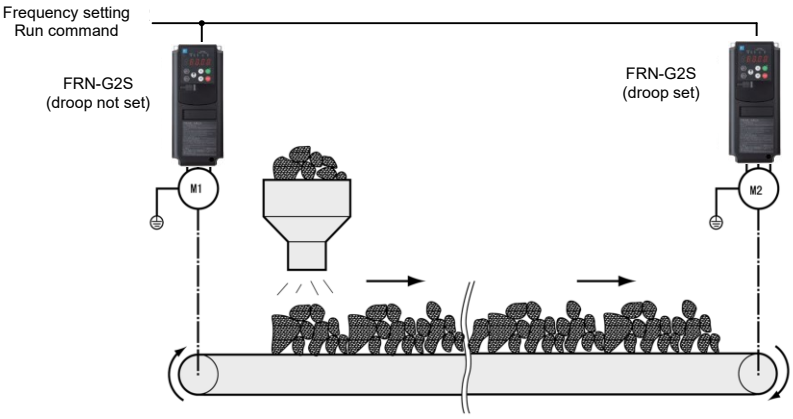

■ **Select droop "DROOP" (Function code E01 to E09, data = 76)**

The terminal command "DROOP" toggles droop control on and off.

Terminal command "DROOP"	Droop control
ON	Enable
OFF	Disable

Note To use droop control, be sure to auto-tune the inverter for the motor.

Under V/f control, to prevent the inverter from tripping even at an abrupt change in load, droop control applies the acceleration/deceleration time to the frequency obtained as a result of droop control. This may delay reflection of the frequency compensated during droop control on the motor speed, thereby running the inverter as if droop control is disabled. Under sensorless vector control and vector control with sensor, the inverter is equipped with a current control system, and does not trip even following an abrupt change in load, ensuring that acceleration and deceleration time are not affected. Consequently, load balance can be achieved with droop control even during acceleration and deceleration.

FUNCTION
F Codes
E Codes
C Codes
P Codes
H Codes
A Codes
b Codes
r Codes
J Codes
d Codes
U Codes
y Codes
K Codes

H30 H31	**Link function (Operation selection)** **Link function (Actual terminal operation selection)** **Related function codes: y94 bus function (Operation command source selection)** **y98 bus function (Operation selection)**

Using the RS-485 communications link, built-in CAN communications link or fieldbus (option) allows you to issue frequency settings and run operation commands (run stop/Digital input terminal or equivalent) from a computer or PLC at a remote location, as well as monitor the inverter running information and the function code data. It is possible to sets the source that specifies the frequency settings and run operation commands with H30, y94, and y98. H30 selects RS-485 communication, and y94 and y98 select the fieldbus setting procedure.

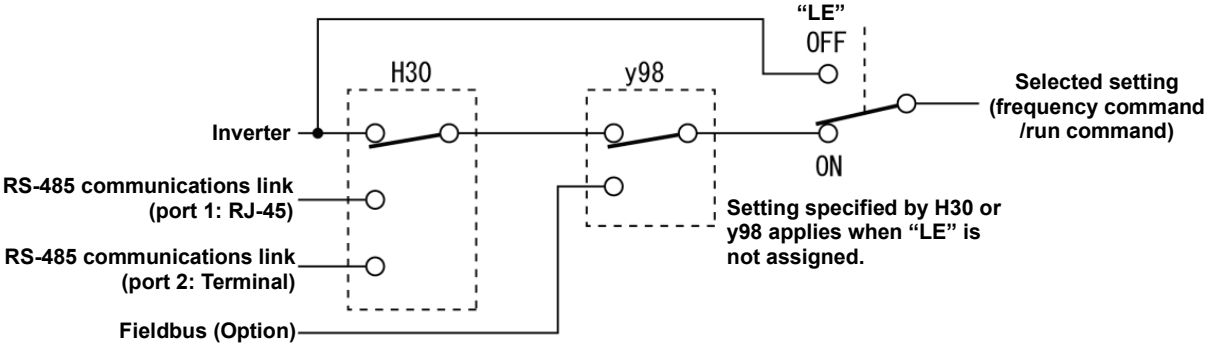

Command sources selectable

Command source	Content
Inverter itself	Sources except RS-485 communications link and fieldbus Frequency setting: Specified by F01/C30, or multistep frequency command Run operation command: Keypad, External signal (digital input) set at F02
Via RS-485 communications link (port 1)	Via RJ-45 connector for keypad connection
Via RS-485 communications link (port 2)	Via terminal block ([DX+], [DX-], [SD])
Via various types of field Bus cards (Option)	Via fieldbus (DeviceNet, PROFIBUS DP, etc.)

Command sources specified by H30 (Communications link function, Mode selection)

H30 data	Frequency setting	Run operation command:
0	Inverter itself (F01/C30)	Inverter itself (F02)
1	RS-485 communications link (port 1)	Inverter itself (F02)
2	Inverter itself (F01/C30)	RS-485 communications link (port 1)
3	RS-485 communications link (port 1)	RS-485 communications link (port 1)
4	RS-485 communications link (port 2)	Inverter itself (F02)
5	RS-485 communications link (port 2)	RS-485 communications link (port 1)
6	Inverter itself (F01/C30)	RS-485 communications link (port 2)
7	RS-485 communications link (port 1)	RS-485 communications link (port 2)
8	RS-485 communications link (port 2)	RS-485 communications link (port 2)

Command sources specified by y98 (Bus link function, Mode selection)

y98 data	Frequency setting	Run operation command:
0	Follow H30 data	Follow H30 data
1	Via fieldbus	Follow H30 data
2	Follow H30 data	Fieldbus *1
3	Via fieldbus	Fieldbus *1

*1 Of the run operation commands, if specifying run/stop commands ([FWD], [REV]) via actual terminals, and other digital input commands via a fieldbus, set F02 = 1 and y94 = 1.

H30 and y98 settings by combination of sources

		Frequency setting			
		Inverter itself	Via RS-485 communications link port 1	Via RS-485 communications link port 2	Via fieldbus (option)
Operation setting	Inverter itself	H30=0 y98=0	H30=1 y98=0	H30=4 y98=0	H30=0 (1, 4) y98=1
	Via RS-485 communications link (port 1)	H30=2 y98=0	H30=3 y98=0	H30=5 y98=0	H30=2 (3, 5) y98=1
	Via RS-485 communications link (port 2)	H30=6 y98=0	H30=7 y98=0	H30=8 y98=0	H30=6 (7, 8) y98=1
	Via various types of field Bus cards (Option)	H30=0 (2, 6) y98=2	H30=1 (3, 7) y98=2	H30=4 (5, 8) y98=2	H30=0 (1 to 8) y98=3

For details, refer to the RS-485 Communication User's Manual or the Various types of field Bus cards (Option) Instruction Manual.

- When the terminal command "LE" ("Select link operation (RS-485, BUS option)") is assigned to a digital input terminal, turning "LE" ON makes the settings of H30 and y98 enabled. (When disabled, those settings are disabled so that both frequency settings and run operation commands specified from the inverter itself take control.)

  (Function codes E01 to E09, data = 24)

  No LE assignment is functionally equivalent to the "LE" being ON.

FUNCTION
F Codes
E Codes
C Codes
P Codes
H Codes
A Codes
b Codes
r Codes
J Codes
d Codes
U Codes
y Codes
K Codes

■ H31: Link function (Actual terminal command operation selection)

By selecting RS-485 or fieldbus for the run command source with H30 or y98, the majority of digital input terminals on the inverter actual terminal block are disabled. By setting this function code to 1, digital input terminals with the link function and terminal [X1] to [X9] on the actual terminal block can be used together.

H31 data	Actual terminal command
0	Only some actual terminal commands are enabled when performing run command source communication.
1	All actual terminal commands are enabled when performing run command source communication.

The same operation is performed for the following digital input terminals, regardless of the function code setting. For digital input terminal functions other than those below, by setting 1 for this function code, use in combination with terminal [X1] to [X9] on the actual terminal block is also possible. Refer to section 5.1 in the "RS-485 Communication User's Manual" for details.

Terminal command assigned No.	Run command Symbol	Name	Command via communications link	Command from actual terminal
24	"LE"	Link operation selection	Disable	Enable
35	"LOC"	Local (TP) command selection	Disable	Enable
48	"PIN"	Pulse train input	Disable	Enable
94	"FJOG”	Jogging forward rotation/stop command	Enable	Disable
95	"RJOG”	Jogging reverse rotation/stop command	Enable	Disable
98	"FWD”	Forward rotation/stop command	Enable	Disable
99	"REV”	Reverse rotation/stop command	Enable	Disable
111	"STOP-T"	STOP-T terminal	Disable	Enable

■ y94: Bus function (Operation command source selection)

Bus command enable/disable is selected all at once with a run operation command (operation stop/digital input) with y98 and H30, but if setting operation stop ([FWD], [REV]) to commands with actual terminals, set F02 = 1 and y94 = 1.

H42, H43, H48	**Capacitance of DC link bus capacitor, Cumulative run time of cooling fan Cumulative run time of capacitors on printed circuit boards** **Related function codes: H47 Initial capacitance of DC link bus capacitor** **H98 Protection/maintenance function** **Related function code: H81 Warning selection 1**

■ **Life prediction function**

The inverter has the life prediction function for some parts which measures the discharging time or counts the voltage applied time, etc. The function allows you to monitor the current lifetime state on the LED monitor and judge whether those parts are approaching the end of their service life. The life prediction function can also issue early warning signals if the lifetime alarm command LIFE is assigned to any of the digital output terminals by any of E20 to E24 and E27. By assigning warnings with H81, L iF appears on the keypad, and warning "L-ALM" is output to notify the user.

The predicted values should be used only as a guide since the actual service life is influenced by the surrounding temperature and other usage environments.

Object of life prediction	Prediction function	End-of-life criteria	Inspection interval	On the LED monitor
DC link bus capacitor	Calculating the capacitance of DC link bus capacitor Measures the discharging time of the DC link bus capacitor when the main power is shut down and calculates the capacitance.	85% or lower than initial capacitance at time of shipping (See "[1] Measuring the capacitance of DC link bus capacitor in comparison with initial one at shipment".)	At periodic inspection H98 bit3 = 0	5.05 (Rated capacity)
		85 % or lower of the reference capacitance under ordinary operating conditions at the user site (See "[2] Measuring the capacitance of DC link bus capacitor under ordinary operating conditions at power shutdown".)	During ordinary operation H98 bit3 = 1	5.05 (Rated capacity)
	ON-time counting of DC link bus capacitor Counts the time elapsed when the voltage is applied to the DC link bus capacitor, while correcting it according to the capacitance measured above.	When 87,600 hours (10 years) of operation has been exceeded	During ordinary operation	5.26 (Elapsed time) 5.27 (Remaining hours)
Electrolytic capacitors on printed circuit boards	Counts the time elapsed when the voltage is applied to the capacitors, while correcting it according to the surrounding temperature.	When 87,600 hours (10 years) of operation has been exceeded	During ordinary operation	5.06 (Cumulative run time)
Cooling fans	Counts the run time of the cooling fans.	When 87,600 hours (10 years) of operation has been exceeded	During ordinary operation	5.07 (Cumulative run time)

FUNCTION
F Codes
E Codes
C Codes
P Codes
H Codes
A Codes
b Codes
r Codes
J Codes
d Codes
U Codes
y Codes
K Codes

■ Capacitance of DC link bus capacitor (H42)

Calculating the capacitance of DC link bus capacitor

- The discharging time of the DC link bus capacitor depends largely on the inverter's internal load conditions, e.g. options attached or ON/OFF of digital I/O signals. If actual load conditions are so different from the ones at which the initial/reference capacitance is measured that the measurement result falls out of the accuracy level required, then the inverter does not perform measuring.

- The capacitance measuring conditions at shipment are extremely restricted, e.g., all input terminals being OFF in order to stabilize the load and measure the capacitance accurately. Those conditions are, therefore, different from the actual operating conditions in almost all cases. If the actual operating conditions are the same as those at shipment, shutting down the inverter power automatically measures the discharging time; however, if they are different, no automatic measurement is performed. To perform it, put those conditions back to the factory default ones and shut down the inverter. For the reference capacitance setup procedure, see "[1] Measuring the capacitance of DC link bus capacitor in comparison with initial one at shipment".

- To measure the capacitance of the DC link bus capacitor under ordinary operating conditions when the power is turned OFF, it is necessary to set up the load conditions for ordinary operation and measure the reference capacitance (initial setting) when the inverter is introduced. For the reference capacitance setup procedure, see "[2] Measuring the capacitance of DC link bus capacitor under ordinary operating conditions at power shutdown".

  Setting bit 3 of H98 data to 0 restores the inverter to the measurement in comparison with the initial capacitance measured at shipment.

Note When the inverter uses an auxiliary control power input, the load conditions widely differ so that the discharging time cannot be accurately measured. In this case, measuring of the discharging time can be disabled with the function code H98 (Bit 4 = 0) for preventing unintended measuring. (For details, refer to H98.)

ON-time counting of DC link bus capacitor

- In a machine system where the inverter main power is rarely shut down, the inverter does not measure the discharging time. For such an inverter, the ON-time counting is provided. If the capacitance measurement is made, the inverter corrects the ON-time according to the capacitance measured. The ON-time counting result can be represented as "elapsed time" and "remaining time" before the end of life.

[1] Measuring the capacitance of DC link bus capacitor in comparison with initial one at shipment

When bit 3 of H98 data is 0, the measuring procedure given below measures the capacitance of DC link bus capacitor in comparison with initial one at shipment when the power is turned OFF. The measuring result can be displayed on the keypad as a ratio (%) to the initial capacitance.

----------Capacitance measuring procedure----------

1) To ensure validity in the comparative measurement, put the condition of the inverter back to the state at factory shipment.
   - Remove the option card (if already in use) from the inverter.
   - In case another inverter is connected via the DC link bus to the [P(+)] and [N(-)] terminals of the main circuit, disconnect the wires. It is not required to disconnect the DC reactor (optional), if any.
   - Disconnect power wires for the auxiliary input to the control circuit ([R0], [T0]).
   - If the standard keypad has been replaced with multi-function keypad TP-A2SW after purchasing the inverter, return to the standard keypad.
   - Turn OFF all the digital input signals fed to terminals ([FWD], [REV], and [X1] to [X9]) of the control circuit.
   - If a potentiometer is connected to terminal [13], disconnect it.
   - If an external apparatus is attached to terminal [PLC], disconnect it.
   - Ensure that transistor output signals ([Y1] to [Y4]) and relay output signals ([30A/B/C], [Y5A/C]) will not be turned ON.
   - Disable the RS-485 and built-in CAN communications links.

     Note If negative logic is specified for the transistor output and relay output signals, they are considered ON when the inverter is not running. Specify positive logic for them.

   - Keep the surrounding temperature within 25 ±10 °C.
2) Turn ON the main circuit power.
3) Confirm that the cooling fan is rotating and the inverter is in stopped state.
4) Turn OFF the main circuit power.
5) The inverter automatically starts the measurement of the capacitance of the DC link bus capacitor. Make sure that “. . . . ” appears on the LED monitor.

   Note If “. . . . ” does not appear on the LED monitor, the measurement has not started. Check the conditions listed in 1).

6) After “. . . . ” has disappeared from the LED monitor, turn ON the main circuit power again.
7) Select Menu #5 “Maintenance Information” in Programming mode and note the reading (relative capacitance (%) of the DC link bus capacitor).

FUNCTION
F Codes
E Codes
C Codes
P Codes
H Codes
A Codes
b Codes
r Codes
J Codes
d Codes
U Codes
y Codes
K Codes

[2] Measuring the capacitance of DC link bus capacitor under ordinary operating conditions at power shutdown

When bit 3 of H98 data is 1, the inverter automatically measures the capacitance of the DC link bus capacitor under ordinary operating conditions when the power is turned OFF. This measurement requires setting up the load conditions for ordinary operation and measuring the reference capacitance when the inverter is introduced to the practical operation, using the setup procedure given below.

Function code	Name	Content
H42	Capacitance of DC link bus capacitor	• Capacitance of DC link bus capacitor (measured value) • Start of initial capacitance measuring mode under ordinary operating conditions (0) • Measurement failure (1)
H47	Initial capacitance of DC link bus capacitor	• Initial capacitance of DC link bus capacitor (measured value) • Start of initial capacitance measuring mode under ordinary operating conditions (0) • Measurement failure (1)

When replacing parts, clear or modify the H42 and H47 data. For details, refer to the maintenance related documents.

----------Reference capacitance setup procedure----------

1) Set function code H98 (Protection/maintenance function) to enable the user to specify the judgment criteria for the service life of the DC link bus capacitor (Bit 3 = 1) (refer to function code H98).

2) Turn OFF all run commands.

3) Make the inverter ready to be turned OFF under ordinary operating conditions.

4) Set both function codes H42 (Capacitance of DC link bus capacitor) and H47 (Initial capacitance of DC link bus capacitor) to “0”.

5) Turn OFF the inverter, and the following operations are automatically performed.

   The inverter measures the discharging time of the DC link bus capacitor and saves the result in function code H47 (Initial capacitance of DC link bus capacitor).

   The conditions under which the measurement has been conducted will be automatically collected and saved.

   During the measurement, “ . . . . ” will appear on the LED monitor.

6) Turn ON the inverter again.

   Confirm that H42 (Capacitance of DC link bus capacitor) and H47 (Initial capacitance of DC link bus capacitor) hold right values. Shift to Menu #5 “Maintenance Information” and confirm that the relative capacitance (ratio to full capacitance) is 100 %.

Note If the measurement has failed, “1” is entered into both H42 and H47. Remove the factor of the failure and conduct the measurement again.

Hereafter, each time the inverter is turned OFF, it automatically measures the discharging time of the DC link bus capacitor if the above conditions are met. Periodically check the relative capacitance of the DC link bus capacitor (%) with Menu #5 “Maintenance Information” in Programming mode.

Note The condition given above tends to produce a rather large measurement error. If this mode gives you a lifetime alarm, set H98 (Protection/maintenance function) back to the default setting (Bit 3 (Select life judgment threshold of DC link bus capacitor) = 0) and conduct the measurement under the condition at the time of factory shipment.

■ **Cumulative run time of capacitors on printed circuit boards (H48)**

Function code	Name	Content
H48	Cumulative run time of capacitors on printed circuit boards	Displays the cumulative run time for the capacitor on the PCB . • Data setting range: 0 to 99990 hours (10 hour increments)

When replacing capacitors on printed circuit boards, clearing or modifying H48 data is required. For details, refer to the maintenance related documents.

■ **Cumulative run time of cooling fan (H43)**

Function code	Name	Content
H43	Cumulative run time of cooling fan	Displays the cumulative run time for the cooling fan. • Data setting range: 0 to 99990 hours (10 hour increments)

When replacing the cooling fan, clearing or modifying H43 data is required. For details, refer to the maintenance related documents.

H44	**Startup count 1** **Reference function code: H81 Warning selection 1**

Counts the number of inverter starts and displays it up to 65535 times. Check the displayed number on the maintenance screen of the keypad, and use it as a guide for maintenance timing for parts such as belts. To start the counting over again, e.g. after a belt replacement, set the H44 data to “0”. By assigning warnings with H81, and the count becomes zero, Cnt appears on the keypad, and warning “L-ALM” is output to notify the user.

H45	**Mock alarm** **Related function codes: H97 (Clear alarm data)**

H45 causes the inverter to generate a mock alarm in order to check whether external sequences function correctly at the time of machine setup. Setting the H45 data to “1” displays mock alarm Err on the LED monitor. It also issues alarm output (for any alarm) “ALM” (if assigned to a digital output terminal by any of E20 to E24, and E27).

Accessing the H45 data requires simultaneous keying of the STOP key + ▲ key. After that, the H45 data automatically reverts to “0,” allowing you to reset the alarm.

Same as other alarms that could occur when running the inverter, the inverter saves mock alarm data, enabling you to confirm the mock alarm status.

To clear the mock alarm data, use H97. (Accessing the H97 data requires simultaneous keying of the STOP key + ▲ key.) H97 data automatically returns to “0” after clearing the alarm data.

Tip A mock alarm can be issued also by simultaneous keying of the STOP key + FUNC/DATA key on the keypad for 5 seconds or more.

H46	**Starting mode (Auto search delay time 2)** **(Refer to H09)**

Refer to the function code H09 section for details on the starting characteristics (auto search wait time 2).

H47, H48	**Initial capacitance of DC link bus capacitor, Cumulative run time of capacitors on printed circuit boards** **(Refer to H42)**

For details, refer to the description of H42.

FUNCTION
F Codes
E Codes
C Codes
P Codes
H Codes
A Codes
b Codes
r Codes
J Codes
d Codes
U Codes
y Codes
K Codes

H49	Starting mode (Auto search delay time 1) (Refer to H09)

For details, refer to the description of H09.

H50, H51 H52, H53	Non-linear V/f 1 (Frequency and voltage) (Refer to F04) Non-linear V/f 2 (Frequency and voltage)

For details, refer to the description of F04.

H54, H55 H56 H57 to H60	Acceleration/Deceleration time (Jogging) (Refer to F07) Deceleration time for forced stop 1st/2nd S-curve acceleration/deceleration range

For details, refer to the description of F07.

H61	UP/DOWN control (Initial frequency setting) (Refer to F01)

For details, refer to the description of F01.

H62	UP/DOWN control (extension function selection) (Refer to F01)

The UP/DOWN control extension function is described in detail in the function code F01 item.
The extension function selection is the same as that for function code E61. (However, 5, 19, 30, 33, 42, 45, and 48 cannot be selected.)

H63	Low limiter (Mode selection) (Refer to F15)

For details, refer to the description of F15.

H64	Low limiter (Lower limiting frequency)

H64 specifies the lower limit of frequency to be applied when the current limiter, torque limiter, or overload prevention control is activated. Basically, there is no need to modify the default setting.

- Data setting range: 0.0: Limit by F16 (Frequency limiter: Low) 0.1 to 599.0 (Hz)
- When performing sensorless vector control for synchronous motors, the internal operation for H64 will be 10% of F04 if H64 is set to less than 10% of F04 (base frequency).

H65, H66	Non-linear V/f 3 (Frequency and voltage) (Refer to F04)

The non-linear V/f pattern setting is described in detail in the function code F04 section.

H67	Auto energy saving operation (Mode selection) (Refer to F37)

The auto energy-saving operation (mode selection) setting is described in detail in the function code F37 section.

H68	Slip compensation 1 (Operating conditions selection) (Refer to F42)

For details, refer to the description of F42.

H69 H114	**Anti-regenerative control (Operation selection)** **Anti-regenerative control (Operation level)** **Related function codes: H76 (Torque limiter) (Frequency rising limit for braking)**

Enable the automatic deceleration (anti-regenerative control) with this function code. In the inverter not equipped with a PWM converter or braking unit, if the regenerative energy returned exceeds the inverter's braking capability, an overvoltage trip occurs. Turning digital input "AR-CCL" ON cancels anti-regenerative control.

If anti-regenerative control is selected, the output frequency is controlled to suppress the regenerative energy for avoiding an overvoltage trip.

H69 LED	Function		AR-CCL
	Control method	Force-to-stop with actual deceleration time exceeding 3 times the specified one	
0	Disable anti-regenerative control	-	OFF
2	Torque limit control	Enable	OFF
3	DC link bus voltage control	Enable	OFF
4	Torque limit control	Disable	OFF
5	DC link bus voltage control	Disable	OFF
Not required	Disable anti-regenerative control	-	ON

FRENIC-MEGA is equipped with two control modes: torque limiter and DC link bus voltage control.
Understand the features of the respective modes and select the appropriate one.

Control method	Control operation	Operation mode	Characteristics
Torque limiter (H69 = 2, 4)	Controls the output frequency so that the braking torque is approximately 0.	Enabled during acceleration, constant speed operation and deceleration.	Features high response and makes less prone to overvoltage trips under impact load. The frequency operation amount can be adjusted with H114.
DC link bus voltage control (H69 = 3, 5)	Controls the output frequency so that the DC link bus voltage is decreased when it exceeds the limit level.	Enabled only during deceleration Disabled during constant speed operation	Regenerative capability of the inverter will be maximum use. Deceleration time will be shorter than the torque limit control.

■ Anti-regenerative control "AR-CCL" (Function codes E01 to E09, data = 82)

Anti-regenerative control can be canceled with "AR-CCL". When "AR-CCL" is ON, the H69 setting is ignored, and anti-regenerative control is disabled.

■ Torque limiter (Frequency rising limit for braking) (H76)

- Data setting range: 0.0 to 599.0 (Hz)

With the torque limiter, the inverter increases the output frequency to limit the output torque. Excessive increase of the output frequency may cause danger, and therefore the frequency increment limit for braking (H76) is provided. This prevents the output frequency from increasing to exceed the "reference frequency + H76." If the limit is reached, however, anti-regenerative control is restricted and an overvoltage trip may occur. Increasing the frequency increment limit for braking improves the anti-regenerative capability.

This function is disabled under vector control. Under vector control, torque commands are restricted. The output frequency is determined by the speed at the load side.

If a run command is turned OFF, the anti-regenerative control causes the frequency to increase and operation may not stop depending on the load conditions. For safety, a function is provided in which the anti-regenerative control is forced to be disabled if the actual deceleration time becomes three times the deceleration time currently selected forcing the operation to stop. The function can be enabled/disabled by the setting of H69.

■ Anti-regenerative control (Operation level) (H114)

Allows the adjustment of the level when anti-regenerative control by torque limiter is performed with H69 = 2, 4. Basically, there is no need to modify the setting.

H114 data	Function
0.0 to 50.0 %	Adjusted level: Increasing the value increases the frequency operation.
999	Standard operation level

Note
- The deceleration time may be automatically increased by anti-regenerative control.
- Disable the anti-regenerative control when a braking unit is connected. Otherwise, the anti-regenerative control may be activated at the same time as the operation of the braking unit, resulting in a deceleration time not in accordance with the setting.
- An excessively short deceleration time causes the DC link bus voltage of the inverter to rise too fast for the anti-regenerative control to function. In that case, specify a longer deceleration time.

H70	Overload prevention control Reference function code:H110, H112

Specifies the rate of decrease of the output frequency of overload prevention control. Before the inverter generates a heat sink overheat or overload trip (alarm OH1 or OLU), the output frequency of the inverter is decreased for avoiding a trip. This is applied when operation is required to continue in a system in which the load decreases as the output frequency decreases, such as a pump.

H70 data	Function
0.00	Uses the deceleration time currently selected (F08, E11, E13, E15, etc.)
0.01 to 100.0	Decelerates at a deceleration rate of 0.01 to 100.0 (Hz/s).
999	Cancel overload prevention control

■ Performing overload prevention control “OLP” (Function code E20 to E24, E27, data = 36)

Outputs “OLP”, which is a signal that turns ON during overload prevention control, in order to inform that the overload prevention control has been activated and the output frequency has changed.

Note No effect can be expected in a system in which the load does not decrease even if the output frequency decreases. Do not use this function.

H71 d90	Deceleration characteristic (forced brake) Magnetic flux level during deceleration (rate of voltage increase)

When the motor is decelerating, if regenerative energy which exceeds that which the inverter is capable of processing, intermediate DC voltage will rise, and an overvoltage trip will occur. By setting this function code to 1 or 2, a higher output voltage than the command value is output when decelerating, motor loss is increased, and regenerative energy is consumed by the motor, allowing deceleration torque to be increased.

If H71 = 1, the rate of voltage increase can be adjusted with d90. If H71 = 2, output voltage is set proportional to the intermediate DC voltage (F05 = 0: same as disabling AVR) only when decelerating.

H71 data	Function
0	Disable
1	Forced brake operation (rate of voltage increase is adjusted with d90)
2	Forced brake operation (output voltage proportional to intermediate DC voltage: AVR disabled)

■ **Magnetic flux level during deceleration (rate of voltage increase) (d90)**

- Data setting range: 100 to 300(%)

If too large a value is set for d90, excessive current will flow, and the motor protection electronic thermal overload relay may be triggered.

Note This function is valid only when the motor is decelerating, and has no effect if a braking load is applied when the motor is accelerating, or running at constant speed. When anti-regenerative control of the torque limiter is enabled (H69 = 2, 4), the deceleration characteristic is disabled.

By enabling H71, motor loss increases, and the electronic thermal overload relay function may be triggered, causing the inverter to trip if it decelerates frequently. If this happens, connect a braking resistor.

H72	Main power shutdown detection (Mode selection)

This function monitors the AC input power supply of the inverter to see if the AC input power supply (main circuit power) is established and prevents inverter operation when the main circuit power is not established.

H72 data	Function
0	Disables main circuit power cutoff detection
1	Enables main circuit power cutoff detection

With power supply via a PWM converter or DC link bus, there is no AC input. When the data for H72 is “1,” the inverter cannot operate. Change the data for H72 to “0.”

Note For single-phase supply, consult your Fuji Electric representative.

H73 H74 H75	Torque limiting (Operating conditions selection) Torque limiting (Subject of control) Torque limiting (Applicable quadrant)

See F40, F41.

H76	Torque limiter (Braking) (Frequency rising limiter for braking) (Refer to H69)

The torque limiting (braking) (frequency rising limiter) setting is described in detail in the function code H69 section.

H77	Service life of DC link bus capacitor (Remaining time) Reference function code: H81 Warning selection 1

Indicates the time remaining before the end of service life of the DC link bus capacitor.

Transfer the DC link bus capacitor life data when replacing the printed circuit board.

- Data setting range: 0 to 87600 hours (set in 10 hour increments)

FUNCTION
F Codes
E Codes
C Codes
P Codes
H Codes
A Codes
b Codes
r Codes
J Codes
d Codes
U Codes
y Codes
K Codes

H78 H94	Maintenance interval (M1) Cumulative motor run time 1 Reference function code: H81 Warning selection 1

Specify the maintenance interval in hours with the maintenance interval (M1) (H78).

- Data setting range: 1 to 99990 hours (set in 10 hour increments)

■ Maintenance timer "MNT" (Function code E20 to E24, E27, data = 84)

When the cumulative motor run time 1 (H94) reaches the value specified by the maintenance interval (H78), the inverter outputs the maintenance timer signal "MNT". Furthermore, by assigning warnings with H81, rTE appears on the keypad when the set time is reached, and warning "L-ALM" is output to notify the user.

■ Cumulative motor run time 1 (H94)

The cumulative run time of the motor can be indicated by keypad operation. It can be used for management of the machinery or maintenance. Specifying an arbitrary time for the cumulative motor run time 1 (H94) allows an arbitrary value to be specified for the cumulative motor run time. It can be replaced with the initial data to use as a guide for the replacement of machine parts or inverter. Setting "0" allows the cumulative motor run time to be reset.

<For half yearly maintenance>

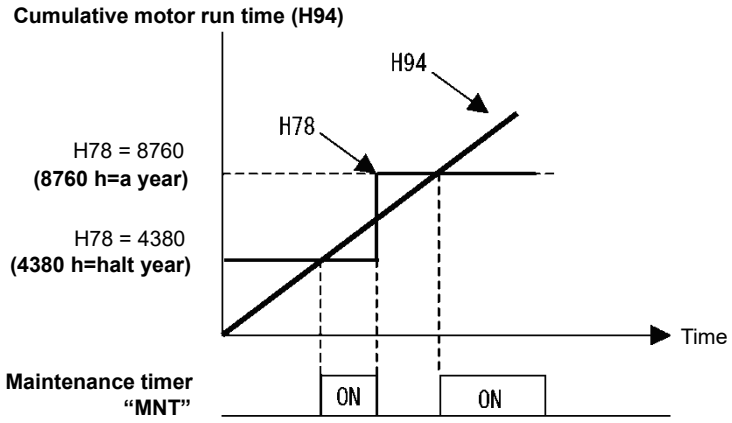

Note If the maintenance interval is reached, set a new value in H78 and press the FUNC/DATA key to reset the output signal and restart measurement.
This function is exclusively applied to the 1st motor.

■ Input during operation with commercial power supply (Motor 1 to 4) "CRUN-M1 to 4" (Function code E01 to E09, data = 72 to 75)

Even when a motor is driven by commercial power, not by the inverter, it is possible to count the cumulative motor run time 1 to 4 (H94, A51, b51, r51) by detecting the ON/OFF state of the auxiliary contact of the magnetic contactor for switching to the commercial power line.

Note Check the cumulative motor run time with 5_23 on Menu #5 "Maintenance Information" of the keypad.

H79	Preset startup count for maintenance (M1) Related function code: H44 Startup count for motor 1 Related function codes: H81 Warning selection 1

H79 specifies the number of inverter startup times to determine the next maintenance timing, e.g., for replacement of a belt.

The maximum of 65,535 times can be set.

- Data setting range: 0 (Disable), 1 to 65,535

■ Maintenance timer "MNT" (Function code E20 to E24, E27, data = 84)

When the startup counter for motor 1 (H44) reaches the number specified by H79 (Preset startup count for maintenance (M1)), the inverter outputs the maintenance timer signal "MNT" (if assigned to any digital terminal with any to E20 to E24 and E27) to inform the user of the need of the maintenance of the machinery. Furthermore, by assigning warnings with H81, Lnf appears on the keypad when the set number of times is reached, and warning "L-ALM" is output to notify the user.

< Maintenance every 1,000 times of startups >

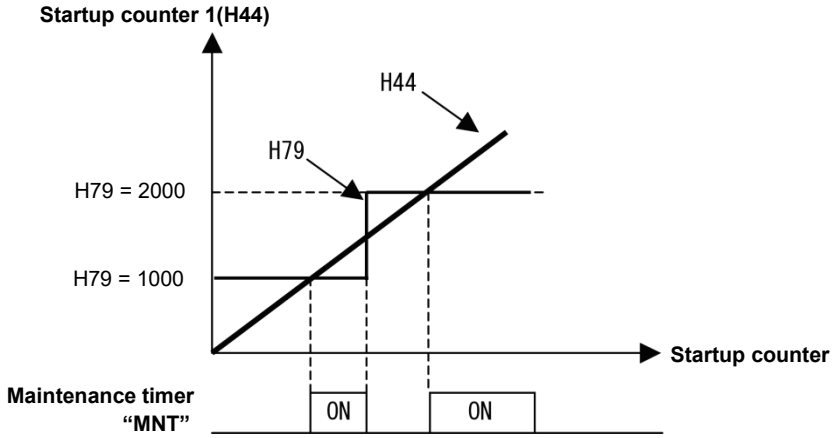

Note If the startup counter reaches the specified value, set a new value for the next maintenance in H79 and press the FUNC/DATA key to reset the output signal and restart counting.

This function is exclusively applied to the 1st motor.

H80, A41, b41, r41	Current vibration damping gain 1 to 4

The inverter output current driving the motor may fluctuate due to the motor characteristics and/or backlash in the machinery (load). Modifying the H80 data adjusts the controls in order to suppress such fluctuation. However, as incorrect setting of this gain may cause larger current fluctuation, do not modify the default setting unless it is necessary.

- Data setting range: 0.00 to 1.00

FUNCTION
F Codes
E Codes
C Codes
P Codes
H Codes
A Codes
b Codes
r Codes
J Codes
d Codes
U Codes
y Codes
K Codes

H81, H82, H83	Warning selection 1 to 3

If the inverter detects a minor abnormal state when detecting the error state, the display alternates between the warning code* and operating status monitor (frequency display, etc.), and operation can be continued without tripping the inverter. Function codes H81, H82, and H83 specify which alarms should be categorized as a “warning.”

Note Continuing operation while warning is occurring may cause damage to devices, and therefore the inverter should be stopped promptly from an external source.

* The alarm causes subject to selection and the display when a warning occurs are shown in the following table.

Alarm code	Name	Overview
OH1	Cooling fin overheat	Cooling fin temperature increased to the trip level.
OH2	External alarm	An error that has occurred in peripheral equipment turned the external alarm signal THR ON.
OH3	Inverter internal overheat	The temperature inside the inverter abnormally has increased.
OH6	Charging resistor overheat	The charging resistor temperature rises abnormally due to frequent power ON/OFF.
dbH	Breaking resistor overheat	Estimated temperature of the coil in the braking resistor exceeded the allowable level.
OL1 to OL4	Overload of motor 1 to 4	Motor temperature calculated with the inverter output current reached the trip level.
Er4	Option communication error	Communications error between the inverter and an option.
Er5	Option error	An option judged that an error occurred.
Er8 ErP	RS-485 communications error (COM port 1, 2)	RS-485 communications error in COM ports 1 or 2.
ErE	Speed inconsistency (excessive speed deviation)	The status outside the range (d21) for which the speed regulator deviation (between speed command and estimated speed value/detected speed) is set continued for equal to or longer than the set time (d22).
dO	Excessive position deviation	Excessive position deviation during position control
Ero	Positioning control error	The deviation overflow value (10 times function code d78) for which the position deviation was set was exceeded when performing synchronous control.
CoF	Current input wire break detection	Current input terminals [C1], [C2] (option) signal line break
FAL	Detect DC fan lock	Failure of the air circulation DC fan inside the inverter
OL	Motor overload early warning	Early warning before a motor overload
OH	Cooling fin overheat early warning	Early warning before a heat sink overheat trip
LiF	Lifetime alarm	It is judged that the service life of any one of the capacitors (DC link bus capacitors or electrolytic capacitors on the printed circuit boards) or cooling fan has expired.
rEF	Reference loss	Analog setting frequency wire break
Pid	PID alarm output	Warning related to PID control (absolute-value alarm or deviation alarm)
UtL	Low torque detection	Output torque drops below the low torque detection level for the specified period.
PtC	PTC thermistor activated	The motor PTC thermistor on the motor detected overheating.

Alarm code	Name	Overview
rrE	Inverter life (Cumulative run time)	The motor cumulative run time reached the specified level.
CnF	Inverter life (Number of startups)	Number of startups reached the specified level.
nrb	Thermistor wire break detection	Motor NTC thermistor wire break detection
Lob	Low battery warning	Low multi-function Keypad (TP-A2SW) remaining battery capacity
CA1 to CA5	User-defined alarm	Application alarm caused by customizable logic program
PU1, PU2	PID 1, 2 feedback error	PID control warning (absolute value warning, deviation warning) (PID control 1, PID control 2, external PID control 1 to 3) *101
PUA, PUb, PUC	External PID feedback error	
PA1, PA2	PID control 1，2 warning output	
PAA, PAb, PAC	External PID control 1, 2, 3 warning output	
iGb	IGBT lifetime alarm	IGBT element temperature power cycle lifetime alarm
rAF	Cooling capability drop warning	Capability drop warning due to cooling fin clogging or cooling fan air flow drop

*101: Supported with ROM0500 or later.

Set data for selecting “warnings” in hexadecimal. For details on how to select the codes, see the following content.

- Data setting range: h.0000 to h.FFFF (hexadecimal format)

■ Selecting warning factors

To set and display the applicable selection in hexadecimal format, the selectable factor is assigned to bits 0 to 15 in the bit assignment tables for H81 to H83 below. Set the bit that corresponds to the cause to be selected to “1.”

The selection status for warning can be expressed in binary or hexadecimal notation as shown in the selection factor display example.

Warning selection 1 (H81), bit assignment of selectable factors

Bit	Symbol	Content	Bit	Symbol	Content
15	OH6	Charging resistor overheat	7	OL3	Motor 3 overload
14	-	-	6	OL2	Motor 2 overload
13	ErP	RS-485 communications error (COM port 2)	5	OL1	Motor 1 overload
12	Er8	RS-485 communications error (COM port 1)	4	dbH	Breaking resistor overheat
11	Er5	Option error	3	-	-
10	Er4	Option communication error	2	OH3	Inverter internal overheat
9	-	-	1	OH2	External alarm
8	OL4	Motor 4 overload	0	OH1	Cooling fin overheat

Warning selection 2 (H82), bit assignment of selectable factors

Bit	Symbol	Content	Bit	Symbol	Content
15	Lob	Low battery warning	7	LIF	Lifetime alarm
14	nrb	Thermistor wire break detection	6	OH	Cooling fin overheat early warning
13	Cnt	Inverter life (Number of startups)	5	OL	Motor overload early warning
12	rtE	Inverter life (Cumulative run time)	4	FAL	Detect DC fan lock
11	PTC	PTC thermistor activated	3	CoF	Current input wire break detection
10	UtL	Low torque detection	2	Ero	Positioning control error
9	Pid	PID alarm output	1	dO	Excessive position deviation
8	rEF	Reference loss	0	ErE	Speed inconsistency (excessive speed deviation)

Warning selection 3 (H83), bit assignment of selectable factors

Bit	Symbol	Content	Bit	Symbol	Content
15	-	-	7	PUA PUb PUC	External PID feedback error *101
14	rAF	Cooling capability drop warning	6	PU2	PID2 feedback error *101
13	iGb	IGBT lifetime alarm	5	PU1	PID1 feedback error *101
12	-	-	4	CA5	User-defined alarm 5
11	-	-	3	CA4	User-defined alarm 4
10	PAA PAb PAC	External PID alarm *101	2	CA3	User-defined alarm 3
9	PA2	PID2 alarm *101	1	CA2	User-defined alarm 2
8	PA1	PID1 alarm *101	0	CA1	User-defined alarm 1

*101: Supported with ROM0500 or later.

Display of warning factors

(Example) Warning factors “RS-485 communications error (COM port 2),” “RS-485 communications error (COM port 1),” “Option communications error,” “Overload of motor 1” and “Cooling fin overheat” are selected by H81.

LED No.		LED 4				LED 3				LED 2				LED 1			
Bit		15	14	13	12	11	10	9	8	7	6	5	4	3	2	1	0
Symbol		-	-	ErP	Er8	Er5	Er4	-	OL4	OL3	OL2	OL1	dbH	-	OH3	OH2	OH1
Display example	Binary	0	0	1	1	0	1	0	0	0	0	1	0	0	0	0	1
	Hexadecimal * Refer to Conversion table	3				4				2				1			
	Hexadecimal on the LED monitor	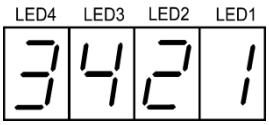															

■ **Hexadecimal expression**

A 4-bit binary number can be expressed in hexadecimal format (hexadecimal digit). The table below shows the correspondence between the two notations. If displayed at the keypad, h. appears in the left digit.

Binary and hexadecimal conversion

Binary				Hexadecimal	Binary				Hexadecimal
0	0	0	0	0	1	0	0	0	8
0	0	0	1	1	1	0	0	1	9
0	0	1	0	2	1	0	1	0	A
0	0	1	1	3	1	0	1	1	b
0	1	0	0	4	1	1	0	0	C
0	1	0	1	5	1	1	0	1	d
0	1	1	0	6	1	1	1	0	E
0	1	1	1	7	1	1	1	1	F

Note

If H26 (thermistor (operation selection)) data is set to “1” (PTC: 0H4 trips, inverter stops), the inverter is stopped without a warning occurring, regardless of the H82 (warning selection 2) bit 11 (PTC thermistor operation) setting.

■ **Warning “L-ALM” assignment (Function code E20 to E24, E27, data = 98)**

This output signal “L-ALM” comes ON when a warning occurs.

FUNCTION
F Codes
E Codes
C Codes
P Codes
H Codes
A Codes
b Codes
r Codes
J Codes
d Codes
U Codes
y Codes
K Codes

H84, H85	Pre-excitation (Initial level, Time)

A motor generates torque with magnetic flux and torque current. Lag elements of the rising edge of magnetic flux causes a phenomenon in which enough torque is not generated at the moment of the motor start. To obtain enough torque even at the moment of motor start, enable the pre-excitation with H84 and H85 so that magnetic flux is established before a motor start.

■ Pre-excitation (Initial level) (H84)

H84 specifies the forcing function for the pre-excitation. It is used to shorten the pre-excitation time.

Basically, there is no need to modify the default setting.

- Data setting range: 100 to 400 (%) (exciting current level in percentage)

■ Pre-excitation (Time) (H85)

H85 specifies the pre-excitation time before starting operation.

- Data setting range: 0.00 (Disable), 0.01 to 30.00 (s)

When a run command is inputted, the pre-excitation starts.

After the pre-excitation time specified by H85 has elapsed, the inverter judges magnetic flux to have been established and starts acceleration. Specify H85 data so that enough time is secured for establishing magnetic flux. The appropriate value for H85 data depends on the motor capacity. Use the default setting value of H13 data as a guide.

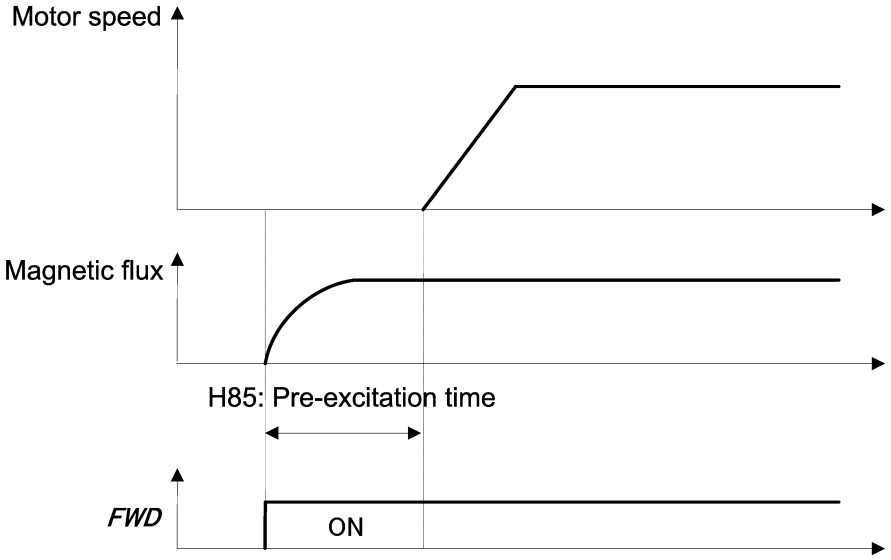

■ **Pre-excite --EXITE (E01 to E09, data = 32)**

Turning this input signal ON starts pre-excitation. After the delay time for establishing magnetic flux has elapsed, a run command is inputted. Inputting the run command terminates pre-excitation and starts acceleration.

Use an external sequence to control the time for establishing magnetic flux.

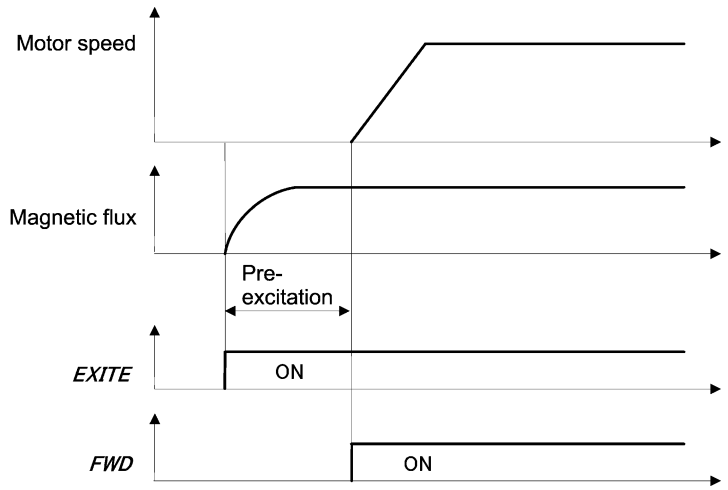

Note Under V/f control (including auto torque boost and torque vector), pre-excitation is disabled, so use DC braking or hold the starting frequency instead.

Note A transient phenomenon, which may occur when the losses of the machinery (load) are small, may make the motor rotate during pre-excitation. If the motor rotation during pre-excitation is not allowed in your system, install a mechanical brake or other mechanism to stop the motor.

⚠WARNING

Even if the motor stops due to pre-excitation, voltage is output to inverter's output terminals U, V, and W.

Failure to observe this could result in electric shock.

FUNCTION
F Codes
E Codes
C Codes
P Codes
H Codes
A Codes
b Codes
r Codes
J Codes
d Codes
U Codes
y Codes
K Codes

H86, H90	For adjustment by manufacturer

Do not access these function codes.

H89	Electronic thermal overload protection for motor 1 to 4 (data retention)

It is possible to select whether to also retain the cumulative time for electronic thermal overload relays 1 to 4 (for motor protection) while the power is OFF.

H89 data	Function
0	The integrated value for electronic thermal overload relays 1 to 4 is cleared when the power is turned OFF and ON again.
1	Retains the integrated value for electronic thermal overload relays 1 to 4 even when the power is OFF.

H91	Current input wire break detection

Terminal [C1] (C1 function) (current input) wire break can be detected and processed as an alarm (CoF alarm).

If using an analog interface card (OPC-AIO), wire break can be detected for both terminal [C2] and terminal [C1] in the same way and processed as an alarm (CoF alarm).

If a current input wire break is detected, Y terminal function “C1OFF” is output based on the o88: C1OFF signal operation selection setting.

Function code H91 specifies whether the wire break detection is enabled, and the duration of detection.

A wire break is detected if the terminal [C1] and [C2] current input is less than 2 mA.

The CoF alarm can also be assigned as a warning with H82. If a wire break is detected, CoF appears on the keypad, and warning “L-ALM” is output to notify the user.

This is only effective if used with C40 = 0 or 10 (4 to 20 mA).

- Data setting range: 0.0 (Disable wire break detection)
  0.1 to 60.0 s (Detect wire break and issue of alarm CoF within the time)

H92, H93	Continuous running at the momentary power failure (P, I) (Refer to F14)

The continue to run (P, I) setting is described in detail in the function code F14 section.

H94	Cumulative motor run time 1 (Refer to H78)

The motor cumulative run time 1 setting is described in detail in the function code H78 section.

H95	DC braking (Braking response mode) (Refer to F20 to F22)

The DC braking setting is described in detail in the function code F20 to F22 section.

H96	STOP key priority/Start check function

H96 specifies a functional combination of "(STOP) STOP key priority" and "Start check function" as listed below.

H96 data	(STOP) STOP key priority	Start check function	(RUN) key save function *101
0	Disable	Disable	Disable
1	Enable	Disable	Disable
2	Disable	Enable	Disable
3	Enable	Enable	Disable
4 *101	Disable	Disable	Enable
5 *101	Enable	Disable	Enable

■ STOP key priority

Even when run commands are entered from the digital input terminals or via the RS-485 communications link (link operation), pressing the keypad (STOP) key forces the inverter to decelerate and stop the motor. After that, Er6 appears on the LED monitor.

■ Start check function

For safety, this function checks whether any run command has been turned ON or not in each of the following situations. If one has been turned ON, the inverter does not start up but displays alarm code Er6 on the LED monitor.

- When the power to the inverter is turned ON.
- When the (PRG/RESET) key is pressed to release an alarm status or when the digital input terminal command "RST" ("Reset alarm") is turned ON.
- When the run command source is switched by a digital input terminal command such as "LE" ("Enable communications link via RS-485 or fieldbus") or "LOC" ("Select local (keypad) operation").

■ RUN key save function *101

This is valid when running or operating the inverter (F02 = 0, 2, 3) with the keypad.

If the power is turned OFF or a lengthy power failure occurs during operation when H96 is set to "5" or "6", inverter operation is resumed after restoring the power without pressing a (RUN) key.

Note If an alarm occurs during operation, operation does not resume even if the RUN key hold is cleared, and the power is turned OFF and ON again.
However, if the operation selection for resuming operation following a momentary power failure is set to immediate trip (F14 = 0), and an undervoltage condition has occurred (LU), operation is resumed by turning the power OFF and ON again.

⚠CAUTION

- The inverter begins running automatically when the power is turned OFF, or the power is restored following a power failure during inverter operation.
  Due caution is advised when using this function.
- Confirm that this function can be used safely when combined with the application.
- Users are responsible for validating this function. Fuji Electric accepts no responsibility.

Failure to observe this could result in an accident.

*101: Supported with ROM0500 or later.

FUNCTION
F Codes
E Codes
C Codes
P Codes
H Codes
A Codes
b Codes
r Codes
J Codes
d Codes
U Codes
y Codes
K Codes

H97	Clear alarm data Related function code: H45 Mock alarm

Clears information (alarm history, relevant information when alarm occurs) for alarms that occur when performing machine adjustment,and returns the converter to the state before the alarm occurred.

To clear alarm data, simultaneous keying of "STOP key + ▲ key" is required.

H97 data	Function
0	Disable
1	Clear (Setting "1" clears alarm data and then returns to "0.")

H98	Protection/Maintenance function (Mode selection)

H98 specifies whether to enable or disable automatic lowering of carrier frequency, input phase loss protection, output phase loss protection, judgment threshold on the life of DC link bus capacitor, judgment on the life of DC link bus capacitor, DC fan lock detection and braking transistor error detection by setting a bit combination.

Automatic lowering of carrier frequency (Bit 0)

This function should be used for critical machinery that requires keeping the inverter running. Even if a heat sink overheat or overload occurs due to excessive load, abnormal surrounding temperature, or cooling system failure, enabling this function lowers the carrier frequency to avoid tripping (OH1, OH3, OLU). Note that enabling this function results in increased motor noise.

Note Under sensorless vector control (synchronous motors), the automatic carrier frequency reduction function does not work. (ROM0300 or later)

Input phase loss protection (Lin) (Bit 1)

This function detects the voltage unbalance between the phases and phase loss of 3-phase power supply. And an alarm displays Lin to stop the inverter when it detects.

Note In configurations where only a light load is driven or a DC reactor is connected, phase loss or line-to-line voltage unbalance may not be detected because of the relatively small stress on the apparatus connected to the main circuit.

Output phase loss protection (OPL : Output Phase Loss) (Bit 2)

Upon detection of output phase loss while the inverter is running, this feature stops the inverter and displays an alarm OPL.

Note Where a magnetic contactor is installed in the inverter output circuit, if the magnetic contactor goes OFF during operation, all the phases will be lost. In such a case, this protection function does not work.

Judgment threshold on the life of DC link bus capacitor (Bit 3)

Bit 3 is used to select the threshold for judging the life of the DC link bus capacitor between the factory default setting and a user-defined setting.

Note Before specifying a user-defined threshold, measure and confirm the reference level in advance.
(📖 Function code H42)

Judgment on the life of DC link bus capacitor (Bit 4)

Whether the DC link bus capacitor has reached its life is judged by measuring the discharging time after power OFF. The discharging time is determined by the capacitance of the DC link bus capacitor and the load inside the inverter. Therefore, if the load inside the inverter fluctuates significantly, the discharging time cannot be accurately measured. As a result, it may be mistakenly determined that the DC link bus capacitor has reached the end of its life. To avoid such an error, you can disable the judgment based on the discharging time. (Even if it is disabled, the judgment based on the "ON-time counting" while the voltage is applied to the DC link bus capacitor is performed.)

Refer to function code H42 for details.

Since load may fluctuate significantly in the cases described below, disable the judgment on the life during operation even in user-defined setting mode. During periodical maintenance, either conduct the measurement with the judgment enabled under appropriate conditions or conduct the measurement under the operating conditions matching the actual ones.

- Auxiliary input for control power is used.
- An option card is used.
- Another inverter or equipment such as a PWM converter is connected to terminals of the DC link bus.

DC fan lock detection (bit 5) (FRN0215 to 0432G2S-2G, FRN0217 to 1480G2□-4G)

FRN0215 to 0432G2S-2G, and FRN0217 to 1480G2□-4G are equipped with an internal agitator fan. If a fan lock is detected due to an internal agitator fan fault, etc., it is possible to select whether to process this as an alarm, or to continue to run.

Alarm processing: A FAL alarm occurs, and the motor coasts to a stop.

Continue to run processing: No alarm occurs, and the inverter continues to run.

However, even if either of these settings is specified, the transistor output "LIFE" output signal turns ON if a DC fan lock is detected.

Note: If cooling fan ON-OFF control is enabled (H06 = 1), depending on the conditions, the cooling fan may stop. If this happens, the inverter will judge that the fan lock detection is normal (fan stopped with fan stop command), and therefore even if the lock is applied due to such reasons as an internal agitator fan fault, the "LIFE" signal will turn OFF, allowing the FAL alarm to be cleared. (When operation is resumed, a command instructing the fan to run is issued, and the "LIFE" signal turns ON, or a FAL alarm occurs.)

If operation is continued for a long period of time with the lock applied due to such reasons as an internal agitator fan fault, there is a danger of the life expectancy of the electrolytic capacitors on the PCB being cut short due to local temperature rises. Be sure to carry out a check with the "LIFE" alarm, and replace the motor immediately.

Braking transistor error detection (dbA) (Bit 6)

Upon detection of a built-in braking transistor error, this feature stops the inverter and displays an alarm dbA. Set data of this bit to "0" when the inverter does not use a braking transistor and there is no need of entering an alarm state.

IP20/IP40 switching (bit 7) (FRN0003 to 0115G2S-2G/FRN0002 to 0060G2S-4G basic type only)

On FRN0003 to 0115G2S-2G/FRN0002 to 0060G2S-4G, the protective construction can be changed from IP20 to IP40 with an option. However, it is necessary to change to a level of protection appropriate for IP40 due to the protective coordination relationship.

For details, refer to the IP40 Option Instruction Manual.

Note: Do not install IP40 compatible attachments or perform IP20/IP40 switching operation on the FRN0002 to 0060G2E-4G.

FUNCTION
F Codes
E Codes
C Codes
P Codes
H Codes
A Codes
b Codes
r Codes
J Codes
d Codes
U Codes
y Codes
K Codes

To set data of function code H98, assign the setting of each function to each bit and then convert the 8-bit binary to the decimal number. Refer to the assignment of each function to each bit and a conversion example below.

Bit	Function	Data = 0	Data = 1	Factory default
Bit 0	Lower the carrier frequency automatically	Disable	Enable	1: Enable
Bit 1	Detect input phase loss	Continue to run	Enter alarm processing	1: Enter alarm processing
Bit 2	Detect output phase loss	Continue to run	Enter alarm processing	0: Continue to run
Bit 3	Select life judgment threshold of DC link bus capacitor	Factory default	User-defined setting	0: Factory default
Bit 4	Judge the life of DC link bus capacitor	Disable	Enable	1: Enable
Bit 5	DC fan lock detection	Enable	Disable	0: Enable
Bit 6	Detect braking transistor breakdown	Continue to run	Enter alarm processing	1: Enter alarm processing
Bit 7	IP20/IP40 switching	0: IP20	1: IP40	0: IP20

H99, **H197, H198** **H199**	**Password 2 setting/check** **User password 1 (selection of protective operation, setting check)** **User password protection valid**

The password function is the function to hide the function code entirely/partially which is set for the inverter. When this function is used, perform correct settings after familiarizing yourself with the following details. If incorrect settings are made, the function code cannot be changed or checked. An alarm may also occur and the inverter may stop. Perform the operation carefully.

Tip H99 and H198 data can be changed using the "STOP key + ▲ key" or "STOP key + ▼ key" double operations. Furthermore, H199 is not possible to display the data change screen when H198 has not been set.

Tip By calling the Programming mode 1. Data Setting, 2. Data Check, or 0. Favorites menu while password protection is running, a decimal point "." is displayed at the end of the digits displayed on the keypad LED monitor.

Tip If the objective is to prevent inadvertent rewriting of the setting value from the keypad, it is recommended to use the data protective function with function code F00 rather than the password function. For details of the data protection, refer to the items in F00.

Note If a password is set carelessly, the setting values cannot be changed from the keypad, multi-function keypad, or external device using the link function. Be careful for setting.

Note If an incorrect password setting value is entered and you failed to decode the password, the password protection state cannot be released. In addition, failure to decode the password consecutively 5 times results in a warning.

Note To prevent the password decoding by an ill-disposed third party, failure to decode the password for the specified number of times results in LOK alarm, which disables the inverter operation. Therefore, it is recommended to decode the password during stop of the system. If it is necessary to decode the password during operation, perform decoding carefully.

Note We are not able to know the passwords set by customers. If you have forgotten the password setting value, the only way to decode the password is initialization of the function code. Set and control the password carefully.

Note Password H198 and H99 cannot be accessed via communication.

■ **Password 1 (Rewrite disable protection)**

Function code setting values excluding some codes can be protected as rewrite disable.

Select the target function code which is protected by H197 and set the password (hexadecimal 4 digits) with function code H198. When function code H199 is set to 1, password 1 protective status (rewrite disable protection) is active.

No.	Name	Function, setting range
H197	Protective operation selection	0: All function codes are disclosed, but the change is not allowed. 1: Only the function code registered in "Favorites" can be disclosed/changed. 2: Only the function code for customize logic setting is not disclosed/not changed.
H198	Setting/comparison	0000 to FFFF
H199	Protection enable	0: Invalid 1: Protection

FUNCTION
F Codes
E Codes
C Codes
P Codes
H Codes
A Codes
b Codes
r Codes
J Codes
d Codes
U Codes
y Codes
K Codes

■ **Temporary disabling of password 1 (Rewrite disable protection)**

When password 1 protective status is shown and the same value as the password set for function code H198 is entered in H198, password 1 protective status is temporarily released and the function code setting value can be rewritten.

If password 2 is set at the same time, it is necessary to decode password 2 with H99 in advance.

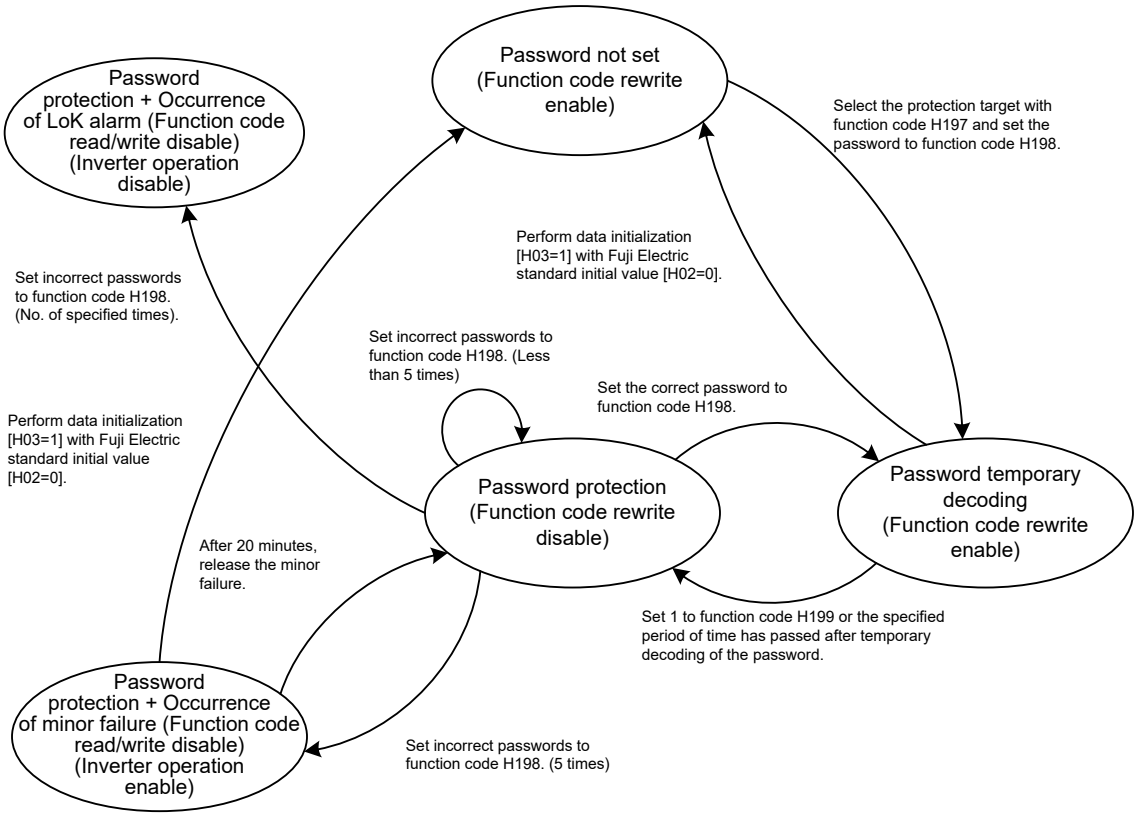

Relation chart of password 1 protection status

■ **Password 2 (Read/write disable protection)**

Setting values of all function codes not by selecting function code H197 can be protected as read disable and rewrite disable. (Exceptionally, partial function codes are not protected.)

Set the password with function code H99 and set function code H199 to 1. Password 2 protective status (read/write disable protection) is active.

The function code of read/write disable does not allow writing of the setting value to the inverter with the keypad, multi-function keypad, or external device using serial communication, or reading of the setting value.

■ **Temporary disabling of password 2 (Read/write disable protection)**

When password 2 protective status is shown and the same value as the password (hexadecimal 4 digits) set for function code H99 is entered in H99, password 2 protective status is temporarily decoded and the function code value can be read and it can be displayed on the keypad.

If password 1 protection (rewrite disable protection) is also set, the function code can be rewritten by temporarily decoding password 1 protective status continuously.

■ **Passwords 1, 2 temporary disabling failure**

In password 1 protective status or password 2 protective status, if the password value entered in function code H198 or H99 is incorrect when trying to temporarily cancel the protective status, temporary decoding is disabled.

In both function codes H198 and H99, 5 consecutive failures of password input result in a warning.

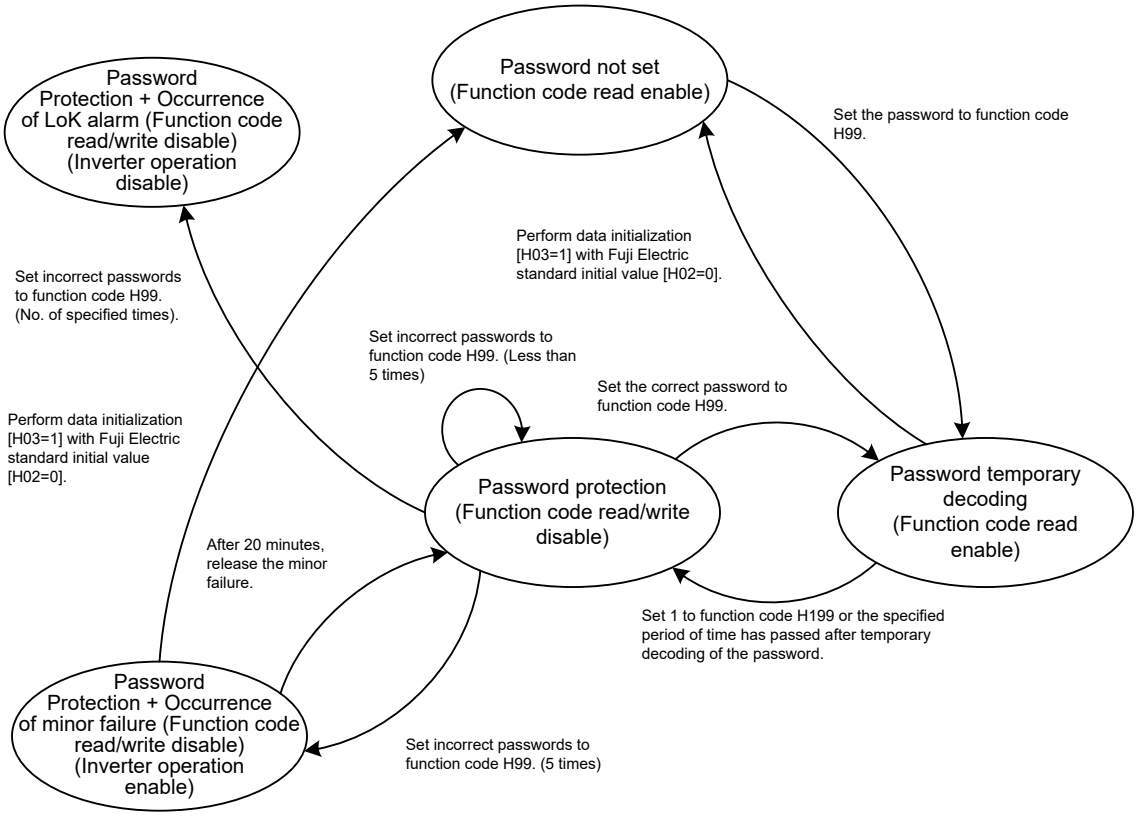

Relation chart of password 2 protection status

Note In our factory default status, passwords are not provided excluding special products. Therefore, if the password set for H198 or H99 is unknown or forgotten, we do not answer or inform you of the password or its decoding method from protective status.

For this reason, set and control the password at your own risk. If a password is set at the delivery of the product and its decoding is required, please contact the dealer you purchased or the unit manufacturer. (We are not able to know the passwords set by customers.)

■ **Setting and temporary disabling of password 1, 2 using multi-function keypad**

Setting or temporary decoding of passwords 1 and 2 using the multi-function keypad is performed by the special menu on the multi-function keypad. Therefore, function codes H99, H198 and H199 are not displayed on the function code list of the function code setting menu or function code check menu on the multi-function keypad (H197 is displayed).

For the special password menu of the multi-function keypad, refer to the instruction manual of the multi-function keypad.

5.3.6 H1 codes (High performance functions)

H101	Destination

Refer to Chapter 4 “4.4 Destination Setting”.

H104	Number-of-retry Clear Time *101 Related function code: H04, H05

*101: Supported with ROM0500 or later.

Sets the retry count clear time.

After resuming operation with a retry, if the inverter output frequency speed become constant, and no retry target alarm occurs in the time set at retry count clear time (H104), the retry count is cleared.

- Data setting range: 0.5 to 5.0 (min)

<Operation chart>

· Normal operation is resumed at the 3rd retry (no retry target alarm occurs within time set at H104)

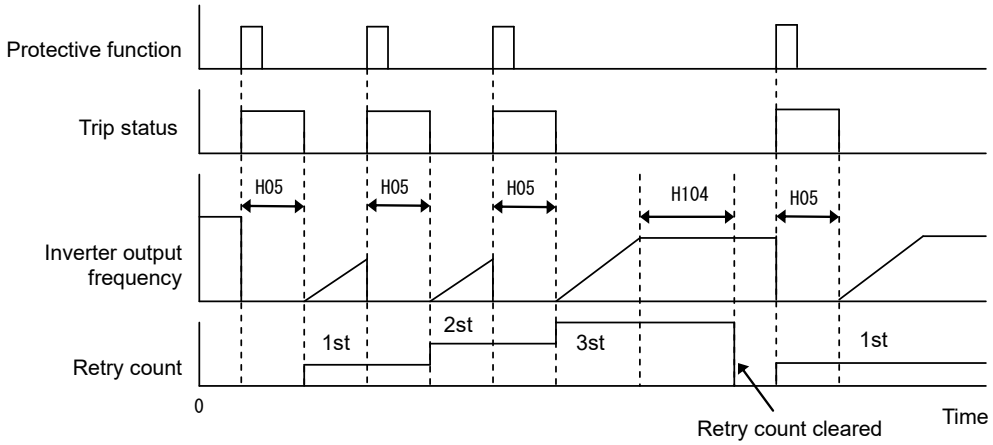

H105, H106	Retry target selection *101 Related function code:H04, H05, H104

*101: Supported with ROM0500 or later.

Selects the retry target for the retry function (H04, H05). Bits 0 to 7 are assigned to retry targets as shown in the following table. By selecting a retry target, it is converted to decimal notation with bit of “1” and set.

Tip Retry targets can be set in bit units if using the multi-function keypad (TP-A2SW).
(automatically converted to decimal notation)

■ **Retry target selection 1 (H105)**

Bit	7	6	5	4	3	2	1	0
Protective function name	-	Step-out/magnetic pole position detection failure	Motor overheating	Motor 1 overload	Braking resistor overheating	Overheat protection	Overvoltage protection	Overcurrent protection
Alarm display	-	Erd	OH4	OL1	dbH	OH1 OH3 OLU	OU1 OU2 OU3	OC1 OC2 OC3

· Data setting range: 0 to 127 (decimal)

■ **Retry target selection 2 (H106)**

Bit	7	6	5	4	3	2	1	0
Protective function	-	-	-	-	-	-	Undervoltage	External alarm
Alarm display	-	-	-	-	-	-	LU	OH2

· Data setting range: 0 to 3 (decimal)

H110 H112 *101	OL Prevention (Lin Op) OL Prevention (LV Op) Related function code:H70

*101: Supported with ROM0500 or later.

■ **OL Prevention (Lin Op) (H110)**

The operation for avoiding an overload due to power input phase loss can be selected.

This sets whether to stop the inverter with an alarm (input phase loss protection: Lin) or perform avoidance operation (inverter automatically lowers output frequency) when a three-phase power supply phase loss or interphase unbalance is detected.

The frequency decrease rate is the same as H70. The currently selected deceleration time is used if H70 = 999.

■ **OL Prevention (LV Op) (H112)**

If the inverter becomes incapable of outputting the output voltage in accordance with the command value (V/f control) for such reasons as a drop in three-phase power supply voltage, the output current may increase depending on the load condition. By selecting avoidance operation, the inverter output voltage automatically drops to a frequency at which it can be output in accordance with the command value.

The frequency decrease rate is the same as H70. The currently selected deceleration time is used if H70 = 999.

H114	Anti-regenerative control (Operation level)	Related function code: H69

This function code is described in detail at the H69 item.

H116	Forced operation (Fire Mode)	(Operation selection)
H117		(Confirmation time)
H118		(Set frequency)
H119		(Run direction)
H120		(Starting method)
H121		(Waiting time)

Set when wishing to enable forced operation (Fire Mode). With forced operation, the motor can be forcibly run at the specified speed. Even if an alarm occurs during forced operation, operation can be continued. If an alarm occurs due to a protective function such as OC (instantaneous overcurrent protection), operation is resumed with automatic reset. The time until operation is resumed can be set. If switching to forced operation, "Fod" is recorded in the alarm history for the purpose of retaining a record. If continuing operation with forced operation, alarms that are automatically reset are not recorded in the alarm history.

By assigning "FMS" to a digital input terminal and turning "FMS" ON, forced operation (Fire Mode) is enabled. (Function code E01 to E09, data = 134)

By assigning "FMRUN" to a digital output terminal, it turns ON during forced operation. (Function code E20 to E24, E27, data = 95)

Note By selecting automatic reset with forced operation, the inverter will continue to run with no protective functions, resulting in a risk of inverter damage or fire, etc.

■ Forced operation (Fire Mode) (Operation selection) (H116)

- Data setting range: 0, 1, 2, 10, 11, 12, 20, 21, 22

By setting H116, it is possible to select from a total of nine operation modes by combining the three types of forced operation end timing (ON, toggle, latch) and three types of alarm subject to an automatic reset (FMS-1, 2, 3).

H116 data	Forced operation
0: ON-1 10: ON-2 20: ON-3	Forced operation starts when “FMS” turns ON, and normal operation is performed when “FMS” turns OFF. 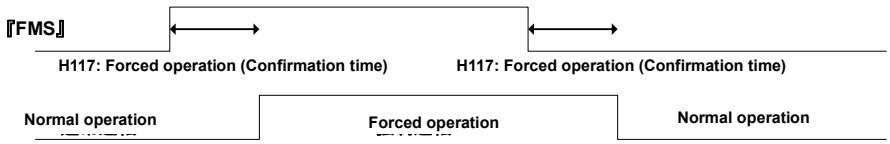
1: Toggle-1 11: Toggle-2 21: Toggle-3	Forced operation starts when “FMS” turns ON or OFF, and normal operation is performed when “FMS” next turns ON or OFF. 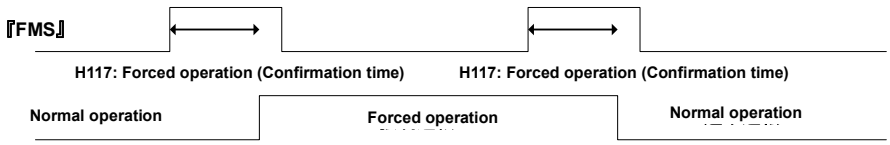
2: Latch-1 12: Latch-2 22: Latch-3	Forced operation starts when “FMS” turns ON (selection maintained until power turned OFF). 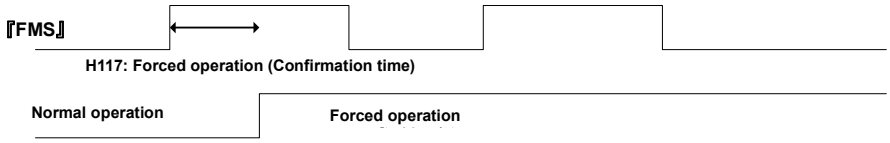

Alarm code	Protective function	FMS-1	FMS-2	FMS-3
		0: ON-1 1: Toggle method-1 2: Latch method-1	10: ON-2 11: Toggle method-2 12: Latch method-2	20: ON-3 21: Toggle method-3 22: Latch method-3
OC1, OC2, OC3	Overcurrent protection	Automatic reset	Alarm occurrence	Alarm occurrence
OU1, OU2, OU3	Overvoltage protection		Automatic reset	
LU	Undervoltage			
EF	Ground fault protection			
Other alarms		Continue to run or automatic reset		

■ Forced operation (Fire Mode) (Confirmation time) (H117)

- Data setting range: 0.5 to 10.0 (s)

Sets the time at which “FMS” signal ON/OFF is established. This is ignored if “FMS” is turned ON or OFF in a time shorter than this. Turn the “FMS” signal ON for a time longer than the H117 confirmation time.

■ Forced operation (Fire Mode) (Set frequency) (H118)

Sets the specified speed (set frequency) when forced operation (Fire Mode) is enabled.

H118 data	Function
0.0	This is based on the set frequency selected with Frequency setting 1 (F01) and Frequency setting 2 (C30). Under PID control, PID output (set frequency) is maintained when switching to forced operation.
0.1 to 599.0 Hz	The desired set frequency can be set in 0.1 Hz increments.

FUNCTION
F Codes
E Codes
C Codes
P Codes
H Codes
A Codes
b Codes
r Codes
J Codes
d Codes
U Codes
y Codes
K Codes

■ **Forced operation (Fire Mode) (Run direction) (H119)**

Sets the run command and rotation direction when forced operation (Fire Mode) is enabled.

H119 data	Function
0	Run/stop with run command (run command selected with F02) when performing normal operation * The motor does not run if the run command is OFF, but alarms are automatically reset.
2	Operation in forward direction (FWD) * The motor is forcibly rotated in the forward direction regardless of whether a run command has been specified.
3	Operation in reverse direction (REV) * The motor is forcibly rotated in the reverse direction regardless of whether a run command has been specified.

■ **Forced operation (Fire Mode) (Starting method) (H120)**

Sets the starting method when forced operation (Fire Mode) is enabled.

H120 data	Function
0	Starting method when performing normal operation (starting method selected with H09, d67)
1	Start-up in auto search mode (retracts without stopping motor while idling)

■ **Forced operation (Fire Mode) (Wait time) (H121)**

- Data setting range: 0.5 to 20.0 s

Sets the wait time until an automatic reset for inverter tripping while performing forced operation (Fire Mode).

H130 to H132	For special adjustment (Torque limiting)

This function code is used to adjust the torque limiting responsiveness for a control method other than vector control. Normally, it is not necessary to change the data of these function codes.

H133 to H135	For special adjustment (Anti-regenerative control)

This function code is used to adjust the anti-regenerative control responsiveness. Normally, it is not necessary to change the data of these function codes.

H136, H137	For special adjustment (Current limiting)

This function code is used to adjust the current limiting responsiveness for a control method other than vector control. These are the control parameter for PMSMs. Normally, it is not necessary to change the data of these function codes.

H147	Speed control (Jogging) (Feed forward gain)

Refer to the description of d01 to d08.

H154	**Torque bias**	**(Operation selection)**
H155 to H157		**(Level 1 to 3)**
H158		**(Mechanical loss compensation)**
H159		**(Startup timer)**
H161		**(Shutdown timer)**
H162		**(Limiter)**

Torque bias value is added to the torque command (the output of ASR) before the torque limiter value. As a result of this, a significant amount of torque can be output with no speed deviation when starting. The torque bias level can be selected from the analog input value or the three fixed values which are specified with function codes and switched by the digital input signals “TB1” and “TB2”. Refer to Chapter 8, “Figure 8.9-5 Vector control (torque command / torque limit) section block diagram” for block diagrams.

The direction of run command and the polarity of the torque bias determine the mode of drive operation (driving/braking). Refer to the figure below.

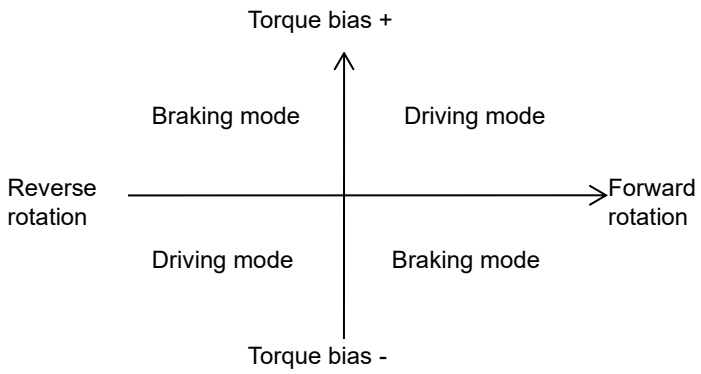

■ **Torque bias (Mode selection) (H154)**

This function allows to select the method of torque bias input.

H154 data	Function
0	Disable torque bias
1	H155 to H157: Enable levels 1, 2 and 3 selected by digital inputs “TB1”, “TB2”.
2	Enable analog input value.
3	RS-485 communications link (port 1)
4	RS-485 communications link (port 2)
5	Field bus communication

■ **Set level 1, 2 and 3 (H155 to H157); Select torque bias 1, 2 -- “TB1”, “TB2” (E01 to E05 data = 61, 62)**

The torque bias level is selected with terminal “TB1” and “TB2”. This is valid only when H154 = 1.

Input signal		Torque-bias to be selected
“TB2”	“TB1”	
OFF	OFF	Disable torque-bias
OFF	ON	H155: Torque bias level 1
ON	OFF	H156: Torque bias level 2
ON	ON	H157: Torque bias level 3

- Data setting range: -300 to +300(%) (motor rated torque reference)

FUNCTION
F Codes
E Codes
C Codes
P Codes
H Codes
A Codes
b Codes
r Codes
J Codes
d Codes
U Codes
y Codes
K Codes

■ Mechanical loss compensation (H158)

Use this function to compensate the amount of the mechanical loss of a load.

- Data setting range: 0 to 300.00 (%) of a motor rated torque

■ Torque bias hold command “H-TB” (E01 to E09, data = 62)

Turning this terminal command ON enables a torque-bias hold command. Hold is canceled by turning this terminal OFF.

■ Startup timer (H159)

By simply adding the torque bias, the shock may be large. By setting the timer with this function code, the motor can be started with minimal shock. H159 is the time to increase the bias torque from 0 to 100 % of the motor rated torque. If this function code is set to “0.00”, the torque bias is activated immediately.

- Data setting range: 0.00 to 1.00 (s)

■ Shutdown timer (H161)

By setting the shutdown timer, torque bias can be eliminated gradually in the same way as the startup timer. H161 is the time to decrease 100% of the torque. If this function code is set to “0.00”, the torque bias is activated immediately.

- Data setting range: 0.00 to 1.00 (s)

■ Torque bias (Limiter) (H162)

Analog torque bias normally uses a load, but if the sensor is faulty, there is a risk of an excessive torque bias being set. By setting the torque bias limiter, the torque bias value maximum value can be limited.

Data setting range: 0 to 300(%)

H173	Magnetic flux level at light load

This function decreases the motor magnetic flux at light load and can reduce the motor noise. This can only be used under vector control with sensor. The motor magnetic flux command is controlled in proportion to torque current command that is less than 50%. H173 specifies the minimum value of the flux command. Refer to the figure below.

Data setting range: 10 to 100(%)

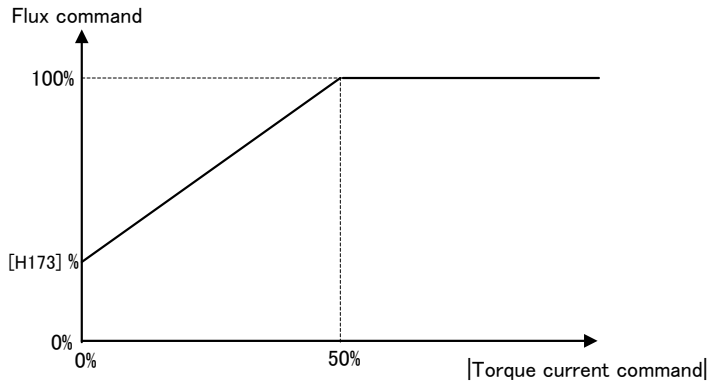

H180	Brake control signal (Check-timer for brake operation) Related function code: J68 to J72

Refer to the description of J68.

H190	Motor output phase sequence selection

If the motor rotation direction differs from the operation direction, using this function switches the inverter output terminal UVW phase sequence without changing the motor wiring, allowing the motor rotation direction to be aligned with the operation direction.

H190 data	Function
0	No phase sequence change
1	Terminal [U]: outputs U phase, terminal [V]: outputs W phase, terminal [W]: outputs V phase

Double key operation (STOP key + ▲/▼ keys) is required to change function code H190 data.

H193, H194	User preference dataset (save, protection) Related function code: H03

Refer to the description of H02, H03.

H195	DC braking (Braking timer at the startup) Related function code: F21

DC braking can be activated at startup. For details, refer to the description of F21.

H196	For adjustment by manufacturer

Do not access these function codes.

H197, H198 H199	User password 1 (selection of protective operation, setting check) User password protection valid Related function code: H99

Refer to the description of H99.

FUNCTION
F Codes
E Codes
C Codes
P Codes
H Codes
A Codes
b Codes
r Codes
J Codes
d Codes
U Codes
y Codes
K Codes

5.3.7 A, b, r codes (Motor 2 to 4 parameters)

FRENIC-MEGA allows you to switch between 4 motors and perform operation using the same inverter. Furthermore, operation can be performed by switching the control parameters and control method even for a single motor. These changes are made using terminal commands “M2”, “M3”, and “M4”.
(📖Function codes E01 to E09, data = 12, 36, 37)

Function code	Motor to drive	Remarks
F/E/P codes, etc.	Motor 1	Including function codes commonly applied to motors 1 to 4.
A codes	Motor 2	
b codes	Motor 3	
r codes	Motor 4	

The switching operation with “M2”, “M3”, and “M4” is made in order of priority from motor 1 to 4 using the following combinations. By switching the motor, the respective function codes will change, and the motor will be controlled based on the new function codes. “SWM1”, “SWM2”, “SWM3”, and “SWM4” can be output as digital signals used to indicate the selected motor.
(📖Function codes E20 to E23 and E27, data = 48 to 51)

Digital input signal			Selected motor	Output signal			
“M2”	“M3”	“M4”		“SWM1”	“SWM2”	“SWM3”	“SWM4”
OFF	OFF	OFF	Motor 1	ON	OFF	OFF	OFF
ON	-	-	Motor 2 (A codes)	OFF	ON	OFF	OFF
OFF	ON	-	Motor 3 (b codes)	OFF	OFF	ON	OFF
OFF	OFF	ON	Motor 4 (r codes)	OFF	OFF	OFF	ON

Note Induction motor control only. This manual describes function codes applied to motor 1 only. For ones applied to motors 2 to 4, refer to the corresponding function codes for motor 1 in Table 5.3-2.

Note Synchronous motor control is possible only for motor 1. If changes are not made to the inverter output wiring when switching to induction motor control for motors 2 to 4, synchronous motors will be driven by induction motors, possibly leading to motor damage, and therefore caution is advised.

Note It is necessary to confirm “M2” to “M4” 1 ms before the run command is confirmed.

A42, b42, r42	Motor/parameter switching 2, 3, 4 (Operation selection) Related function code: d25 ASR switching time

Function codes A42, b42, and r42 determine whether the switching operation with “M2”, “M3”, and “M4” actually switches the motor, or switches the control parameters (function codes).

A42/b42/r42 data	Function	Switching condition
0	Motor switching: Switching to motor 2, motor 3 or motor 4	Only while stopped
1	Parameter switching: Switch to control function code data for the same motor such as turning energy saving operation ON and OFF, or changing the speed control system PI	Possible even during operation

If motor switching is set, the function codes in the following table are switched.

Table 5.3-2 Function codes to be switched

Name	Function code				Parameter switching
	Motor 1	Motor 2	Motor 3	Motor 4	
Maximum output frequency	F03	A01	b01	r01	
Base frequency	F04	A02	b02	r02	
Rated voltage at base frequency	F05	A03	b03	r03	
Maximum output voltage	F06	A04	b04	r04	
Torque boost	F09	A05	b05	r05	
Electronic thermal overload protection for motor (Select motor characteristics)	F10	A06	b06	r06	
(Operation level)	F11	A07	b07	r07	
(Thermal time constant)	F12	A08	b08	r08	
DC braking (Braking starting frequency)	F20	A09	b09	r09	
(Operation level)	F21	A10	b10	r10	
(Braking time)	F22	A11	b11	r11	
Starting frequency	F23	A12	b12	r12	
Load selection/auto torque boost /auto energy-saving operation	F37	A13	b13	r13	Y
Starting frequency (Holding time)	F24	A62	b62	r62	
Stop frequency	F25	A63	b63	r63	
Stop frequency (Detection method)	F38	A64	b64	r64	
Stop frequency (Holding time)	F39	A65	b65	r65	
Drive control selection	F42	A14	b14	r14	

FUNCTION
F Codes
E Codes
C Codes
P Codes
H Codes
A Codes
b Codes
r Codes
J Codes
d Codes
U Codes
y Codes
K Codes

Name	Function code				Parameter switching
	Motor 1	Motor 2	Motor 3	Motor 4	
Motor constants (No. of poles)	P01	A15	b15	r15	
(Rated capacity)	P02	A16	b16	r16	
(Rated current)	P03	A17	b17	r17	
(Auto tuning)	P04	A18	b18	r18	
(Online tuning)	P05	A19	b19	r19	
(No-load current)	P06	A20	b20	r20	
(%R1)	P07	A21	b21	r21	
(%X)	P08	A22	b22	r22	
(Slip compensation gain for driving)	P09	A23	b23	r23	Y
(Slip compensation response time)	P10	A24	b24	r24	Y
(Slip compensation gain for braking)	P11	A25	b25	r25	Y
(Rated slip frequency)	P12	A26	b26	r26	
(Iron loss factor 1)	P13	A27	b27	r27	
(Iron loss factor 2)	P14	A28	b28	r28	
(Iron loss factor 3)	P15	A29	b29	r29	
(Magnetic saturation factor 1)	P16	A30	b30	r30	
(Magnetic saturation factor 2)	P17	A31	b31	r31	
(Magnetic saturation factor 3)	P18	A32	b32	r32	
(Magnetic saturation factor 4)	P19	A33	b33	r33	
(Magnetic saturation factor 5)	P20	A34	b34	r34	
(Magnetic saturation expansion coefficient a)	P21	A35	b35	r35	
(Magnetic saturation expansion coefficient b)	P22	A36	b36	r36	
(Magnetic saturation expansion coefficient c)	P23	A37	b37	r37	
(Load inertia)	P24	A38	b38	r38	
Motor selection	P99	A39	b39	r39	
Slip compensation (Operating conditions)	H68	A40	b40	r40	Y
Output current fluctuation damping gain for motor	H80	A41	b41	r41	Y
Speed control (Speed command filter)	d01	A43	b43	r43	Y
(Speed detection filter)	d02	A44	b44	r44	Y
P (Gain)	d03	A45	b45	r45	Y
I (Integral time)	d04	A46	b46	r46	Y
(Feed forward gain)	d05	A47	d47	r47	Y
(Output filter)	d06	A48	b48	r48	Y
(Notch filter resonance frequency)	d07	A49	b49	r49	
(Notch filter attenuation level)	d08	A50	b50	r50	
Speed control (Notch filter width)	d29	A58	b58	r58	
Cumulative motor run time	H94	A51	b51	r51	
Number of startups	H44	A52	b52	r52	

Name	Function code				Parameter switching
	Motor 1	Motor 2	Motor 3	Motor 4	
Motor constant (%X correction factor 1)	P53	A53	b53	r53	
(%X correction factor 2)	P54	A54	b54	r54	
(Torque current under vector control)	P55	A55	b55	r55	
(Induced voltage factor under vector control)	P56	A56	b56	r56	
Display coefficient for speed monitor	E50	A60	b60	r60	
For manufacturer	d51	d52	d53	d54	
	P57	A57	b57	r57	
Constant rate of feeding coefficient / Speed display auxiliary coefficient	E39	A61	b61	r61	
Starting frequency (Holding time)	F24	A62	b62	r62	
Stop frequency	F25	A63	b63	r63	
Stop frequency (Detection method)	F38	A64	b64	64	
Stop frequency (Holding time)	F39	A65	b65	r65	
Thermistor (Operation selection)	H26	A66	b66	r66	
Thermistor (Operation level)	H27	A67	b67	r67	

The function codes listed in the following table are for motor 1, and function codes for motors 2 to 4 are disregarded, but some functions can be enabled with A98, b98, and r98.

Table 5.3-3 Function codes that are disregarded for motor 2 to 4

Content	Function code	Operation for motor 2 onward
Non-linear V/f pattern	H50 to H53, H65, H66	Refer to the description of A98, b98, and r98.
Motor overload early warning	E34, E35	Disable
Droop control	H28	Disable
UP/DOWN control	H61	Fixed at the initial setting (0 Hz)
PID control	J01 to J06, J08 to J13, J15 to J19 J57 to J62, J101 to J199, J201 to J280	Refer to the description of A98, b98, and r98.
Brake control signal	J68 to J72, J95, J96 d120 to d125	Disable
Positioning control	d200 number unit	Disable
Contacting the stopper	J90 to J92	Disable
Current limiter	F43, F44	Refer to the description of A98, b98, and r98.
Rotational direction limitation	H08	Refer to the description of A98, b98, and r98.
Maintenance Interval/ Preset startup count for maintenance	H78, H79	Disable
DC braking (Braking timer at the startup)	H195	Refer to the description of A98, b98, and r98.

Note: If speed control constant selection 1 and 2: “MPRM1”, “MPRM2” have been assigned to an input terminal, the parameter switching function will be disabled, and only the motor switching function will be enabled (normally, A42, b42, r42 = 0).
Parameter switching is performed with a combination of “MPRM1” and “MPRM2”.

Input signal		Selected speed control parameter set
“MPRM2”	“MPRM1”	
OFF	OFF	d01 to d06: speed control constant 1
OFF	ON	A43 to A48: speed control constant 2
ON	OFF	b43 to b48: speed control constant 3
ON	ON	r43 to r48: speed control constant 4

A98, b98, r98	Motor 2, Motor 3, Motor 4 (Function selection)

Setting range: 0 to 255 (decimal setting)

Of the functions disabled for motor 2 onward shown in “Table 5.3-3 Function codes that are disregarded for motor 2 to 4”, the following functions can be enabled.

Bit	Function	Data = 0	Data = 1	Remarks
Bit 0	Current limiter (F43, F44)	Disable	Enable	
Bit 1	Rotation direction limit (H08)	Disable	Enable	
Bit 2	Non-linear V/f (H50 to H53, H65, H66)	Disable	Enable	
Bit 3	PID control (J01 to J62, H91)	Disable	Enable	Note)
Bit 4	Brake control signal	Disable	Enable	
Bit 5	DC braking (braking time at startup) (H195)	Disable	Enable	
Bit 6, 7	No function assigned	-	-	

Note) This bit setting does not affect function codes relating to PID control 1 or 2.

5.3.8 b, r codes (Speed control 3 and 4 parameters)

FRENIC-MEGA has four sets of speed control parameter. They can be selected by “MPRM1”, “MPRM2” signals. The selection with speed control selection signals “MPRM1” and “MPRM2” takes priority over the selection made with “M2”, “M3”, and “M4”.

For the description of speed control parameters, refer to function code d01.

Name		Speed control parameter set			
		Set 1	Set 2	Set 3	Set 4
Speed control	(Speed command filter)	d01	A43	b43	r43
	(Speed detection filter)	d02	A44	b44	r44
	(P gain)	d03	A45	b45	r45
	(Integral time)	d04	A46	b46	r46
	(Feed forward gain)	d05	A47	b47	r47
	(Output filter)	d06	A48	b48	r48

■ **Select speed control parameter 1, 2 -- “MPRM1”, “MPRM2” (E01 to E05 data = 78, 79)**

The combination of the ON/OFF states of digital input signals “MPRM1” and “MPRM2” selects one among 4 different speed control parameter sets. d01 to d08 and A43 to A50 can be changed even when switching the motor with “M2”.

Input signal		Selected speed control parameter set
“MPRM2”	“MPRM1”	
OFF	OFF	d01 to d06: Speed control constant 1
OFF	ON	A43 to A48: Speed control constant 2
ON	OFF	b43 to b48: Speed control constant 3
ON	ON	r43 to r48: Speed control constant 4

FUNCTION
F Codes
E Codes
C Codes
P Codes
H Codes
A Codes
b Codes
r Codes
J Codes
d Codes
U Codes
y Codes
K Codes

5.3.9 J codes (Applied functions)

J01	PID control (operation selection) Related function codes J101 : PID Control1 (Mode selection) *101 J201 : PID Control2 (Mode selection) *101

Under PID control, the inverter detects the state of a control target object with a sensor or similar device and compares it with the commanded value (e.g., temperature control command). If there is any deviation between them, PID control operates so as to minimize it. That is, it is a closed loop feedback system that matches a controlled variable (feedback amount).

PID control expands the application area of the inverter to process control (e.g., flow control, pressure control, and temperature control) and speed control (e.g., dancer control).

If PID control is enabled (J01 = 1, 2 or 3), the frequency control of the inverter is switched from the drive frequency command generator block to the PID command generator block.

If J01 ≠ 0, the J01 function is prioritized, and J101/J201 are disabled.

If using PID control with functionality expanded to process control such as flow rate control and temperature control including flow sensor input and Anti Jam Function, use PID control 1 (J01) or PID control 2 (J201). *101: A list of setting items for PID control and PID control 1/PID control 2 are shown in the following table.

Table 5.3-4 PID control setting item list

Function code name	PID control	PID control 1	PID control 2
Mode selection	J01	J101	J201
Command selection	J02	J102	J202
Feedback selection	※	J103	J203
Deviation selection	Disabled	J104	Disabled
Display unit	J105		J205
Maximum scale / Minimum scale	J106, J107		J206, J207
P (gain)	J03	J110	J210
I (Integral time)	J04	J111	J211
D (Differential time)	J05	J112	J212
Feedback filter	J06	J113	J213
Anti-reset wind-up	J10	J114	J214
Upper limit / Lower limit of PID process output	J18, J19	J118, J119	J218, J219
Alarm output selection	J11, J12, J13	J121, J122, J124	J221 to J225
Dancer position control	J57 to J62	Disabled	Disabled
Feedback failure detection	Disabled	J127 to J131	J227 to J231
PID Auto-tuning	J108, J109		J208, J209
PID Multistep command	J136 to J138		
Slow Flowrate Stop Function	J15, J16, J17, J23, J24 (5th item)	J149 to J154 J156 to J160 (11th item)	J249 to J251 J256 to J260 (8th item)
Flow Sensor	Disabled	J163 to J166	
Filter Clogging Prevention	Disabled	J188 to J195	Disabled
Anti Jam Func.	Disabled	J188 to J195	
Wet-bulb temperature presumption control	Disabled	J198	Disabled
PID control (operation selection)	Disabled	Enabled	

※ Analog input is normally selected.
*101: Supported with ROM0500 or later.

■ **Mode selection (J01)**

J01 selects the PID control operation and control block.

J01 data	Function
0	Disable
1	Process control (normal operation)
2	Process control (inverse operation)
3	Speed control (dancer control)

<PID process control block diagram>

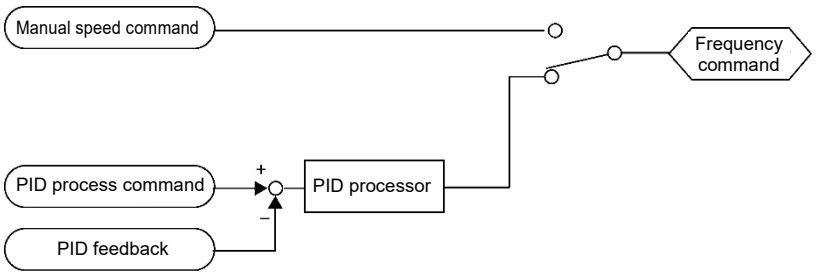

<PID dancer control block diagram>

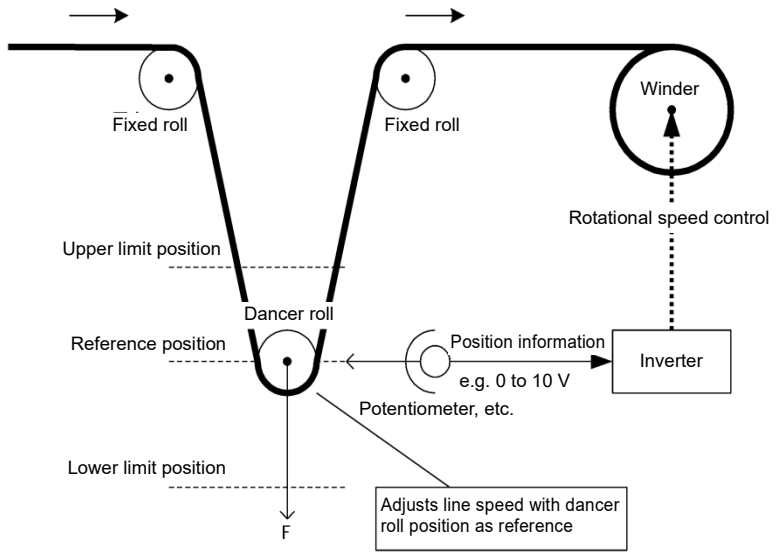

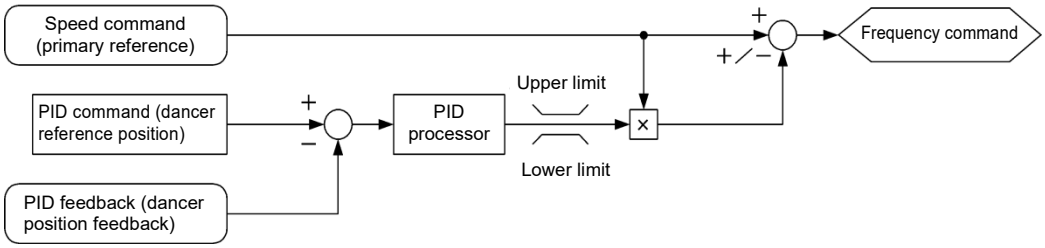

・Using J01 allows switching between normal and inverse operations for the PID control output, so you can specify an increase/decrease of the motor rotating speed depending on the difference (error component) between the commanded (input) and feedback amounts, making it possible to apply the inverter to air conditioners. The terminal command IVS can also switch operation between normal and inverse.

📖 For details about the switching of normal/inverse operation, refer to the description of "■ Normal/inverse operation switching "IVS" assignment" (E01 to E09, data = 21).

FUNCTION
F Codes
E Codes
C Codes
P Codes
H Codes
A Codes
b Codes
r Codes
J Codes
d Codes
U Codes
y Codes
K Codes

J02 **J102,** **J201**	**PID control (remote command)** **PIDcontrol 1,2 (Command selection)** **(J102, J201) *101** **Related function codes** **J105: PID control (Display unit)** **J106: PID control (Maximum scale)** **J107: PID control (Minimum scale)** **J136 to J138: PID control multistep command 1 to 3**

*101: Supported with ROM0500 or later.

Select the method used to set PID control command values.

J02	J102 *101	J202 *101	Function
0	0	0	PID command with keypad PID command with keypad ▲/▼ keys
1	1	1	PID command , PID command 1,2 (Analog input: Terminals [12], [V2], [C1] (C1 function), [C1] (V3 function)) Voltage input to terminal [12], [V2], [C1] (V3 function) (0 to ±10 VDC, 100% PID command/±10 VDC) Current input to terminal [C1] (C1 function) (4 to 20 mA DC, 100% PID command/20 mA DC)
-	-	2	PID command 2 (Analog input: Terminals [12], [V2], [C1] (C1 function), [C1] (V3 function)) Voltage input to terminal [12], [V2], [C1] (V3 function) (0 to ±10 VDC, 100% PID command/±10 VDC) Current input to terminal [C1] (C1 function) (4 to 20 mA DC, 100% PID command/20 mA DC)
3	3	3	Terminal command UP/DOWN Using the “UP” or “DOWN” command in conjunction with PID minimum scale to maximum scale (specified by J106 and J107) with which the command value is converted into a physical quantity, etc., you can specify 0 to 100 % of the PID command (± 100% for PID dancer control).
4	4	4	Command via communications link Use function code S13 to specify the PID command by communications. The transmission data of 20000d (decimal) is equal to 100% (maximum set point value) of the PID command.
-	-	101	Use a PID control 1 command (J102).

[1] PID command with keypad (J02 = 0, J102, J202 = 0)

Using the ▲/▼ keys on the keypad in conjunction with PID minimum / maximum scale (specified by J106, J107, J206 and J207), you can specify 0 to 100 % of the PID command (±100 % for PID dancer control) in an easy-to-understand, converted command format.

For details of operation, refer to Chapter 3 “3.3.6 Setting up PID commands from the keypad.”

[2] PID command by analog inputs (J02=1, J102 = 1, J202 = 1,2)

The desired value can be set for the PID command value by analog input by multiplying by the gain and adding the bias. The polarity can be selected and the filter time constant and offset can be adjusted.
In addition to J02, J102, and J202 settings, it is also necessary to select PID command 1 for each analog input setting (function codes E61 to E63 and E66).
For details, refer to the descriptions for function codes E61 to E63 and E66.

Table 5.3-23 Adjustable elements of PID command

Input terminal	Input range	Common bias		Individual bias		Gain		Polarity selection	Filter	Offset
		Bias	Base point	Bias	Base point	Gain	Base point			
[12]	0 to +10 V, -10 to +10 V	C51	C52	C55	C56	C32	C34	C35	C33	C31
[C1] (C1 function)	4 to 20 mA, 0 to 20 mA			C61	C62	C37	C39	C40	C38	C36
[V2]	0 to +10 V, -10 to +10 V			C67	C68	C42	C44	C45	C43	C41
[C1] (V3 function)	0 to +10 V, -10 to +10 V			C82	C83	C75	C77	C78	C76	C74

Both the common bias and individual bias function.

■ Offsets (C31, C36, C41, C74)

C31, C36, C41 or C74 configures an offset for an analog voltage/current input. The offset also applies to signals sent from the external equipment.

■ Filters (C33, C38, C43, C76)

C33, C38, C43 and C76 provide the filter time constants for the voltage and current of the analog input. The larger the time constant, the slower the response. Specify the proper filter time constant taking into account the response speed of the machine (load). If the input voltage fluctuates due to line noises, increase the time constant.

■ Polarity selection (C35, C45, C78)

C35, C45 and C78 configures the polarity and therefore the input range for analog input voltage.

C35, C45, C78 data	Terminal [12], [V2], [C1] (V3 function) input specifications
0: Bipolar	-10 to +10 V
1: Unipolar	0 to +10 V (Negative value of voltage is regarded as 0 V)

■ Range / polarity selection for terminal [C1] (C1 function) (C40)

C40 configures the input range for analog input current of terminal [C1] (C1 function).
This allows analog current input to be handled as bipolar data with 12 mA or 10 mA set to 0 by setting to 10 or 11, and compensating with the gain and bias.

C40 data	Terminal input range	Handling when bias value is set to minus
0: Unipolar	4 to 20 mA	Limit below 0 point with 0
1: Unipolar	0 to 20 mA	
10: Bipolar	4 to 20 mA	Enable below 0 point as minus value.
11: Bipolar	0 to 20 mA	

■ **Gain and bias**

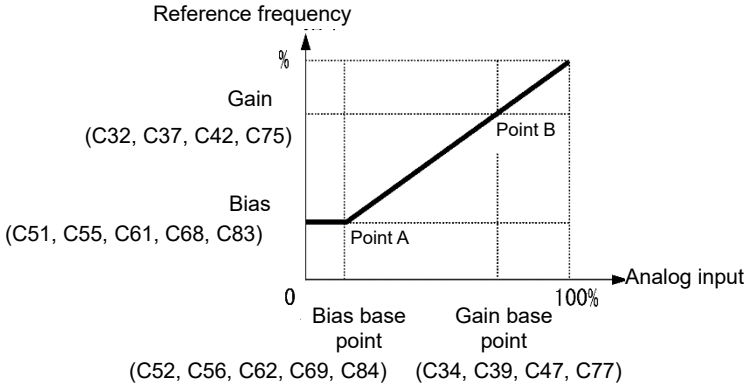

(Example) In order to allocate for the range of 0 to 100 % to the range of 1 to 5 V at terminal [12], set as follows.

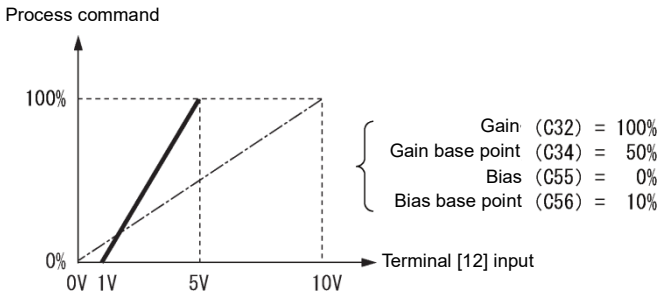

[3] PID command with UP/DOWN control (J02 = 3)

When UP/DOWN control is selected as a PID speed command, turning the terminal command “UP” or “DOWN” ON causes the PID set point value to change within the range from minimum scale to maximum scale.

Settings can be specified in physical system units with display units (J105/J205), maximum scale (J106/J206), and minimum scale (J107/J207).

To select UP/DOWN control as a PID set point value, the “UP” and “DOWN” should be assigned to the digital input terminals. (🕮 Function codes E01 to E09 data = 17, 18)

“UP”	“DOWN”	Enable
Data = 17	Data = 18	
OFF	OFF	Retain PID set point value.
ON	OFF	Increase PID set point value at a rate between 0.1%/0.1 s and 1%/0.1 s.
OFF	ON	Decrease PID set point value at a rate between 0.1%/0.1 s and 1%/0.1 s.
ON	ON	Retain PID set point value.

Note The inverter internally holds the PID command value set by UP/DOWN control and applies the held value at the next restart (including powering ON).

[4] PID command via communications link (J02 = 4, J102, J202 = 4)

Use function code S13 to specify the PID command by communications. The transmission data of 20000d (decimal) is equal to 100% (maximum set point value) of the PID command. For details of the communications format, refer to the RS-485 Communication User's Manual.

Note
- Other than the remote command selection by J02, the PID multistep commands 1, 2 or 3 (specified by J136, J137 or J138, respectively) selected by the PID multistep commands "PID-SS1" and "PID-SS2" can also be used as preset set point values for the PID command.
- In dancer control (J01 = 3), the setting command from the keypad is in conjunction with the function code J57 (PID control: Dancer position set point), and it is saved as function code data.

Selecting feedback terminals

For feedback control, determine the connection terminal according to the type of the sensor output.

- If the sensor is a current output type, use the current input terminal [C1] (C1 function) of the inverter.
- If the sensor is a voltage output type, use inverter voltage input terminal [12], [V2], or [C1] (V3 function).

For details, refer to the descriptions of E61 to E63 and E66.

<Application example: Process control> (for air conditioners, fans and pumps)

The operating range for PID process control is internally controlled as 0% through 100 %. For the given feedback input, determine the operating range to be controlled by means of gain adjustment.

Example: When the external sensor has the output range of 1 to 5 V:

- Use terminal [12] as the input terminal in voltage.
- Set the gain (C32 for analog input adjustment) to 200 % in order to make 5 V of the maximum output of the external sensor to be 100% of input scale. For the input specification of terminal [12], 0-10 V is equivalent to 0-100%. Therefore the gain has to be set 200 % (= 10 V / 5 V *100). Note also that any bias setting does not apply to feedback control.

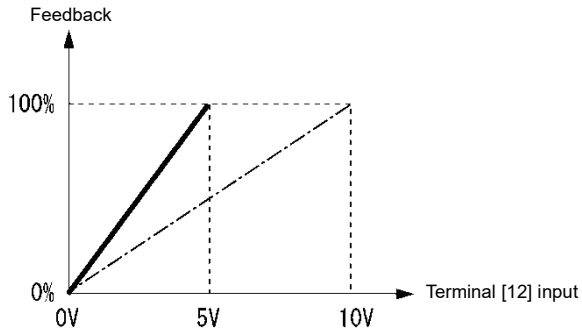

FUNCTION
F Codes
E Codes
C Codes
P Codes
H Codes
A Codes
b Codes
r Codes
J Codes
d Codes
U Codes
y Codes
K Codes

<Application examples: Dancer control> (for winders)

Example 1: When an external sensor has the output range of -7 to +7 VDC:

- Use terminal [12] as the input terminal in voltage.
- When the external sensor has ±7 VDC of bipolar output, inside the inverter ±7 VDC should be equivalent to ±100%. To convert ±7 VDC from the output of an external sensor to ±100%, the gain (C32 for analog input adjustment) has to be set 143% (≈ 10 V / 7 V *100).

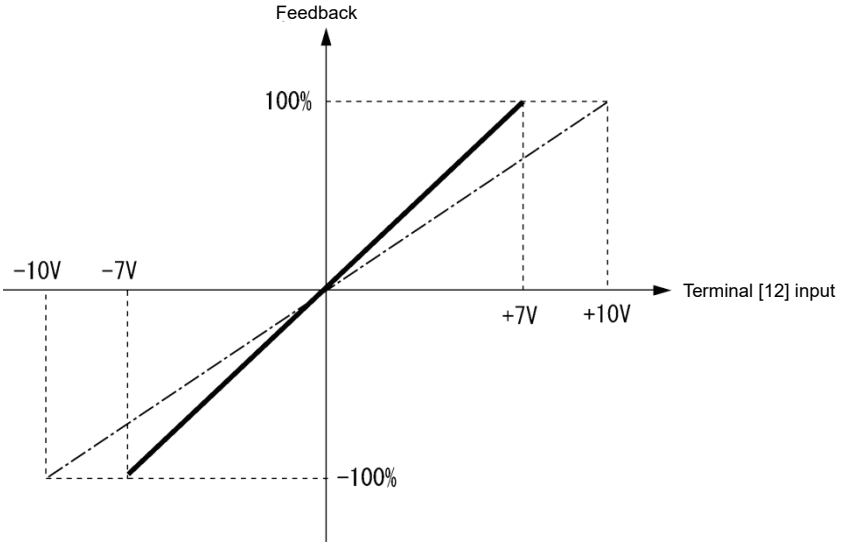

Example 2: When an external sensor has the output range of 0 to 10 VDC:

- Use terminal [12] as the input terminal in voltage.
- When the external sensor has unipolar output, inside the inverter it is controlled within the range of 0 to 100 %.

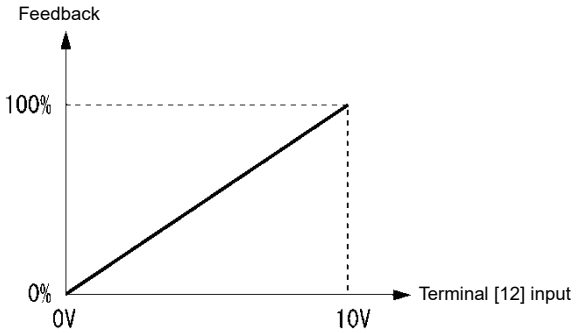

In this example, it is recommended that the dancer reference position is set around the 5 V (50 %) point.

J03, J110, J210	**PID Control, PID Control 1,2**	**P (gain)**
J04, J111, J211	**PID Control, PID Control 1,2**	**I (Integral)**
J05, J112, J212	**PID Control, PID Control 1,2**	**D (Differential)**
J06, J113, J213	**PID Control, PID Control 1,2**	**Feedback filter**
		(J110 to J113, J210 to J213) *101
		Related function codes: J59: P (Gain) 2
		J60: I (Integral time) 2
		J61: D (Differential time) 2

*101: Supported with ROM0500 or later.

■ **P gain (J03, J110, J210)**

These function codes set the PID controller gain.

- Data setting range: 0.000 to 30.000 (times)

P (Proportional) action

An operation in which the MV (manipulated value: output frequency) is proportional to the deviation is called P action, which outputs the MV in proportion to deviation. However, P action alone cannot eliminate deviation.

Gain is data that determines the system response level against the deviation in P action. An increase in gain speeds up response, but an excessive gain may oscillate the inverter output. A decrease in gain delays response, but it stabilizes the inverter output.

It may be necessary to adjust the P gain when performing dancer control based on differences in machine inertia associated with thick winding and thin winding, or if there is a large deviation from the reference position when the dancer starts.

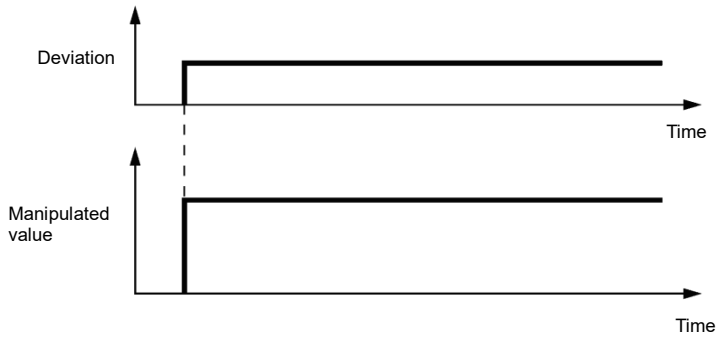

■ I integral time (J04, J111, J211)

These function codes set the PID controller integral time.

- Data setting range: 0.0 to 3600.0 (s)
  0.0 indicates that the integral component is ineffective

I (Integral) action

An operation in which the change rate of the MV (manipulated value: output frequency) is proportional to the integral value of deviation is called I action, which outputs the MV that integrates the deviation. Therefore, I action is effective in bringing the feedback value close to the commanded value. For the system whose deviation rapidly changes, however, this action cannot make it respond quickly.

The effectiveness of the I action is indicated by expressing the integral time as a parameter. The longer the integral time, the slower the response. The response to external forces is also delayed. The shorter the integral time, the faster the response, but by setting too short an integral time, inverter output tends to oscillate in response to changes in external forces..

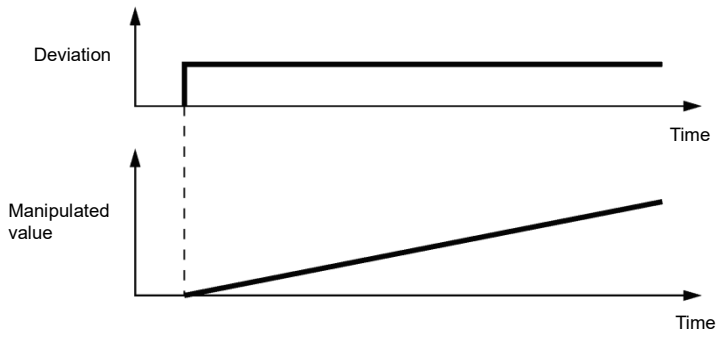

■ D differential time (J05, J112, J212)

These function codes set the PID controller differential time.

- Data setting range: 0.00 to 600.00 (s)
  0.00 indicates that the differential component is ineffective.

D (Differential) action

An operation in which the MV (manipulated value: output frequency) is proportional to the differential value of the deviation is called D action, which outputs the MV that differentiates the deviation. D action makes the inverter quickly respond to a rapid change of deviation.

The effectiveness of the D action is indicated by expressing the differential time as a parameter. Increasing the differential time quickly suppress vibrations caused by the P action performed when a deviation occurs. Too long a differential time tends to lead to greater vibrations. Reducing the differential time weakens the suppression effect produced when deviations occurs.

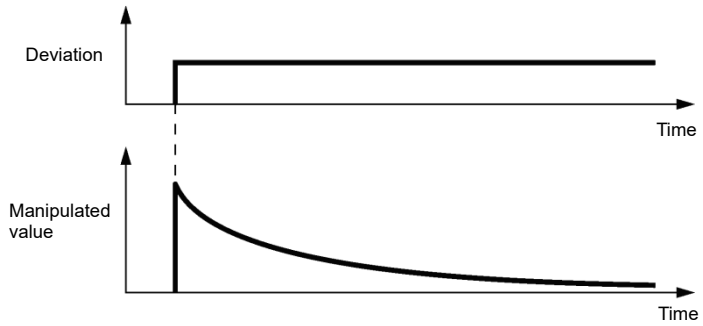

The combined uses of P, I, and D actions are described below.

(1) PI control

PI control, which is a combination of P and I actions, is generally used to minimize the remaining deviation caused by P action. PI control always acts to minimize the deviation even if a commanded value changes or external disturbance steadily occurs. However, the longer the integral time of I action, the slower the system response to quick-changed control. P action can be used alone for loads with very large part of integral components.

(2) PD control

In PD control, the moment that a deviation occurs, the control rapidly generates greater MV (manipulated value: output frequency) than that generated by D action alone, to suppress the deviation increase. When the deviation becomes small, the behavior of P action becomes small. A load including the integral component in the controlled system may oscillate due to the action of the integral component if P action alone is applied. In such a case, use PD control to reduce the oscillation caused by P action, for keeping the system stable. That is, PD control is applied to a system that does not contain any damping actions in its process.

(3) PID control

PID control is implemented by combining P action with the deviation suppression of I action and the oscillation suppression of D action. PID control features minimal control deviation, high precision and high stability. In particular, PID control is effective to a system that has a long response time to the occurrence of deviation.

Follow the procedure below to set data to PID control function codes.

It is highly recommended that you adjust the PID control value while monitoring the system response waveform of the PID feedback with an oscilloscope or equivalent. Repeat the following procedure to determine the optimal solution for each system.

- Increase the PID control (gain) function code data within the range in which feedback signals do not oscillate.
- Increase the PID control (integral time) function code data within the range in which feedback signals do not oscillate.
- Increase the PID control (differential time) function code data within the range in which feedback signals do not oscillate.

FUNCTION
F Codes
E Codes
C Codes
P Codes
H Codes
A Codes
b Codes
r Codes
J Codes
d Codes
U Codes
y Codes
K Codes

The method for refining the system response from the waveforms is shown below.

1) Suppressing overshoot

Increase the integral time function code data, and decrease the differential time function code data.

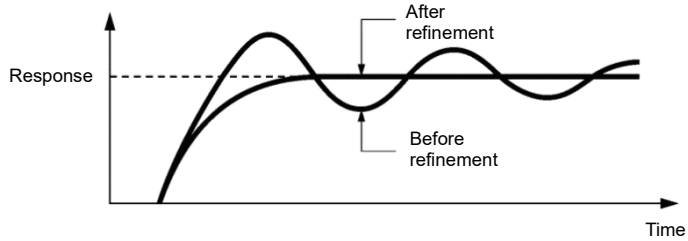

2) Quick stabilizing (Moderate overshoot is allowable.)

Decrease the gain function code data, and increase the differential time function code data.

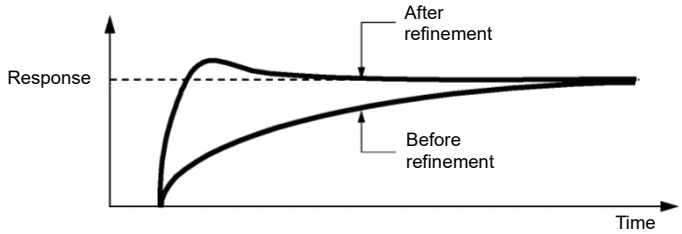

3) Increase the integral time function code data.

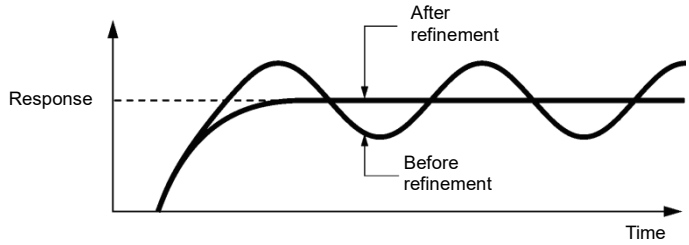

4) Decrease the differential time function code data. If unable to suppress vibrations even by setting the differential time to "0" seconds, decrease the gain function code data.

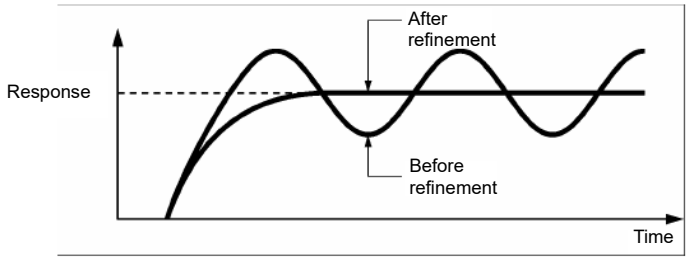

■ **Feedback filter (J06, J113, J213)**

These function codes set the PID controller feedback filter time.

- Data setting range: 0.0 to 900.0 (s)
- This setting is used to stabilize the PID control loop. Setting a too long time constant makes the system response slow.

Note

When speed control (dancer) is selected (J01 ≠ 3 → = 3), the J06 setting value automatically changes to 0.0 s.

To specify the filter time constant in detail, apply an analog input filter (C33, C38 and C43). When speed control (dancer) is not selected (J01 = 3 → ≠ 3), the J06 setting value automatically changes to 0.5 s. Set J06 after setting J01.

J08, J09	PID control (Pressurization frequency, Pressurization time) Related function codes: J15 (Low liquid level stop operating frequency level) J16 (Low liquid level stop elapsed time) J17 (Starting frequency) J23 (Low liquid level stop/start feedback deviation) J24 (Low liquid level stop/start delay time)

Low liquid level stop function (J15 to J17, J23, J24)

Function codes J15 to J17 configure the sleep function in pump control, a function that stops the inverter when the discharge pressure increases, causing the volume of water to decrease.

When the discharge pressure has increased, decreasing the reference frequency (output of the PID processor) below the sleep level (J15) for the period specified sleep timer (J16), the inverter decelerates to stop, while PID control itself continues to operate. When the discharge pressure decreases, increasing the reference frequency (output of the PID processor) above the wakeup frequency (J17), the inverter resumes operation.

The restarting conditions can be adjusted with J23 and J24.

■ PID control (Sleep frequency) (J15)

J15 specifies the frequency which triggers slow flowrate stop of inverter.

■ PID control (Sleep timer) (J16)

J16 specifies the period from when the PID output drops below the frequency specified by J15 until the inverter starts deceleration to stop.

■ PID control (Wakeup frequency) (J17)

J17 specifies the wakeup frequency. Set J17 to a frequency higher than the sleep frequency (J15). If the specified wakeup frequency is lower than the sleep frequency, the sleep frequency is ignored; the sleep function is triggered when the output of the PID processor drops below the specified wakeup frequency.

■ PID low liquid level stop “PID-STP” assignment (Function code E20 to E24, E27, data = 44)

“PID-STP” (“Under sleep mode of PID control”) is ON when the inverter is in a stopped state due to the sleep function under PID control. PID-STP should be assigned if it is necessary to output a signal to indicate that the inverter is stopped.

For the sleep function, see the chart below.

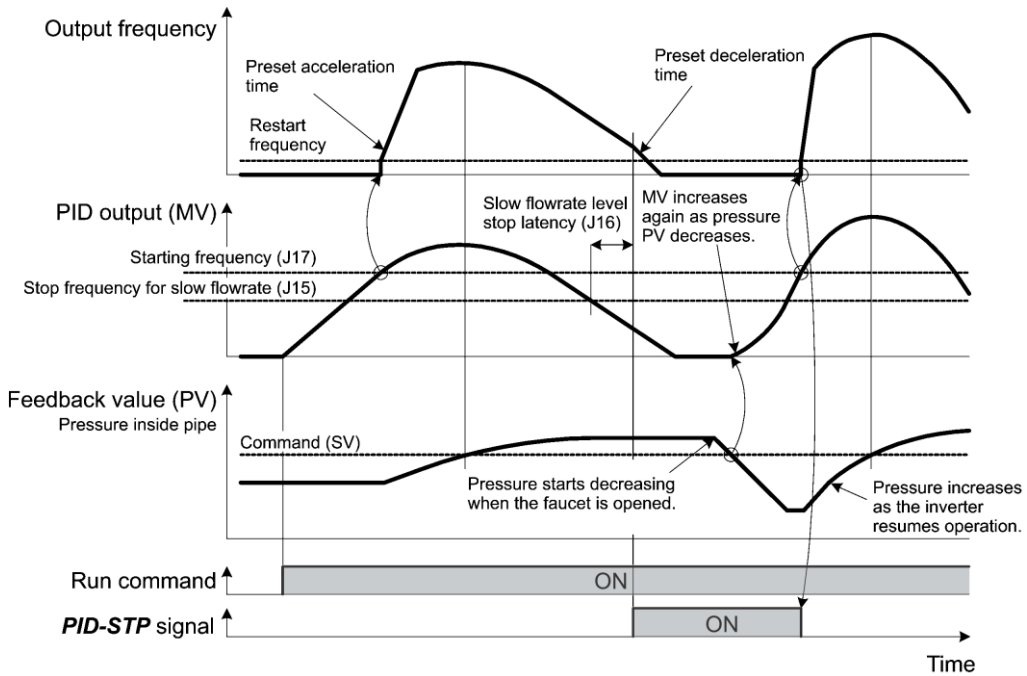

FUNCTION
F Codes
E Codes
C Codes
P Codes
H Codes
A Codes
b Codes
r Codes
J Codes
d Codes
U Codes
y Codes
K Codes

■ **PID control (Wakeup level of PID error) (J23)**

■ **PID control (Wakeup timer) (J24)**

When both of the two conditions below are satisfied (AND), the inverter is restarted.

- The discharge pressure has decreased, increasing the frequency (output of the PID processor) to or above the wakeup frequency (J17) and the wakeup timer (J24) has elapsed.
- The absolute error of the PV (feedback value) against to the SV (command value) is equal to or higher than the wakeup level of PID error (J23), and the wakeup time (J24) has elapsed.

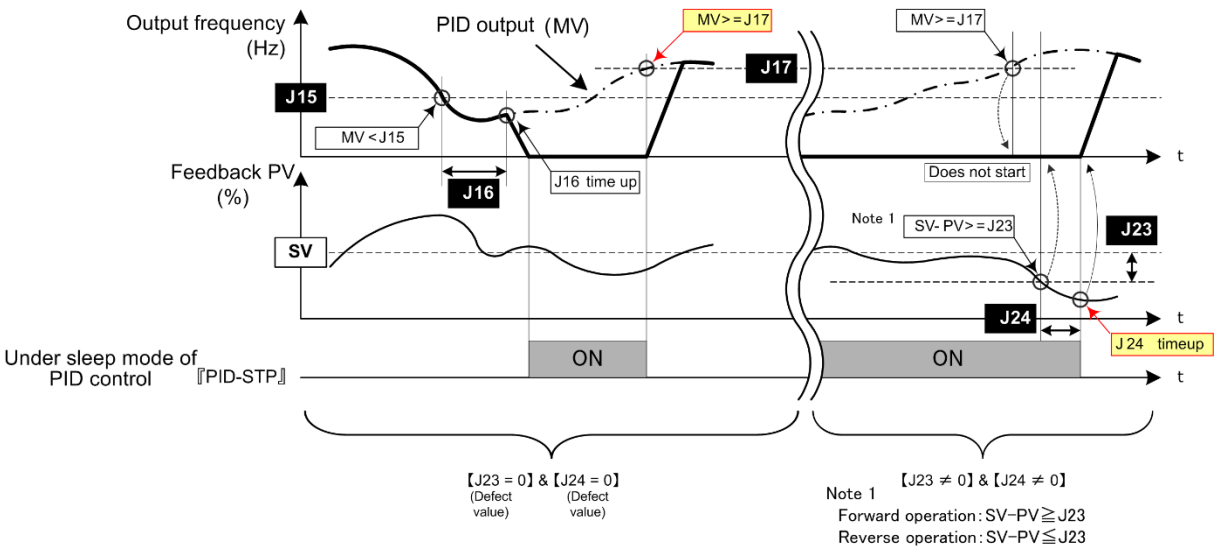

Low liquid level stop pressurization function (J08, J09)

By setting the pressurization frequency (J08) and pressurization time (J09), pressurization control is performed after the low liquid level stop elapsed time (J16) at the low liquid level stop operating frequency level (J15) or less. Hold is applied to PID control during pressurization.

On equipment with bladder tank, by using this function to apply pressure immediately before stopping to raise the pressure, it is possible to increase the stopping time to longer than normal, realizing energy-saving operation.

By being able to adjust the pressurization frequency in the parameters, a pressure level appropriate to the equipment status can be set.

Refer to the following diagram for details on settings and operation.

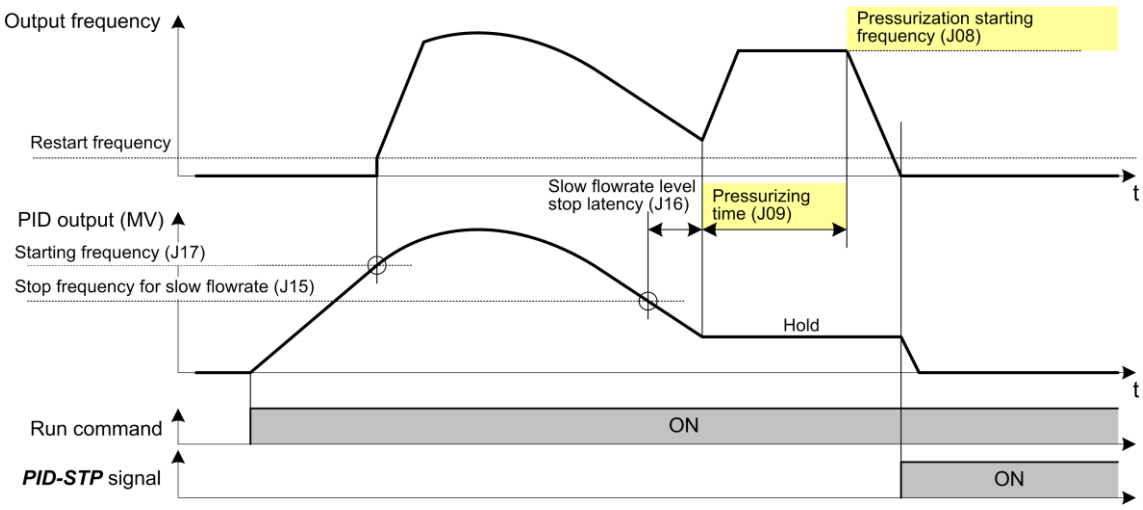

J10 J114, J214	PID control (Anti-reset windup) PID control 1, 2 (Anti-reset windup) *101

*101: Supported with ROM0500 or later.

Suppresses overshoot in control performed with the PID controller. As long as the error between the command and feedback values lies outside the set value range, the integrator holds the value, and does not perform integration.

- Data setting range: 0 to 200(%)

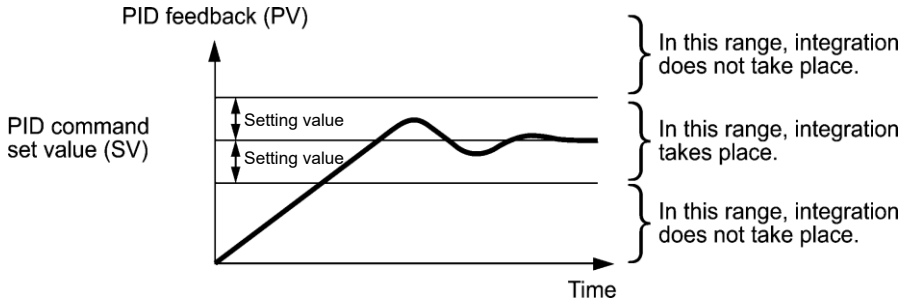

J11 to J13	PID Control (Select warning output, Upper limit of warning (AH) and Lower limit of warning (AL))

The inverter can output two types of warning signals (caused by process command value or PID error value) associated with PID control if the Digital output signal “PID-ALM” is assigned to any of the programmable, output terminals with any of E20 to E24, and E27 (data = 42).

J11 specifies the warning output types. J12 and J13 each specify the upper and lower limits for warnings.

■ PID Control (Select warning output) (J11)

Sets the warning type. J11 specifies one of the following alarms available.

J11 data	Alarm	Content
0	Warning caused by process command value	While PV < AL or AH < PV, “PID-ALM” is ON 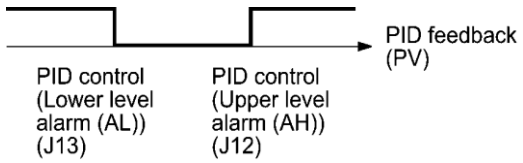
1	Warning caused by process command value with hold	Same as above (with Hold)
2	Warning caused by process command value with latch	Same as above (with Latch)
3	Warning caused by process command value with hold and latch	Same as above (with Hold and Latch)
4	Warning caused by PID error value	While PV < SV - AL or SV + AH < PV, “PID-ALM” is ON. 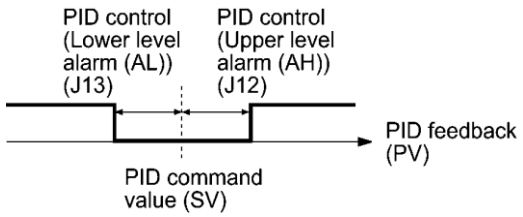
5	Warning caused by PID error value with hold	Same as above (with Hold)
6	Warning caused by PID error value with latch	Same as above (with Latch)
7	Warning caused by PID error value with hold and latch	Same as above (with Hold and Latch)

Hold: During the power-on sequence, the alarm output is kept OFF (disabled) even when the monitored quantity is within the alarm range. Once it goes out of the alarm range, and comes into the alarm range again, the alarm is enabled.

Latch: Once the monitored quantity comes into the alarm range and the alarm is turned ON, the alarm will remain ON even if it goes out of the alarm range. To release the latch, perform a reset by using the PRG RESET key on keypad or turning the terminal command RST ON. Resetting can be done by the same way as resetting an alarm.

■ PID Control (Upper limit of warning (AH)) (J12)

J12 specifies the upper limit of warning (AH) in percentage (%) of the feedback value.

■ PID Control (Lower limit of warning (AL)) (J13)

J13 specifies the lower limit of warning (AL) in percentage (%) of the feedback value.

Note The value displayed (%) is the ratio of the upper/lower limit to the full scale (10 V or 20 mA) of the feedback amount (in the case of a gain of 100 %).

Upper limit of warning (AH) and lower limit of warning (AL) also apply to the following alarms.

Alarm	Content	How to handle the warning	
		Select warning output (J11)	Data setting
Upper limit (process command)	ON when J12(AH) < PV	Warning caused by process command value	J13(AL) = 0
Lower limit (process command)	ON when PV < J13(AL)		J12(AH) = 100%
Upper limit (PID error value)	ON when SV + J12(AH) < PV	Warning caused by PID error value	J13(AL) = 100%
Lower limit (PID error value)	ON when PV < SV - J13(AL)		J12(AH) = 100%
Upper/lower limit (PID error value)	ON when |SV - PV| > J13(AL)		J13(AL) = J12(AH)
Upper/lower range limit (PID error value)	ON when SV - J13(AL) < PV < SV + J13(AL)	Warning caused by PID error value	A negative logic signal should be assigned to “PID-ALM”.
Upper/lower range limit (process command)	ON when J13(AL) < PV < J12(AH)	Warning caused by process command value	
Upper/lower range limit (PID error value)	ON when SV - J13(AL) < PV < SV + J12(AH)	Warning caused by PID error value	

J15 to J17	PID control (Low liquid level stop operating frequency level, Low liquid level stop elapsed time, Starting frequency)

Refer to the J08 item.

J18, J118, J218 J19, J119, J219	PID control, PID control 1,2 (PID output limiter upper limit) PID control, PID control 1,2 (PID output limiter lower limit) (J118, J119, J218, J219) *101

The upper and lower limiters can be specified to the PID output, exclusively used for PID control. The settings are ignored when PID cancel “Hz/PID” is enabled and the inverter is operated at the reference frequency previously specified.
(📖 Function codes E01 to E09 data = 20)

■ **PID Control (Upper limit of PID process output) (J18, J118, J218)**

Specifies the upper limit for the PID controller output limiter as a percentage (%). If a value of “999” is specified, the setting for the frequency limiter (upper limit) (F15) will serve as the upper limit.

■ **PID Control (Lower limit of PID process output) (J19, J119, J219)**

Specifies the lower limit for the PID controller output limiter as a percentage (%). If a value of “999” is specified, the setting for the frequency limiter (lower limit) (F16) will serve as the lower limit.

J21	Condensation prevention (Duty)

The motor temperature can be raised while the inverter is stopped to prevent condensation forming by supplying DC current for a fixed period of time.
This function does not work when a synchronous motor is selected.

■ **Enable conditions**

By turning on condensation prevention “DWP” while the inverter is stopped, the condensation prevention function is started.
(Function codes E01 to E09, data = 39)

■ **Condensation prevention (Duty) (J21)**

The current flowing to the motor is based on DC braking 1 (operation level) (F21), and duty control is performed based on the condensation prevention duty (J21) ratio corresponding to DC braking 1 (time) (F22).

$$\text{Dew condensation prevention duty (J21)} = \frac{\text{DC brake (time) (F22)}}{T} \times 100$$

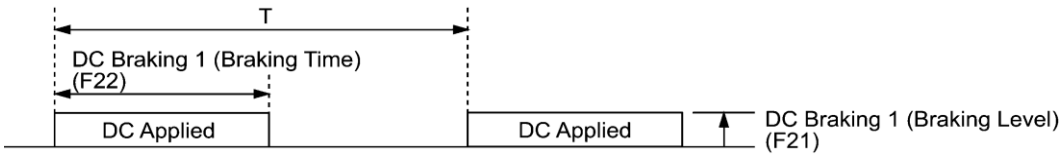

Condensation prevention operation

J22	Switch to commercial power sequence (Refer to E01 to E09)

Refer to the function code E01 to E09 switch to commercial power built-in sequence “ISW50” and “ISW60” items for a detailed explanation of the switch to commercial power sequence setting.

J23, J24	PID control (Low liquid level stop starting feedback deviation, Low liquid level stop startup delay time)

Refer to the J08 item.

J57	PID Control (Dancer position set point) Related function codes: d150 PID Control (Dancer upper limit warning position) d151 PID Control (Dancer lower limit warning position)

J57 specifies the dancer position set point in the range of -100 % to +100 % for dancer control. If J02 = 0 (keypad) is selected, this function code is applied for the dancer position set point.

It is also possible to modify the set point (PID command) with the ▲/▼ keys on the keypad. If modified, the new set point value is stored as J57 data automatically.

For the setting procedure of the set point (PID command), refer to Chapter 3 “3.3.6 Setting PID commands with the keypad.”

■ **Dancer upper limit warning signal “D-UPFL” assignment (Function code E20 to E24, E27, data = 135)**

■ **Dancer lower limit warning signal “D-DNFL” assignment (Function code E20 to E24, E27, data = 136)**

■ **Dancer position limit warning signal “D-FL” assignment (Function code E20 to E24, E27, data = 137)**

■ **Dancer upper/lower limit warning output (d150, d151)**

A dancer position upper limit position warning, lower limit position warning, and upper/lower limit position warning can be output when performing dancer control. The upper/lower limit position settings are specified in the -100% to +100% range in d150 and d151, respectively.

		Setting range
d150	PID control dancer upper limit warning position	-100.0 to 100.0%
d151	PID control dancer lower limit warning position	-100.0 to 100.0%

Output conditions for dancer position upper/lower limit warning signals

E20 to E24, E27	Operating condition 1	Operating condition 2
“D-UPFL” (Setting value: 135)	This is valid when the dancer position enters the intermediate position detection range (J57 ±J58) after operation starts.	ON when dancer position > dancer upper limit warning position [d150]
		OFF when dancer position ≤ dancer upper limit warning position [d150]
“D_DNLF” (Setting value: 136)		ON when dancer position < dancer lower limit warning position [d151]
		OFF when dancer position ≥ dancer lower limit warning position [d151]
“D_LF” (Setting value: 137)		ON when “D_UPLF” = ON or D_DNLF = ON
		OFF when “D_UPLF” = OFF and D_DNLF = OFF

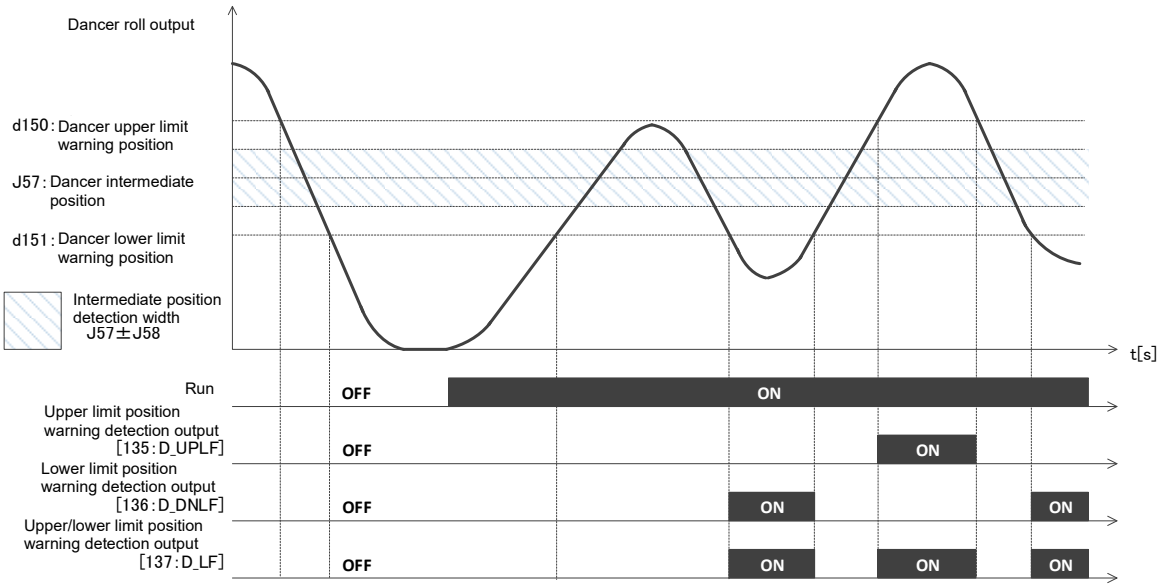

J58 J59 to J61	PID Control (Detection width of dancer position error) PID Control (P (Gain) 2, I (Integral time) 2 and D (Differential time) 2)

When the feedback value of dancer roll position comes into the range of “Detection width of dancer position error (J58)” the inverter switches PID constants from the combination of J03, J04 and J05 to that of J59, J60 and J61, respectively in its PID processor. Giving a boost to the system response by raising the P gain may improve the system performance in the dancer roll positioning accuracy.

■ **PID Control (Detection width of dancer position error) (J58)**

J58 specifies the bandwidth in the range of 1 to 100 %. Specifying “0” does not switch PID constants.

■ **PID control P (Gain) 2 (J59)**

■ **PID control I (Integral time) 2 (J60)**

■ **PID control D (Differential time) 2 (J61)**

These are the same as PID control P (Gain), I (Integral time), and D (Differential time) (J03, J04, J05).

J62	PID control (PID control block selection)

It is possible to select whether to add dancer control PID regulator output to the main settings, or subtract it from the main settings. It is also possible to select whether to compensate the main settings with a ratio, or with an absolute value (Hz) for PID regulator output.

J62 data			Block selection	
Decimal	Bit 1	Bit 0	Control amount	Operation for main settings
0	0	0	Ratio control	Adder
1	0	1	Ratio control	Subtracter
2	1	0	Absolute value control	Adder
3	1	1	Absolute value control	Subtracter

Winding/unwinding selection

The frequency compensation direction differs depending on whether winding or unwinding is being performed.
Set J62: bit 0 = 0 for winding, and J62: bit 0 = 1 for unwinding.

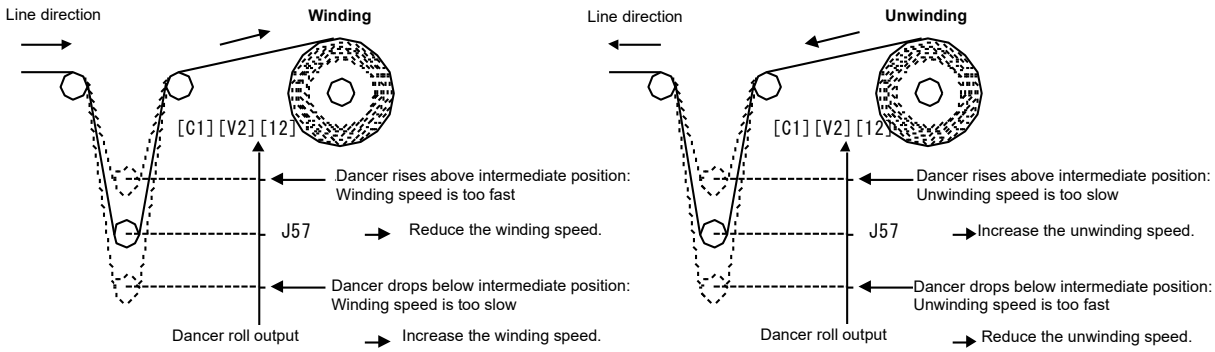

FUNCTION
F Codes
E Codes
C Codes
P Codes
H Codes
A Codes
b Codes
r Codes
J Codes
d Codes
U Codes
y Codes
K Codes

[5] Overload stop function

J63 to J67 **J90 to J92**	**Overload stop function** **(Detection value, Detection level, Operation selection, Operation mode, Timer time)** **Overload stop function** **(Torque limiting P (Gain), Torque limiting I (Integral time), Current limiting level)**

Detects an overload status and if it exceeds the specified detection level (J64) for the specified timer duration (J67), the operation is stopped based on the selected action (J65). It is used to protect the system when an unacceptable overload is applied or to lock the motor shaft by mechanically hitting it to the stopper.

This function is disabled while motor 2 to 4 is selected.

■ Item selection (J63)

Select a target (detected item) to monitor the load status.

J63 data	Detected value	Function overview
0	Torque	To improve the accuracy of calculated torque, perform auto-tuning. Select the driving torque as the target.
1	Current	The no-load current always flows to the motor. Specify J64 (Detection level) correctly considering the no-load current of the applied motor.

■ Detection level (J64)

Set the value for overload detection level in percentage (%) of the motor rated torque or current.
When stopper contact is selected (J65 = 3), detection is performed at motor rated torque of 100%, regardless of the J64 setting.
(See Operation selection J65 = 3 explanatory drawing.)

Note Under sensorless vector control (synchronous motors), the function is disabled at a speed of 10% or less of the base frequency.

■ Mode selection (J65)

Select an operation when the load exceeds the value specified in J64.

J65 data	Enable	Function overview
0	Disable	Overload stop function operation cancel
1	Decelerate to stop	Decelerates to stop the motor, as specified in deceleration time.
2	Coast to stop	Immediately shuts down the inverter, allowing the motor to coast to a stop.
3	Contacting the stopper	The motor decelerates with torque limiting operation, and current control is performed to ensure the holding torque. Current control continues until the run command is turned OFF. Apply the brake before turning OFF the run command. “IOL” and “IOL2” are output during stopper contact control. When stopper contact is selected, perform auto tuning.

Note
- When overload stop function operation begins, that mode is maintained, preventing re-acceleration. To accelerate, turn OFF the run command, and then turn it back ON again.
- Under vector control with speed sensor and sensorless vector control, the J65 = 3 stopper contact function is disabled.
- The motor may overheat if stopped for a long period of time with the stopper contact function.
- If using the stopper contact function for lifting applications, be sure to use in combination with the machine brake.
- Even if J65 is set to 3, if normal torque limiting is enabled first during acceleration, etc., the stopper contact function will be disabled. Set the operation mode (J66) and timer time (J67) to ensure that the stopper contact function is enabled after the normal torque limit operation ends.

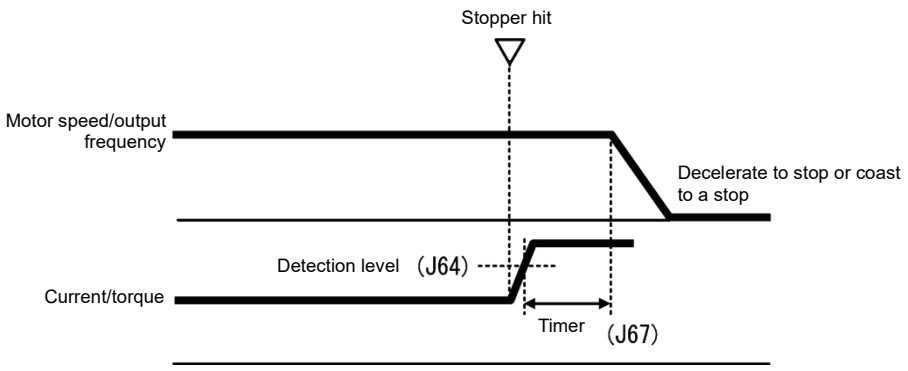

Operation selection J65 = 1, 2

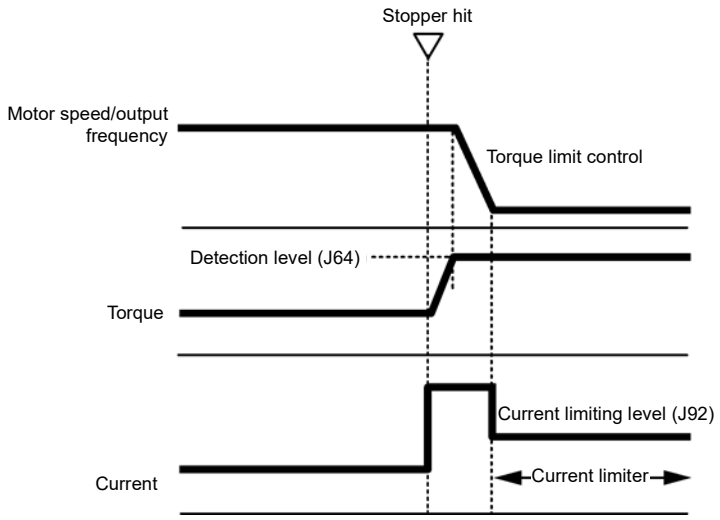

Operation selection J65 = 3

■ Operation Mode (J66)

J66 specifies the inverter's operation condition under which the overload stop function is activated.

Carefully make this setting so as not to activate the overload stop function when it is not necessary.

J66 data	Operation mode
0	Enabled during constant speed and deceleration time.
1	Enabled during constant speed
2	Enabled always

■ Timer (J67)

Apply the timer (J67) to prevent the start of the overload stop function due to the instantaneous, unintended load fluctuation. The overload stop function is activated when the operation condition has continued for specified timer J67 (if J65 = 1, 2).

If J65 = 3, the timer time will be the time until the stopper contact function is enabled after switching to J66 operation mode. Set at such times as when waiting time is necessary until the stopper contact function is enabled after the motor reaches a constant speed.

■ Enable overload stop "OLS" (🕮 Function codes E01 to E09, data = 46)

A digital signal can be used to temporarily enable and disable the overload stop function.

If "OLS" is not assigned to any terminal, the overload stop function is always valid. Overload stop is not performed when OFF. By turning OFF the "OLS" signal when the motor is stopped due to an overload stop to disable overload stop, the motor will restart, and therefore caution is advised.

■ **Torque limiting P (Gain) (J90)**

If the torque limiting operation response is slow when the stopper contact function is selected, increase the gain, and if hunting occurs, decrease the gain.

■ **Torque limiting I (Integral time) (J91)**

If the torque limiting operation response is slow when the stopper contact function is selected, decrease the integral time, and if hunting occurs, increase the integral time.

■ **Current command level (J92)**

Compensates the current command during current control with the stopper contact function. By increasing the setting value, the holding torque increases, but an inverter overload alarm (OLU) or motor overload alarm (OL1) may occur, possibly resulting in mechanical system vibration.

[6] Brake control signal

J68 to J72	**Brake signal (Brake-release current, Brake-release frequency/speed, Brake-release timer, Brake-apply frequency/speed, Brake-apply timer)**
J95, J96	**Brake signal (Brake-release torque, Operation selection)**
H180	**Brake signal (Brake signal operation check time)**
d120 to d125	**For brake signal reverse rotation (Brake-release current, Brake-release frequency/speed, Brake-release timer, Brake-release torque, Brake-apply frequency/speed, Brake-apply timer)**
	Related function codes: A98, b98, r98: Motor 2 to 3 (Function selection)

The brake (release/apply) control signal is useful for lift application such as a hoist. This signal is adjustable with these function codes. It is possible to set the release and apply conditions based of these signals (current, frequency) so that a hoisted load does not fall down at the start or stop of the operation, or so that the load applied to the brake is reduced. The inverter is also equipped with dedicated reverse rotation function codes, allowing individually adjustments to be made with forward rotation or reverse rotation if conditions differ when rising and falling.

■ **Brake signal “BRKS” assignment (Function code E20 to E24, E27, data = 57)**

This signal outputs a brake control command that releases or applies the brake.

Releasing the Brake

When the inverter output current and output frequency exceeds the specified level for the brake control signal (J68/J69/J95) for the period specified by J70 (Brake control signal (Brake-release timer)), the inverter judges that required motor torque is generated and turns the signal BRKS ON for releasing the brake.

This prevents a hoisted load from falling down due to an insufficient torque when the brake is released.

Function code	Name	Data setting range	Remarks
J68	Brake-release current	0.00 to 300.00 %	Set the inverter rated current as 100 %.
J69	Brake-release frequency/speed	0.0 to 25.0 Hz	
J70	Brake-release timer	0.000 to 5.000 s	
J95	Brake-release torque	0.00 to 300.00 %	Set the motor rated torque as 100 %.

Note: Resolution of each function code is different from the FRENIC-MEGA (G1).

■ Brake check signal “BRKE” (Function code E01 to E09, data = 65)

If the status of the brake signal “BRKS” fails to agree with the status of the brake check signal “BRKE” during inverter operation, the inverter enters an alarm stop state with Er6.

This signal is used as a feedback signal for the brake signal BRKS. When the mechanical brake does not operate, it causes the inverter to trip to activate the mechanical brake. The response delay time for BRKS and BRKE can be adjusted with H180: Brake response time.

H180: Brake signal operation check time, setting range: 0.00 s to 10.00 s

Applying the brake

When the run command is OFF and the output frequency drops below the level specified by J71 (Brake control signal (Brake-applied frequency/speed)) and stays below the level for the period specified by J72 (Brake control signal (Brake-applied timer)), the inverter judges that the motor rotation is below a certain level and turns the signal “BRKS” OFF for activating (applying) the brake.

This operation reduces the load applied to the brake, extending lifetime of the brake.

Function code	Name	Data setting range	Remarks
J71	Brake-apply frequency/speed	0.0 to 25.0 Hz	
J72	Brake-apply timer	0.000 to 5.000 s	
J96	Brake signal (mode selection) (Only available when using vector control with speed sensor)	0 to 31 (decimal format) Operation speed (bit 0) 0: Detected speed 1: Reference speed	Specifies the criteria of speed to be used for Brake-apply condition.
		Condition of brake-apply control signal (Bit 4) 0: Regardless of run command status (ON or OFF) 1: Only when run command is OFF	Specifies whether to turn off a brake control signal independent of a run command ON/OFF or only when a run command is OFF. When forward and reverse operations are switched, brake-applied conditions may be met in the vicinity of zero speed. For such a case, select “Only when a run command is OFF” (Bit 4 = 1).

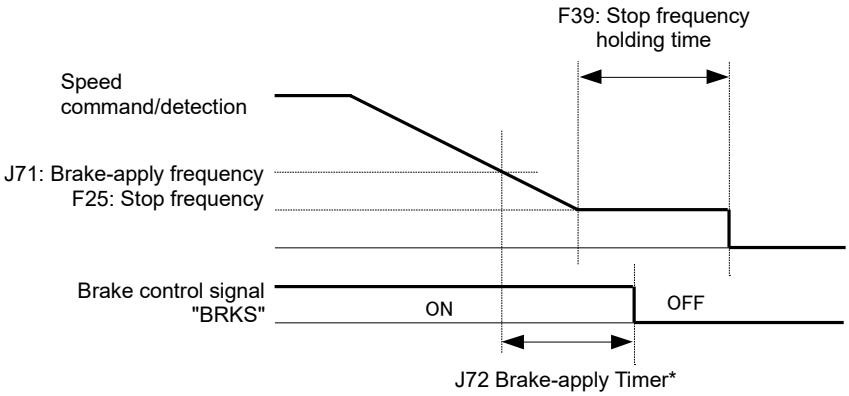

* If inverter output was turned off before the timer counts up, then the brake is applied.

Note

- Brake signals are valid only for motor 1, and when motor 2 to 4 is selected by switching the motor, the brake signal turns ON. However, brake signals are also enabled with A98, b98, or r98.
- When the inverter is shut down due to an alarm status or coast to stop command, the brake control signal is immediately applied.
- The stop is determined after the output frequency exceeds “F25 stop frequency + E30 frequency arrival hysteresis width”, and then the output frequency falls below F25.
  To inch the motor (repeatedly turn ON and OFF the run command in a short time), adjust F25 and E30.

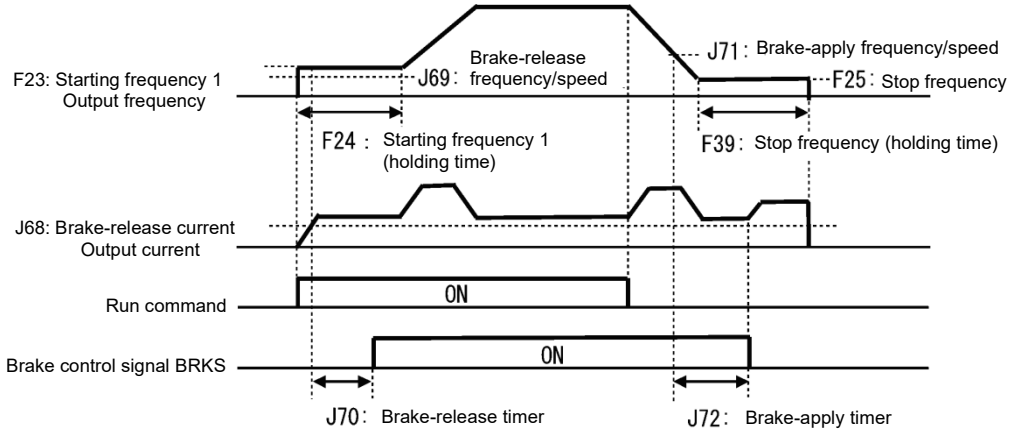

Operation time chart under v/f control

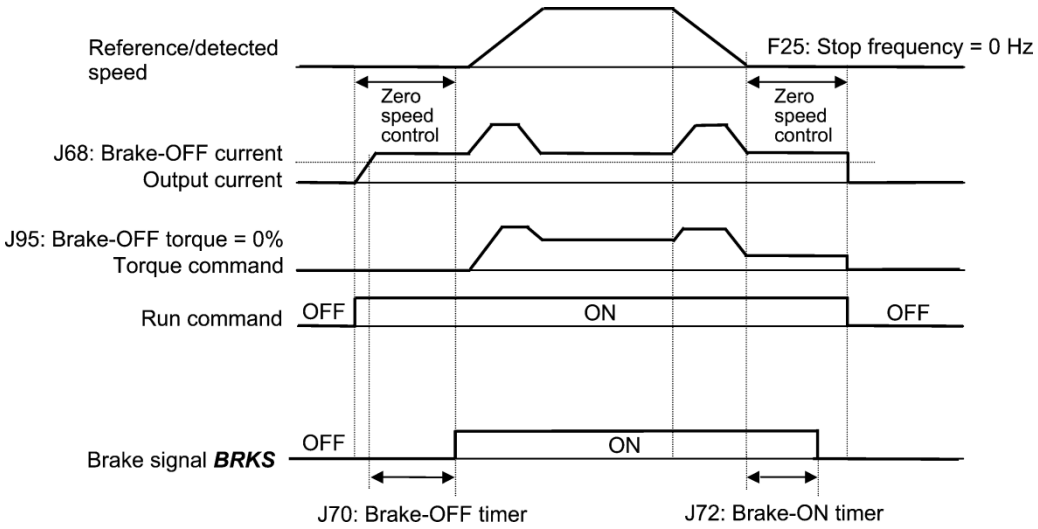

Operation time chart under vector control with speed sensor

Note

- J71 can be used even under vector control with speed sensor.
- If using with zero speed control under vector control with speed sensor, set the J95 brake-release torque to 0%.
- If the brake is released at zero speed, use torque bias.
- If the brake is applied (brake signal OFF) to stop the motor after releasing the brake (brake signal ON) and performing operation, turn the inverter run command OFF and then back ON again in order to release the brake (brake signal ON) to resume operation.
- The brake release signal is not output during auto tuning (stop mode).

■ **Dedicated reverse rotation brake signal function codes**

If necessary to make individual adjustments with forward rotation or reverse rotation, do so with the following dedicated reverse rotation function codes. If data = 999, operation will be performed with the J code function code setting value.

Function code	Name	Data setting range	Remarks
d120	Brake-release current	0.00 to 300.00%, 999: operation based on J68 setting value	100% = inverter rated current
d121	Brake-release frequency/speed	0.0 to 25.0 Hz, 999: operation based on J69 setting value	
d122	Brake-release timer	0.000 to 5.000 s, 999: operation based on J70 setting value	
d123	Brake-release torque	0.00 to 300.00%, 999: operation based on J95 setting value	100% = motor rated torque
d124	Brake-apply frequency/speed	0.0 to 25.0 Hz, 999: operation based on J71 setting value	
d125	Brake-apply timer	0.000 to 5.000 s, 999: operation based on J72 setting value	

FUNCTION
F Codes
E Codes
C Codes
P Codes
H Codes
A Codes
b Codes
r Codes
J Codes
d Codes
U Codes
y Codes
K Codes

J90 to J92	Overload stop function (Torque limiting P (Gain), Torque limiting I (Integral time), Current limiting level)

Refer to the J68 item.

J97 to J99 d27 to d28	Servo lock (Gain, Completion timer, Completion range) Servo lock (Gain switching time, Gain 2)

■ Servo lock

This function holds the motor within the positioning completion range specified by J99 for the period specified by J98 even if an external force applies to the motor. The servo lock function is available only at vector control with speed sensor (F42=6, 16). By assigning servo lock command “LOCK” to the digital input terminal and turning it ON, the servo lock function is enabled.

Note The servo lock operates at low speed, and if used with an external force applied for a long period of time, there is a risk of overheat protection being triggered. Inverter output will be at low frequency when the servo lock is applied, and therefore the servo lock should be used in the current rating 150%/3 s, 80%/continuous range to act as inverter thermal limiting. (The carrier frequency is automatically limited to the upper limit of 5 kHz.)

■ Startup conditions of servo lock

	Servo lock control starts when the following conditions are met:	
	F38 = 0 (Use actual speed as a decision criteria)	F38 = 1 (Use reference speed as a decision criteria)
1	Run command OFF, or Reference frequency < Stop frequency (F25)	
2	“LOCK” (“Servo lock command”) ON (Assignment of “LOCK” (E01 to E05 data = 47))	
3	The actual speed is less than the stop frequency (F25).	The reference speed is less than the stop frequency (F25).

■ Operation examples

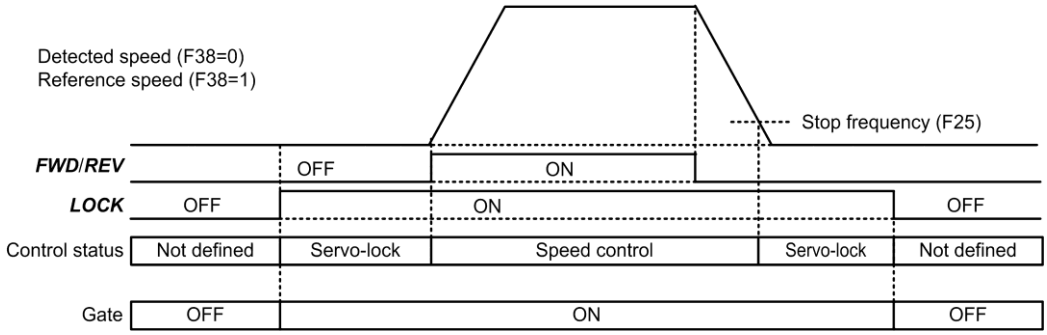

Typical control sequence of servo lock

⚠WARNING

When the servo lock command is ON, the inverter keeps on outputting voltage on output terminals [U], [V] and [W] even if a run command is OFF and the motor seems to be in stop state.

Failure to observe this could result in electric shock.

■ Specifying servo lock control

In-position signal “PSET” assignment (E20 to E24, E27: function code data = 82), servo lock (completion timer) (J98), servo lock (completion range)(J99)

When the servo lock ends, and the motor is held in the range set at servo lock (completion range) (J99) for the length of time set at servo lock (completion timer) (J98), an ON signal is output as the in-position signal.

Data setting range J98: 0.000 to 1.000 (s)

Data setting range J99: 0 to 9999 (pulses)

■ Servo lock (Gain) (J97), (Gain 2) (d28)

J97 specifies the gain of the servo lock positioning to adjust the stop behavior and shaft holding torque against an external force. If the mechanical stiffness is not high, J97 is difficult to set larger. Switching is possible in 2 steps with the digital input servo lock gain selection (SLG2) (E01 to E09 = 110). If the load inertia changes, and control is difficult with one type of servo lock gain, switch to gain 2.

J97, d28	Small ←→ Large
Stop behavior	Response slow, but smooth ↔ Response quick, but hunting might occur.
Shaft holding torque	Small ↔ Large

Data setting range: 0.000 (servo lock disabled), 0.001 to 9.999 (times)

Note: Resolution of J97 and factory default value is different from the FRENIC-MEGA (G1) series.

■ Servo lock gain selection “SLG2” (Function code E01 to E09, data = 110)

Servo lock gain (J97) is selected when OFF, and servo lock gain 2 (d28) is selected when ON.

Switching is possible while the servo lock is applied.

■ Servo lock gain switching time (d27)

If the servo lock gain is switched while the servo lock is applied with the servo lock gain selection “SLG2” signal, vibrations may occur if the change is made in steps, and therefore the servo lock gain should be changed with the servo lock gain switching time (d27) lamp function to suppress vibrations.

Data setting range: 0.000 to 1.000 (s)

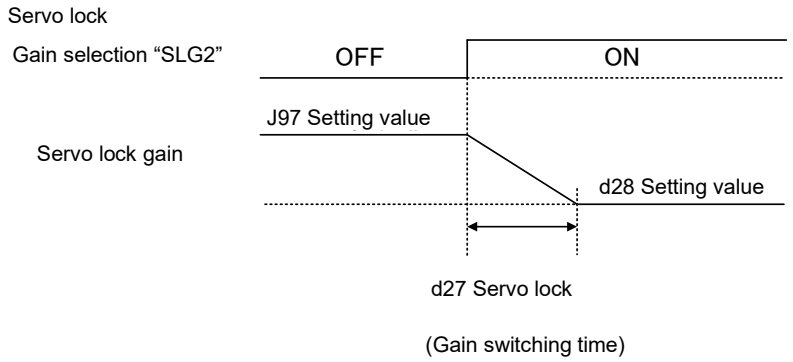

Setting value		SLG2	
J97	d28	OFF	ON
0	0	Servo lock disable (does not start)	
≠ 0	0	Servo lock applied with J97	Servo lock disable (does not start)
0	≠ 0	Servo lock disable (does not start)	Servo lock applied with d28
≠ 0	≠ 0	Servo lock applied with J97	Servo lock applied with d28

FUNCTION
F Codes
E Codes
C Codes
P Codes
H Codes
A Codes
b Codes
r Codes
J Codes
d Codes
U Codes
y Codes
K Codes

■ **Servo lock precautions**

(1) Positioning control error Err

If a positioning error exceeds the value equivalent to four rotations of the motor shaft when the inverter is servo locked, the inverter issues a positioning control error signal Err.

(2) Stop frequency (F25) under servo lock

Since servo lock starts when the output frequency is below the stop frequency (F25), it is necessary to specify such F25 data that does not trigger Err (that is, specify the value equivalent to less than 4 rotations of the motor shaft).

Stop frequency (F25) < (4 x Gain (J97) x Maximum output frequency (F03/A01/b01/r01))

(Example) When Gain (J97) = 0.01 and Maximum output frequency(F03/A01/b01/r01)
= 60 Hz, specify F25 data < 2.4 Hz.

(3) The following functions are ignored in the servo lock mode

- Frequency/speed control specified with the stop frequency
- Rotation direction limitation

5.3.10 J1 codes (Applied functions)

J101, J201	PID control 1, 2 (Mode selection) *101

*101: Supported with ROM0500 or later.

Under PID control, the inverter detects the state of a control target object with a sensor or similar device and compares it with the commanded value (e.g., temperature control command).
If there is any deviation between them, PID control operates so as to minimize it. That is, it is a closed loop feedback system that matches a controlled variable (feedback amount). Use J101/J201 if performing PID control with functionality expanded to process control such as flow rate control and temperature control including flow sensor input and anti jam function.

- If using J101/J201, set J01 to “0” (disable).
  (If J01 ≠ 0, the J01 function is prioritized, and J101/J201 are disabled.)
- By enabling PID1 or 2 control (J101, J201 = 1, 2), the frequency setting block changes to the PID1 or 2 control block.

■ **Mode selection (J101, J201)**

- Data setting range: 0 to 2

J101, J201 data	Function
0	Disable
1	Process control (normal operation: MV increases when SV > PV)
2	Process control (inverse operation: MV increases when SV < PV)

<PID process control block diagram>

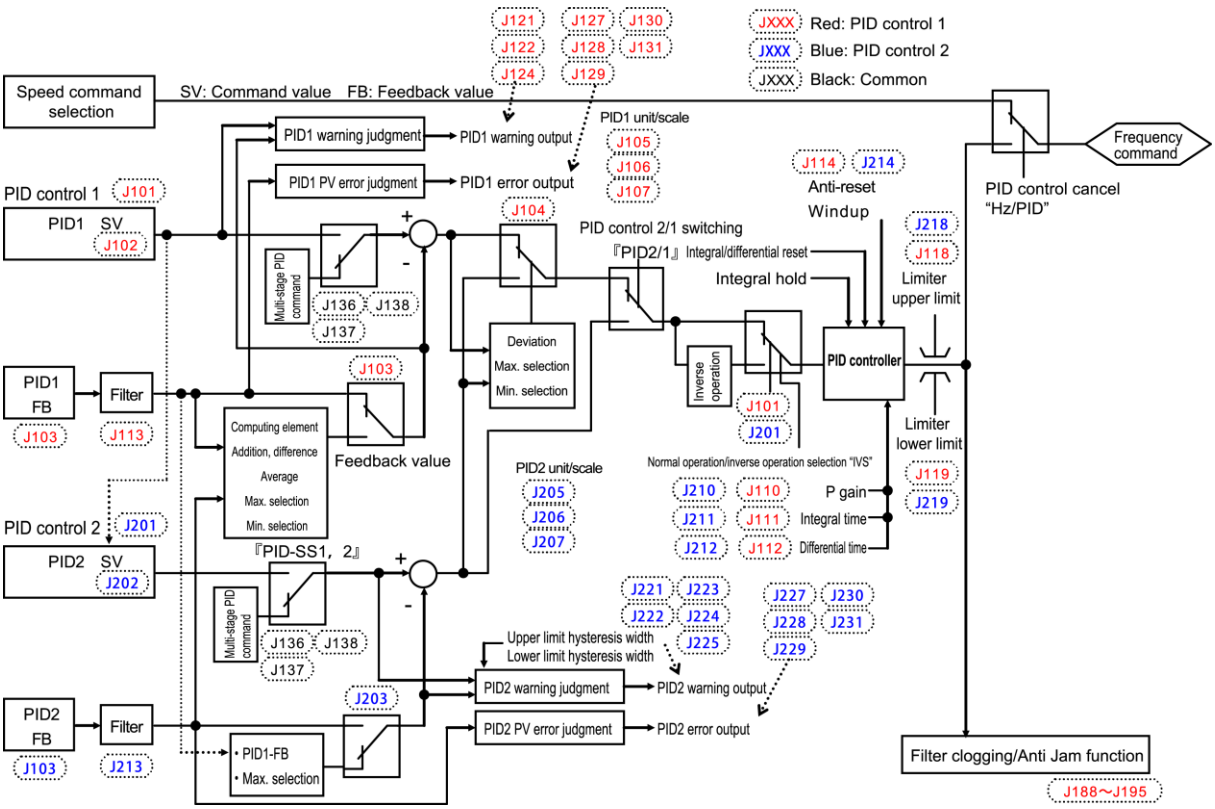

- Normal or inverse operation can be selected for the PID process control output. This allows users to increase or decrease the motor speed based on the deviation (difference between command value and

FUNCTION
F Codes
E Codes
C Codes
P Codes
H Codes
A Codes
b Codes
r Codes
J Codes
d Codes
U Codes
y Codes
K Codes

feedback value), making it possible to use the inverter for applications such as air conditioning also. It is also possible to switch between normal and inverse operation with an external signal (“IVS”).

Refer to “■ Normal/inverse operation switching “IVS” assignment” (E01 to E09, data = 21) for details on switching between normal and inverse operation.

• PID control switching

In addition to PID control 1, command values and feedback values can be input as PID control 2. It is possible to switch between PID control 1 and PID control 2. Switching is performed with the external “PID channel switching “PID2/1”” signal assigned to the digital input terminal. If J01 ≠ 0, the J01 function is prioritized, and J101/J201 are disabled.

Function code J01 setting value	Input signal “PID2/1”	Selected PID control
≠0	Disable	PID control
=0	OFF	PID control 1
=0	ON	PID control 2

By switching between PID control 1 and PID control 2, the PID control, PID control 1, and PID control 2 function code in **Table 5.3-4** PID control setting item list changes.

J102, J202	**PID control 1,2 (Command selection)** ***101**

*101: Supported with ROM0500 or later.

These function codes select the method used to set the PID control 1 and 2 command values.

• Data setting range: 0 to 4 (J102), 0 to 101 (J202)

Refer to the detailed description of J02 item for details.

PID control 1 and 2 application examples are shown below.

<Application example: Process control> (for air conditioners, fans and pumps)

The operating range for PID process control is internally controlled as 0% through 100%. For the given feedback input, determine the operating range to be controlled by means of gain adjustment.

Example: When the external sensor has an output range of 1 to 5 V:

- As this is voltage input, use terminal [12].
- Set the gain (C32 for analog input adjustment) to 200% in order to make 5 V of the maximum output of the external sensor to be 100% of input scale. For the input specification of terminal [12], 0 to 10 V is equivalent to 0 to 100%. The gain therefore must be set 200% (= 10 V / 5 V *100). Note also that any bias setting does not apply to feedback control.

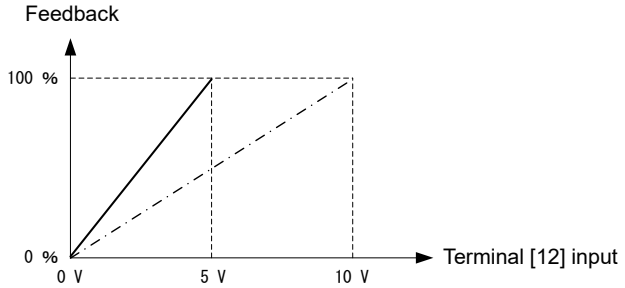

Example 1: When an external sensor has an output range of -7 to +7 VDC:

- As this is voltage input, use terminal [12].
- When the external sensor has ±7 VDC of bipolar output, inside the inverter ±7 VDC should be equivalent to ±100%. To convert ±7 VDC from the output of an external sensor to ±100%, the gain setting (C32) is set in $\frac{10\ V}{7\ V} \fallingdotseq 143$ %.

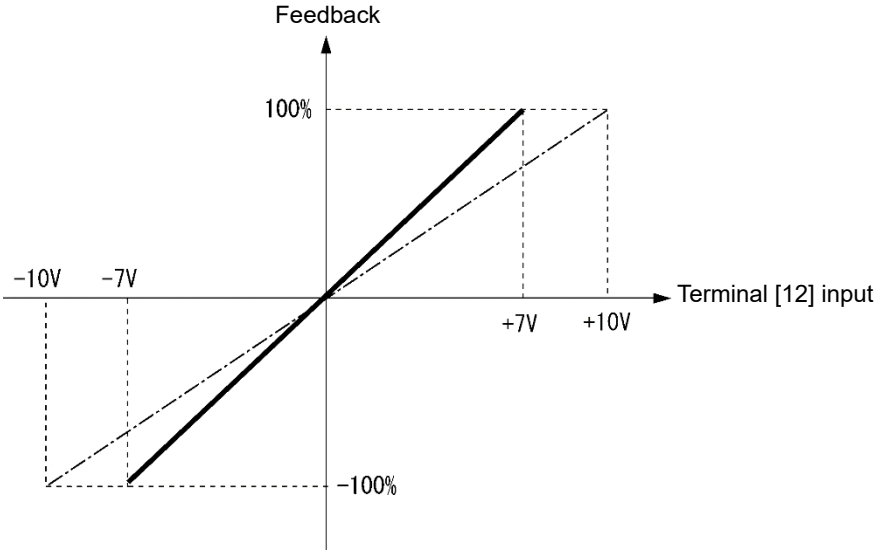

Example 2: When an external sensor has the output range of 0 to 10 VDC:

• As this is voltage input, use terminal [12].

• When the external sensor has unipolar output, inside the inverter it is controlled within the range of 0 to 100%.

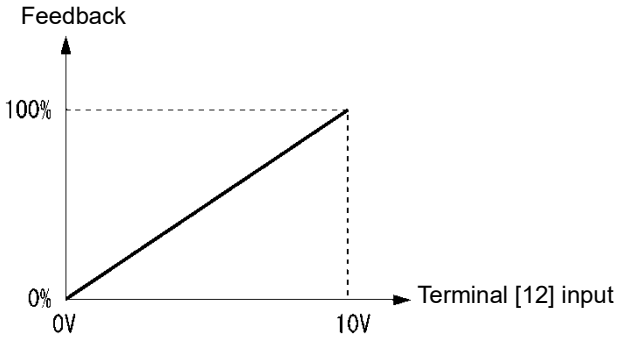

PID display coefficient and monitoring

To monitor the PID command and its feedback value, set the scale to convert the values into easy-to-understand physical quantities such as temperature. The display unit cannot be used on the standard keypad. Use with the multi-function keypad (TP-A2SW).

	Display unit	Maximum scale	Minimum scale
Terminal [12]	C58	C59	C60
Terminal [C1] (C1 function)	C64	C65	C66
Terminal [V2]	C70	C71	C72
Terminal [C1] (V3 function)	C84	C85	C86

Refer to function codes C59, C60, C65, C66, C71, C72, C85, and C86 for details on scales, and to E43 for details on monitoring.

J103, J203	PID control 1,2 (Feedback selection) *101

*101: Supported with ROM0500 or later.

Selects PID control 1 and 2 feedback values.

• Data setting range: 1 to 14

J103 data	J203 data	Function
1	1	PID control 1 feedback value
-	2	PID control 2 feedback value
10	-	Addition (PID control 1 feedback value + PID control 2 feedback value)
11	-	Difference (PID control 1 feedback value - PID control 2 feedback value)
12	-	Average (PID control 1 feedback value, PID control 2 feedback value)
13	13	Maximum (PID control 1 feedback value, PID control 2 feedback value)
14	-	Minimum (PID control 1 feedback value, PID control 2 feedback value)

<PID control 1 feedback selection area block diagram>

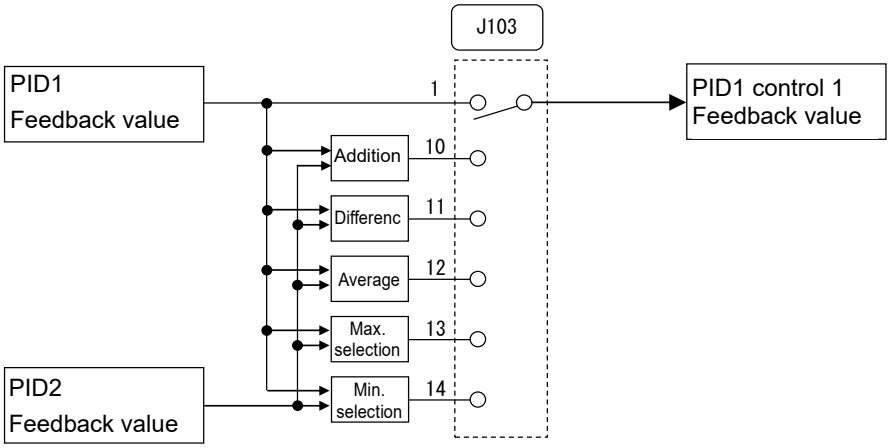

<PID control 2 feedback selection area block diagram>

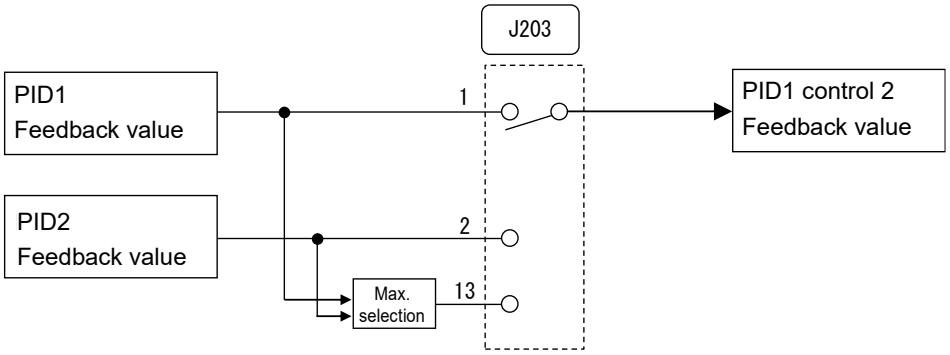

J104	PID control 1 (Deviation selection) *101

*101: Supported with ROM0500 or later.

Selects PID control 1 deviation values.

• Data setting range: 0 to 2

J104 data	Function
0	PID control 1 command value (J102) - PID control 1 feedback value (J103)
1	Maximum selection (The one with the larger deviation, PID control 1 or 2, is used.)
2	Minimum selection (The one with the smaller deviation, PID control 1 or 2, is used.)

<PID control 1 deviation selection area block diagram>

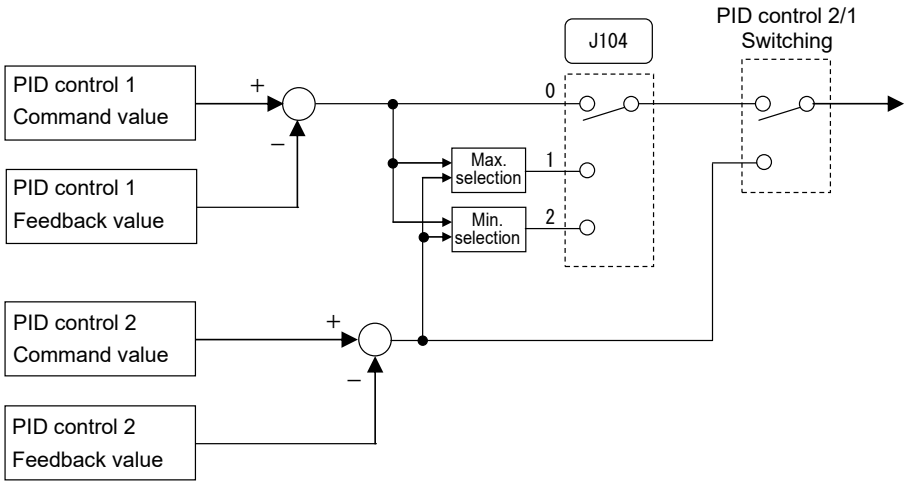

FUNCTION
F Codes
E Codes
C Codes
P Codes
H Codes
A Codes
b Codes
r Codes
J Codes
d Codes
U Codes
y Codes
K Codes

J105, J205	PID control 1,2 (display units)	J205: *101

The unit can be displayed when using the multi-function keypad (TP-A2SW).

Selects the PID control display unit. Function code J105 sets PID control 1, and J205 sets PID control 2. When using PID control, data such as PID command values (SV), feedback values (PV), and control input (MV) can be monitored at the keypad. These function codes are used to set the respective data display units.

If performing PID control with the same unit, and at the same scale as feedback values, there is no need to change the J105 or J205 settings.

Set if wishing to perform PID control for feedback values with another unit or scale.

Use with J105 and J205 set to “0” if using with the unit selected at feedback.

J105, J205	Display unit	J105, J205	Display unit	J105, J205	Display unit
0	* (Factory default)	26	GPS	49	inHg
1	No unit	27	GPM	50 *100	WC
2	%	28	GPH	51	FT WG
4	r/min	29	CFS	52	ATM
7	kW	30	CFM	60	K (temperature)
8	HP	31	CFH	61	°C (temperature)
10	mm/s	32	kg/s	62	°F (temperature)
11	mm/m	33	kg/m	65	N·m
12	mm/h	34	kg/h	66	lb ft
13	m/s	35	lb/s	70	mm
14	m/min	36	lb/m	71	cm
15	m/h	37	lb/h	72	m
16	FPS	38	AF/Y	73	km
17	FPM	40	Pa (pressure)	74	in
18	FPH	41	kPa (pressure)	75	Ft
19 *100	SPM	42	MPa (pressure)	76	Yd
20	m3/s (flow)	43	mbar (pressure)	77	mi
21	m3/min (flow)	44	bar (pressure)	80	ppm (concentration)
22	m3/h (flow)	45	mmHg (pressure)	90	m^3
23	L/s (flow)	46	Psi (pressure)	91	L
24	L/min (flow)	47	mWG (pressure)	92	GAL
25	L/h (flow)	48	inWG (pressure)	93 *100	OZ

* The unit and scale for feedback values are used.

*100: Supported with ROM0300 or later.

*101: Supported with ROM0500 or later.

PID display coefficient and monitoring

To monitor the PID command and its feedback value, set the scale to convert the values into easy-to-understand physical quantities such as temperature. The display unit cannot be used on the standard keypad. Use with the multi-function keypad (TP-A2SW).

	Display unit	Maximum scale	Minimum scale
Terminal [12]	C58	C59	C60
Terminal [C1] (C1 function)	C64	C65	C66
Terminal [V2]	C70	C71	C72
Terminal [C1] (V3 function)	C84	C85	C86

Refer to function codes C59, C60, C65, C66, C71, C72, C85, and C86 for details on scales, and to E43 for details on monitoring.

J106, J206	**PID control 1,2 (Maximum scale)**	**J206: *101**
J107, J207	**(Minimum scale)**	**J207: *101**

*101: Supported with ROM0500 or later.

The PID control values can be converted to a physical quantity that is easy to recognize and displayed accordingly. J106 and J206 set the maximum scale “display at 100% of the PID command value”, and J107 and J207 set the “display at 0% of the PID command value”. The displayed value is determined as follows:

Display value = (PID command value (%)) / 100 * (Max. scale - Min. scale) + Min. scale

- Data setting range: (Max. scale and min. scale) -999.00 to 0.00 to 9990.00

If valid PID feedback signals (E61 to E63, E66 = 5) are assigned to the analog input terminal, and J105 = 0 (factory default), the scale (C59, C60, C65, C66, C71, C72, C85, or C86) for the analog input terminal is applied for the scale.

FUNCTION
F Codes
E Codes
C Codes
P Codes
H Codes
A Codes
b Codes
r Codes
J Codes
d Codes
U Codes
y Codes
K Codes

J108, J208 **J109, J209**	**PID control 1, 2 (Tuning)** **(Tuning operation amount)**	**J208: *101** **J209: *101**
	Related function codes:	**J03 PID control P (Gain))** **J04 PID control (I (Integral time))** **J05 PID control (D (Differential time))**
	PID control 1:	**J110 P (Gain))** **J111 (I (Integral time))** **J112 (D (Differential time))**
	PID control 2:	**J210 P (Gain))** **J211 (I (Integral time))** **J212 (D (Differential time))**

*101: Supported with ROM0500 or later.

MV is forcibly changed under the actual load, speed step changes are repeated several times, the feedback signal change status is observed, each of the P, I, and D constants of PID control are estimated, and then they are automatically written to each function code.

Short-time response tuning and long-time response tuning can be used based on the feedback signal time constant. Furthermore, the step change amount can be set as the tuning operation amount.

If a tuning error occurs, the user will be notified with an error code. Take appropriate measures based on the content of the error code.

Refer to the explanation on each function code for details on each of the P, I, and D constants.

PID control then continues when tuning is complete.

■ PID control 1, 2 (Tuning) (J108, J208)

J108 is common to PID control and PID control 1.

J108 data J208 data	Function
0	No tuning
1	Time constant for short-time response: approx. 30 s or less (required time: approx. 10 s to 8 min)
2	Time constant for long-time response: approx. 30 s or more (required time: approx. 3 min to 90 min)
If tuning ends abnormally, the following value is set for J108, J208.	
100	Tuning cancel: Tuning is canceled when the run command turns OFF, PID control is canceled, forced operation is performed, or an alarm, etc. occurs.
101	Mode unmatch: The time constant is too long or too short. If performed with J108 (J208) set to 1, try again with 2, and if performed with J108 (J208) set to 2, reset to 1 and try again.
102	MV too small: The feedback signal is almost unchanged. Increase operation amount J109 (J209), and perform tuning again.
103	MV too large: The feedback signal change is too large. Decrease operation amount J109 (J209).
104	MV change: Operation limiting such as torque limiting (F40, F41) or current limiting (F43) occurs, the speed changes, and normal tuning is not possible. Disable limiting, decrease the limiting values, or decrease operation amount J109 (J209). This error code may occur even if tuning is canceled.
105	PV too large or too small: Feedback signal PV lies outside the 0 to 100% range, and therefore tuning cannot be performed. Review scaling.
106	PV unstable: Increase feedback filters such as J113 (J213), C33, or C38 so that the PV value stabilizes.
107	Other: Cases where tuning is not possible due to such reasons as no terminal with PV assigned, turning started during operation at the upper limit frequency

■ PID control 1, 2 (Tuning operation amount) J109 (J209)

Sets the amount of speed change when performing tuning. Outputs the frequency to which J109 (J209) is added to the frequency currently output the moment J108 (J208) is set.

- Data setting range: 10 to 100% (maximum frequency: 100%, initial value: 10%)

📖 J109 is common to PID control and PID control 1.

Preparation for PID tuning

- Perform a test run under speed control to ensure that there is nothing to hinder operation with the actual load.
- Specify feedback signal related signals, and ensure that it is possible to monitor the signal level at the inverter.
- Specify PID control related settings, and ensure that PID control can be performed.
- The speed is changed in steps when tuning, and therefore the tuning operation amount should be studied, and the result set in J109 (J209) so that the feedback signal (PV) does not drop to 0% or lower, or 100% or higher.
- Ascertain the approximate time constant for the feedback signal beforehand by changing the speed control speed, and decide whether to perform short-time response tuning or long-time response tuning.

PID tuning procedure

(1) Turn ON the run command to run the inverter.

(2) PID control is performed, and the feedback signal (PV) stabilizes.

(3) Set J108 (J208) to 1 (short-time response) or 2 (long-time response).

(4) Return the keypad display to the operation monitor. "Pid-t" is displayed on the keypad while tuning is being performed. The display returns to the specified monitor when tuning is complete.

(5) The J108 (J208) setting value returns to 0 when tuning is successfully completed. If an error occurs, "Abort" is displayed on the keypad, and the error code is stored in J108 (J208). Take measures to eliminate the cause, and perform tuning again.

PID tuning precautions

- Tuning involves changing in steps by running the motor with an actual load, and therefore steps should be taken to ensure that the run command is turned OFF immediately, or the motor immediately coasts to a stop in preparation for unforeseen circumstances.
- If performing tuning with J108 (J208) = 2 (long-time response), set a large value for feedback filter, and perform tuning with the feedback signal (PV) stable. If PV is unstable, the system may continue to wait for long-time PV to stabilize.

FUNCTION
F Codes
E Codes
C Codes
P Codes
H Codes
A Codes
b Codes
r Codes
J Codes
d Codes
U Codes
y Codes
K Codes

J110, J210	**PID control 1,PID control 2 P (Gain)**	***101**
J111, J211	**I(Integral time)**	***101**
J112, J212	**D(Differential time)**	***101**
J113, J213	**Feedback filter**	***101**

*101: Supported with ROM0500 or later.

These have the same functions as J03: PID control P (Gain), J04: I (Integral time)), J05: D (Differential time), and J06: Feedback filter.
Refer to the detailed description of items J03 to J06.

J114, J214	**PID control 1,2 (Anti-reset wind-up)**	***101**

*101: Supported with ROM0500 or later.

Refer to the detailed description of item J10. Replace the corresponding function codes with those in **Table 5.3-4** PID control setting item list.

J118, J218	**PID control 1,2 (Upper limit of PID process output)**	***101**
J119, J219	**(Lower limit of PID process output)**	***101**

*101: Supported with ROM0500 or later.

Refer to the description of items J18 and J19.

J121, J221	**PID control 1,2 (Alarm output selection)**	***101**
J122, J222	**(Upper level alarm (AH))**	***101**
J124, J224	**(Lower level alarm (AL))**	***101**

*101: Supported with ROM0500 or later.

Refer to the detailed description of items J11 to J13. Replace the corresponding function codes with those in **Table 5.3-4** PID control setting item list.

Digital output signals “PV1-ALM” and “PV2-ALM” can be used for warning outputs.

(E20 to E24, E27 data = 201, 202)

J127, J227	**PID Control 1,2 (Feedback failure detection (Mode selection))**	***101**
J128, J228	**(Feedback failure continuation duration)**	***101**
J129, J229	**(Feedback failure upper-limit)**	***101**
J130, J230	**(Feedback failure lower-limit)**	***101**
J131, J231	**(Feedback failure detection time)**	***101**

*101: Supported with ROM0500 or later.

These functions allow PID control 1 and 2 feedback value (PV value) errors to be detected. An error is detected when the PV signal error level (upper limit J129, J229, lower limit: J130, J230) continues for the set time (J131, J231).

If the mode selection (J127, J227) is 3 to 6, when an error is detected, the motor decelerates and stops after the error duration (J128, J228) has elapsed based on the mode selection. Furthermore, PID control is restored if the PV value returns to within the normal range (upper limit: J129, J229, lower limit: J130, J230) during the error duration.

■ PID control 1, 2 (Feedback failure detection (Mode selection)) (J127, J227)

J127 and J227 select the operation performed after an error is detected.

The physical quantity that can be set is based on the display unit and scale.

• Data setting range: 0 to 6

J127 data	J227 data	J128, J228	Operation details
0	0	Disable	Continue to run with digital output signals “PV1-OFF” and “PV2-OFF” ON
1	1	Disable	Coast-to-stop (PU1, PU2 trip)
2	2	Disable	Deceleration stop (PU1, PU2 trip) * PU1 and PU2 trips are triggered after the motor has decelerated to a stop.
3	3	Enable	Continue to run at maximum output frequency (upper limit frequency)
4	4	Enable	Continue to run at minimum output frequency (lower limit frequency)
5	5	Enable	Continue to run at frequency when error detected
6	-	Enable	Transition to PID control 2 (returns to PID control 1 following error recovery) In this case, control transitions to PID control 2, even if “PID2/1” has not been assigned, or “PID2/1” is OFF. However, if J201 = 0 (disable), the J127 = 1 operation is performed.

📖 PID1 and 2 feedback error digital output signal “PV1-OFF” and “PV2-OFF” can be monitored externally with terminals [Y1] to [Y4], [Y5A/C], or [30A/B/C]. Set function code E20 to E24 or E27 data to “202, 204”.

■ PID control 1, 2 (Feedback failure continuation duration) (J128, J228)

J128 and J228 set he operation duration following error detection with mode selection (J127, J227). The inverter slows the motor to a stop when this time has elapsed. (J127, J227: 3 to 6)

・ Data setting range: 0 to 3600,
999: (Continues mode selection J127 or J227 operation.
PU1, PU2 trip occurs after stopping (output cutoff).)

FUNCTION
F Codes
E Codes
C Codes
P Codes
H Codes
A Codes
b Codes
r Codes
J Codes
d Codes
U Codes
y Codes
K Codes

■ PID control 1, 2 (Feedback failure upper-limit) (J129, J229)

J129 and J229 set the error upper limit value with a physical quantity.

- Data setting range: -999 to 0.00 to 9990, AUTO = 105% or equivalent

■ PID control 1, 2 (Feedback failure lower-limit) (J130, J230)

J130 and J230 set the error lower limit value with a physical quantity.

- Data setting range: In the case of -999 to 0.00 to 9990, AUTO, the upper limit is 105%, and the lower limit is -5%.

■ PID control 1, 2 (Feedback failure detection time) (J131, J231)

J131 and J231 set the error level (upper limit: J129, J229, lower limit: J130, J230) duration. An error is judged after the duration has elapsed.

- Data setting range: 0.0 to 300.0 s

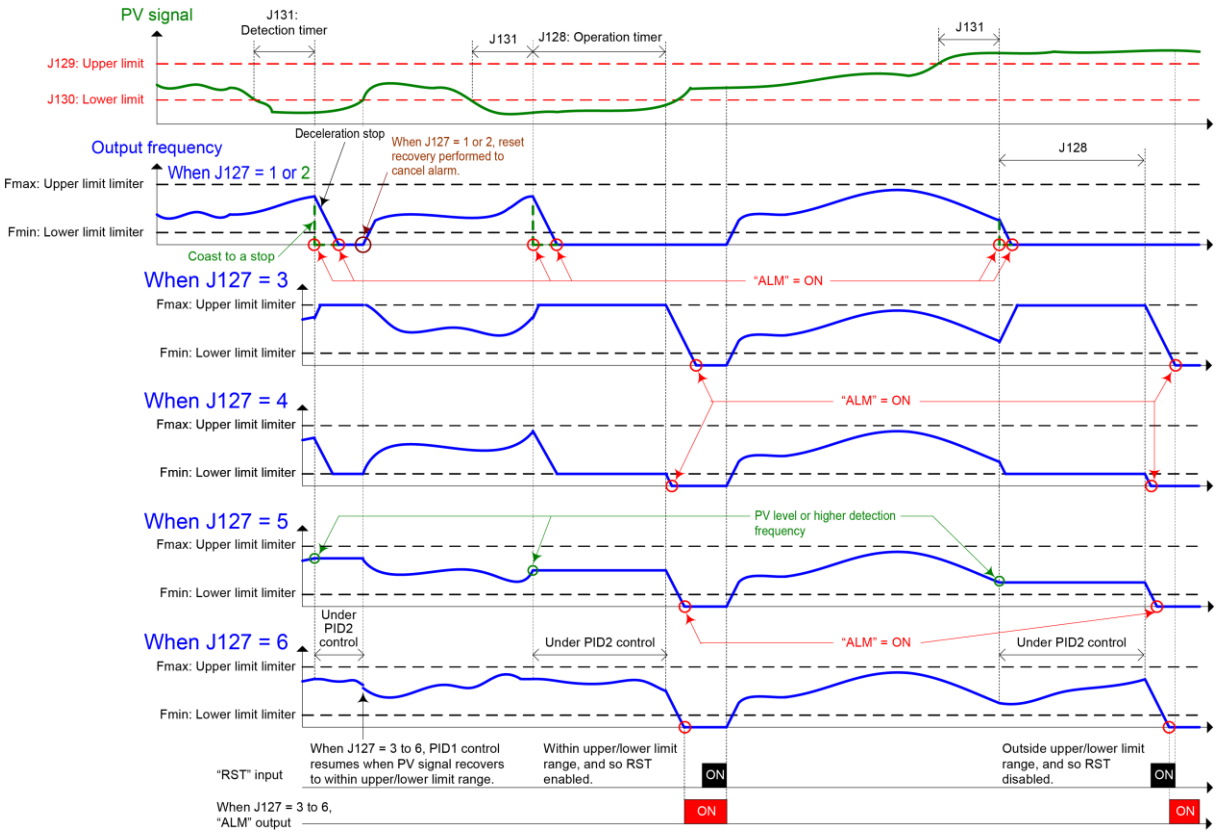

J136 to J138	PID control (multistep command 1 to 3)

PID command values can be given by digital input PID multistep commands. Assign the digital input terminals with "PID-SS1" and "PID-SS2".

PID-SS2	PID-SS1	PID multistep command
OFF	OFF	Not selected
OFF	ON	J136: PID multistep command 1 setting range: -999.0 to -0.00 to -9990.0
ON	OFF	J137: PID multistep command 2 setting range: -999.0 to 0.00 to 9990
ON	ON	J138: PID multistep command 3 setting range: -999.0 to 0.00 to 9990

J143	**Boost Function (Mode selection)**	***101**
J144	**(Operation frequency)**	***101**
J145	**(Acceleration time)**	***101**
J146	**(Operation time)**	***101**
J147, J247	**(Cancel PV level)**	***101**

*101: Supported with ROM0500 or later.

This can be used for pump systems which require pressure to be applied for a fixed time at startup.

Optimum pump startup operation is possible by setting the operating frequency, run time, and acceleration time at startup.

If using the boost function, it is necessary to enable PID control 1 and 2.

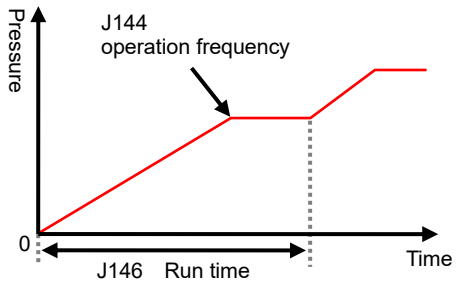

■ Boost function (Mode selection) (J143)

J143 selects the boost function operating conditions. Operating conditions can be selected at such times as when boost command “BST” is “ON”, at startup, and when turning the power ON.

- Data setting range: 0 to 4

J143 data	Operation details
0	Disable (disabled at startup) * Boost function operation when boost command “BST” is ON
1	Enable (enabled at startup + only when performing PID control)
2	Enable (always enabled at startup)
3	Enable (only when starting for first time of turning power ON + only when performing PID control)
4	Enable (only when starting for first time of turning power ON)

Refer to “Function codes E01 to E09 boost function “BST” (data = 13)” for details on the boost command.

FUNCTION
F Codes
E Codes
C Codes
P Codes
H Codes
A Codes
b Codes
r Codes
J Codes
d Codes
U Codes
y Codes
K Codes

■ Boost function (Operation frequency) (J144)

J144 sets the operating frequency when the boost function is ON.

- Data setting range: 0.0 (Inherit): Based on maximum output frequency
  0.1 to 599.0 Hz

■ Boost function (Acceleration time) (J145)

This acceleration time can be set for the boost function only. J145 sets the acceleration time as the time taken to accelerate from 0 to the maximum output frequency. (It is not the time taken to reach J144.)

- Data setting range: 0.00 (Inherit): Based on current valid acceleration time
  0.01 to 6000 s

■ Boost function (Operation time) (J146)

The length of time that the boost function operates can be set.

- Data setting range: 0.0 to 3600.0 s

  If set to “0.0”, the operation ends when the operating frequency (J144) is reached. Furthermore, if the “BST” terminal is turned ON during operation, boost operation continues while the terminal is ON.

  If set to other than “0.0”, boost operation continues for the time set at J146 from the point the operating frequency is reached. If the “BST” terminal is turned ON during operation, boost operation is performed for the time set at J146 from the point the terminal turns ON.

■ Boost function (Cancel PV level) (J147, J247)

J147 and J247 set the PV level (feedback value) to cancel the boost function during boost function operation. The physical quantity that can be set is based on the display unit and scale.

- Data setting range: -999 to 0.00 to 9990, OFF (disable)

* The boost function is canceled when either (1) or (2) below is satisfied.

(1) The set run time (J146) has elapsed.

(2) The cancel PV level (J147, J247) has been reached.

Note

- When the run command is OFF (stopped), the boost function won’t work even if “BST” is ON.
- If an inverter alarm occurs during boost function operation (J143: data 3, 4 selected), boost function operation begins when resuming operation after clearing the alarm. Similarly, if the boost function is interrupted for such reasons as the run command turns OFF, the coast-to-stop command turns ON, or a momentary power failure occurs, boost function operation begins when operation is resumed. (If using the boost function for the purpose of preventing abnormal pressure rises, or if there is a possibility that the inside of the pipes is contaminated with air, operation is resumed with the boost function.)

J146: Example of boost function cancellation based on operation time

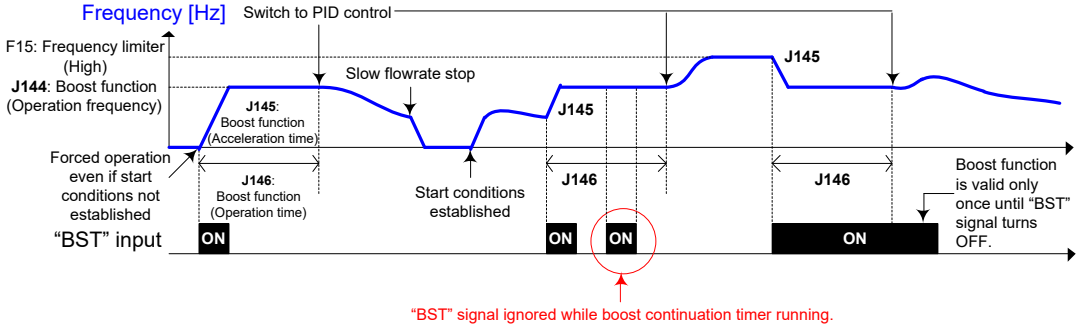

(Example of boost function run time cancellation when J143 is set to "1" (based on "BST" command))

J147: Example of boost function cancellation based on cancel PV level

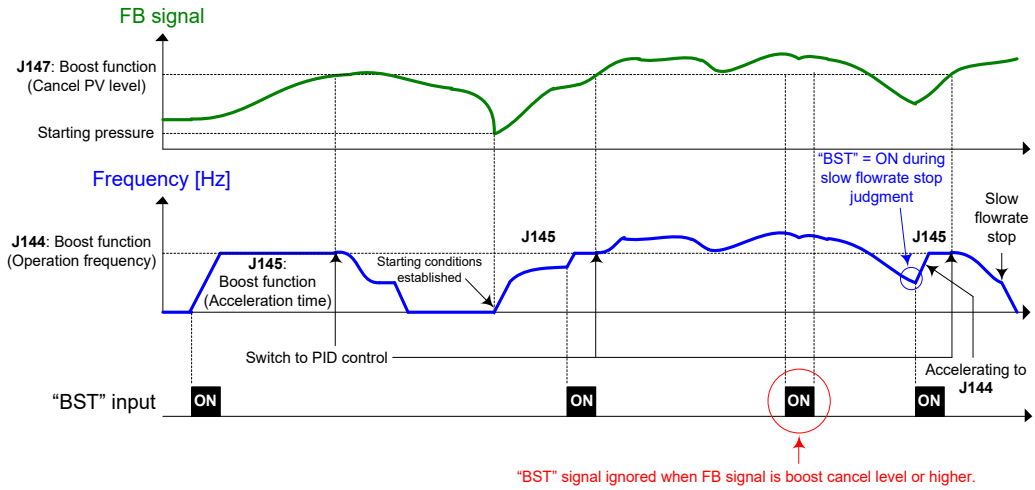

(Example of boost function PV cancellation when J143 is set to "1" (based on "BST" command))

FUNCTION
F Codes
E Codes
C Codes
P Codes
H Codes
A Codes
b Codes
r Codes
J Codes
d Codes
U Codes
y Codes
K Codes

J149, J249	**Slow Flowrate Stop Function 1, 2**	**(Mode selection)**	***101**
J150, J250		**(Operation level)**	***101**
J151, J251		**(Elapsed time)**	***101**
J152, J252		**(Auto-operation frequency lower-limit)**	***101**
J153, J253		**(Pressurization starting frequency)**	***101**
J154, J254		**(Pressurizing time)**	***101**
J156, J256		**(Initiation inhibition time)**	***101**
J157, J257		**(Cancel frequency)**	***101**
J158, J258		**(Cancel deviation level 1)**	***101**
J159, J259		**(Cancel delay timer)**	***101**
J160, J260		**(Cancel deviation level 2)**	***101**

*101: Supported with ROM0500 or later.

The inverter can be stopped if the pump discharge pressure rises, and the amount of water discharged drops. When the slow flowrate stop elapsed time (PID control 1: J151, PID control 2: J251) elapses when the discharge pressure has risen, the PID controller output frequency setting value has dropped, and when at or below the slow flowrate stop operation level (PID control 1: J150, PID control 2: J250), the inverter decelerates and stops, while PID control itself continues to operate. If the discharge pressure drops, the PID controller output frequency setting value rises, the cancellation frequency (PID control 1: J157, PID control 2: J257) or higher is reached, or SV (command value) - PV (feedback value) reaches the cancel deviation level (PID control 1: J158, J160, PID control 2: J258, J260) or higher, and the cancel delay timer (PID control 1: J159, PID control 2: J259) elapses, inverter operation resumes.

Furthermore, by setting the pressurization frequency (J153) and pressurization time (J154), pressurization control is performed after the slow flowrate stop elapsed time (J151) at the slow flowrate stop operation level (J150) or less. Hold is applied to PID control during pressurization. On equipment with bladder tank, by using this function to apply pressure immediately before stopping to raise the pressure, it is possible to increase the stopping time to longer than normal, realizing energy-saving operation.

By being able to adjust the pressurization frequency in the parameters, a pressure level appropriate to the equipment status can be set.

The physical quantity that can be set is based on the display unit and scale.

■ Slow flowrate stop function (Mode selection) (J149, J249)

J149 and J249 select the operation performed for the slow flowrate stop function. Function code J149 sets PID control 1, and J249 sets PID control 2. The PID control control input (MV), or feedback value (PV) can be selected for the item used to judge slow flowrate stop. If slow flowrate stop (Mode selection) (J149, J249) = automatic operation 1 (11, 12), the feedback value (PV) or output frequency when the deviation changes from positive to negative is recorded, and that value becomes the stop condition operation level. Furthermore, if slow flowrate stop (Mode selection) (J149, J249) = automatic operation 2 (21, 22), the feedback value (PV) or output frequency when the flow sensor status changes from ON to OFF is recorded, and that value becomes the stop condition operation level (In this case, it is necessary to specify the flow sensor setting. This is described in detail at the J163 item.) Furthermore, the above automatic operation is valid only in PID control 1, and if PID control 2 is selected at “PID2/1”, stop conditions are judged based on the J249 setting without recording the value.

Note

Even if slow flowrate stop (Mode selection) (J149, J249) is set to automatic operation 2 (21, 22), the setting will be invalid when function code J163 has not been set to “0” (Analog input selection) and E01 to E09 has not been set to “131” (Flow switch).
Furthermore, even if function code J163 is set to “0” (Analog input selection), the setting will also be invalid if the J164 or J165 ON/OFF level is OFF.

- Data setting range: 0 to 22

J149 data	J249 data	Operation details	Stop condition
0	0	Disable	-
1	1	Manual operation (stop judgment: MV)	Control input (MV) ≤ operation level (J150)
2	2	Manual operation (stop judgment: PV)	Feedback value (PV) ≥ operation level (J150)
11	-	Automatic operation 1 (stop judgment: MV) .. Deviation detection method	Control input (MV) ≤ automatically detected output frequency
12	-	Automatic operation 1 (stop judgment: PV) .. Deviation detection method	Feedback value (PV) ≥ automatically detected deviation detection value
21	-	Automatic operation 2 (stop judgment: MV) .. Flow sensor detection method	Control input (MV) ≤ automatically detected output frequency
22	-	Automatic operation 2 (stop judgment: PV) .. Flow sensor detection method	Feedback value (PV) ≥ automatically detected flow detection value

When J149 = 1, 11, or 21 frequency selected

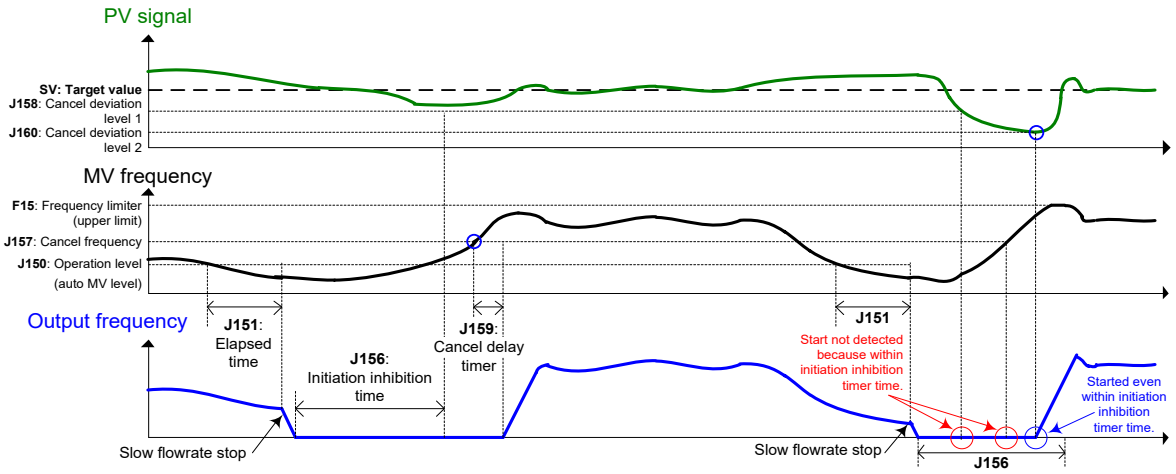

When J149 = 2, 12, or 22 frequency selected

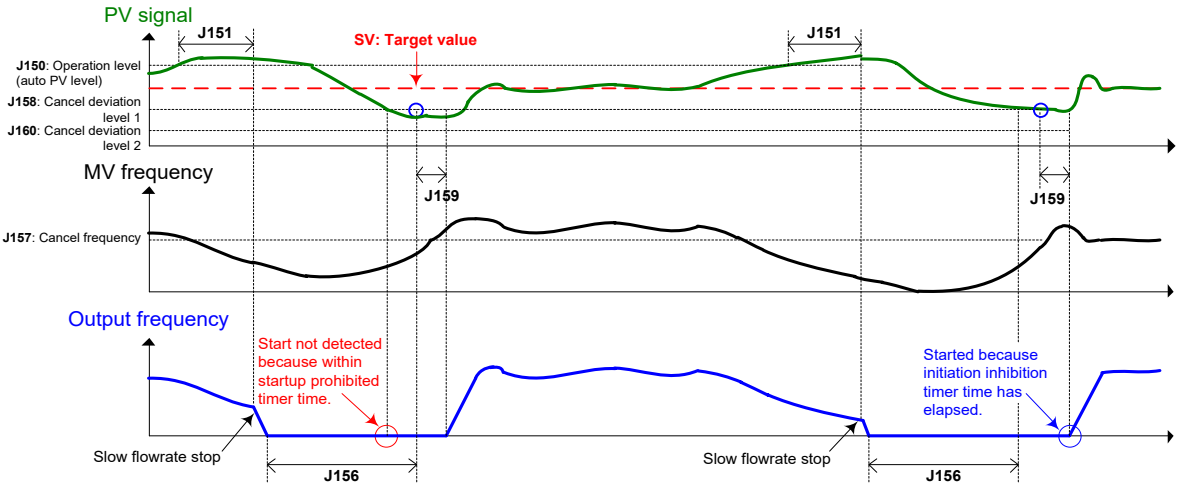

FUNCTION
F Codes
E Codes
C Codes
P Codes
H Codes
A Codes
b Codes
r Codes
J Codes
d Codes
U Codes
y Codes
K Codes

■ Slow flowrate stop function (Operation level) (J150, J250)

J150 and J250 set the operation level as the condition for stopping the slow flowrate stop function. Function code J150 sets PID control 1, and J250 sets PID control 2.

- Data setting range: See below.

J149, J249 data	J150, J250 setting range	Remarks
1, 11, 21	AUTO	Calculates the optimum value automatically from the maximum output frequency (F03).
2, 12, 22		Calculates the optimum value automatically from SV.
1, 11, 21	0.0 to 599.0 Hz	This value is set with the frequency.
2, 12, 22	0.00 to 9990	This value is set with a physical quantity. PID control 1: Display unit (J105), scale (J106, J107) PID control 2: Display unit (J205), scale (J206, J207) (The setting range is limited by the maximum and minimum scale.)

■ Slow flowrate stop function (Elapsed time) (J151, J251)

J151 and J251 set the time until the inverter begins decelerating to a stop after PID output meets the stop conditions based on the values set for the mode selection (J149, J249) and operation level (J150, J250). Function code J151 sets PID control 1, and J251 sets PID control 2.

- Data setting range: 0 to 60 s

■ Slow flowrate stop function (Auto-operation frequency lower-limit) (J152)

J152 sets the lower limit value for the stop judgment level (output frequency) recorded with the termination operation when J149 is set to “11” or “21”.

- Data setting range: 0.0 to 599.0 Hz

■ Slow flowrate stop function (Pressurization starting frequency) (J153)

- Data setting range: 0.0 to 599.0 Hz

■ Slow flowrate stop function (Pressurizing time) (J154)

- Data setting range: 0 to 60 s

By setting the pressurization frequency (J153) and pressurization time (J154), pressurization control is performed after the slow flowrate stop elapsed time (J151). Hold is applied to PID control during pressurization.

On equipment with bladder tank, by using this function to apply pressure immediately before stopping to raise the pressure, it is possible to increase the stopping time to longer than normal, realizing energy-saving operation.

By being able to adjust the pressurization frequency in the parameters, a pressure level appropriate to the equipment status can be set.

Refer to the following diagram for details on settings and operation.

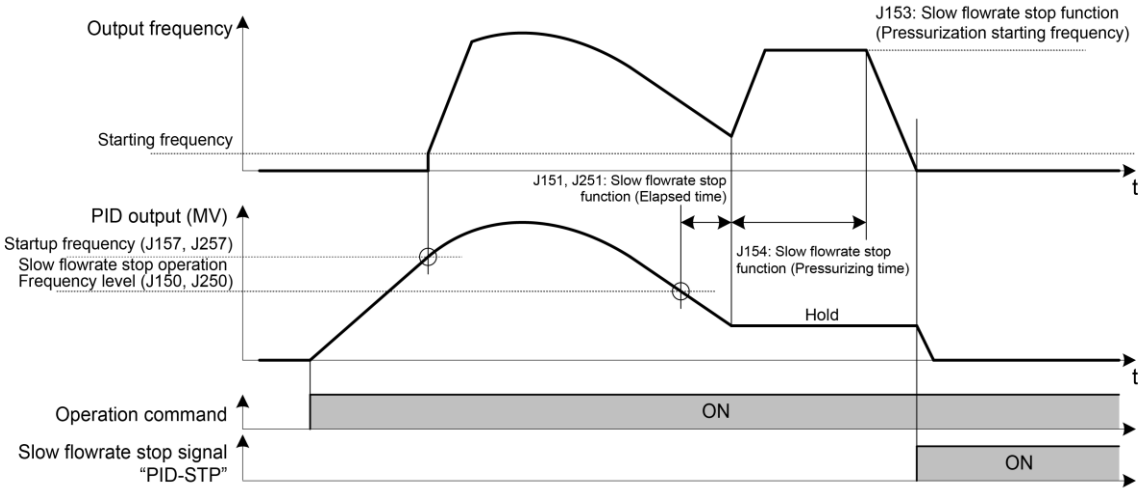

■ Slow flowrate stop function (Initiation inhibition time) (J156, J256)

J156 and J256 set the time that startup is prohibited after slow flowrate stop. Function code J156 sets PID control 1, and J256 sets PID control 2.

- Data setting range: 0 to 3600 s

■ Slow flowrate stop function (Cancel frequency) (J157, J257)

J157 and J257 set the cancel frequency. The conditions for canceling (starting) the slow flowrate stop function are as follows. Function code J157 sets PID control 1, and J257 sets PID control 2.

- Data setting range: 0.0 to 599.0 Hz, OFF

If the initiation inhibition time (J156, J256) has elapsed	If the initiation inhibition time (J156, J256) has not yet elapsed
Canceled (started) when AND conditions (1) and (2) below are met ① Control input (MV) ≥ cancel frequency (J157, J257) ② SV - PV ≥ cancel deviation level 1 (J158, J258)	• Canceled (started) when SV - PV ≥ cancel deviation level 2 (J160, J260)

* MV: Control input SV: Command value PV: Feedback value

<Slow flowrate stop function cancel conditions block diagram>

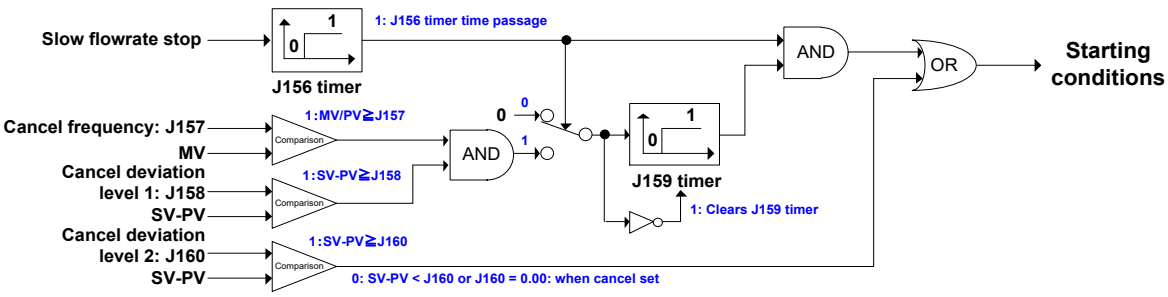

■ Slow flowrate stop function (Cancel deviation level 1) (J158, J258)

J158 and J258 set the cancel deviation level as the cancel condition. Function code J158 sets PID control 1, and J258 sets PID control 2.

- Data setting range: 0.00 (OFF): Disable, 0.01 to 9990

■ Slow flowrate stop function (Cancel delay timer) (J159, J259)

J159 and J259 set the time until the inverter starts up after the slow flowrate stop function cancel conditions (J157, J257) have been met. Function code J159 sets PID control 1, and J259 sets PID control 2.

- Data setting range: 0 to 3600 s

■ Slow flowrate stop function (Cancel deviation level 2) (J160, J260)

J160 and J260 set the cancel deviation level as the cancel (startup) condition for preventing the water supply from being interrupted if necessary to supply water during the time until the initiation inhibition time (J156, J256) has elapsed. Function code J160 sets PID control 1, and J260 sets PID control 2.

Set so that cancel deviation level 1 (J158, J258) < cancel deviation level 2 (J160, J260).

If, on the other hand, cancel deviation level 1 (J158, J258) > cancel deviation level 2 (J160, J260), the cancel condition will be cancel deviation level 2 (J160, J260), even if the initiation inhibition time (J156, J256) has elapsed.

- Data setting range: 0.00 (OFF): Disable, 0.01 to 9990

■ Under sleep mode of PID control “PID-STP” assignment (Function code E20~E24 and E27, data = 44)

Under sleep mode of PID control “PID-STP” is ON when the inverter is in a stopped state due to the sleep function under PID control. PID-STP should be assigned if it is necessary to output a signal to indicate that the inverter is stopped.

J163	**Flowrate Sensor (Input selection)**	***101**
J164	**(ON level)**	***101**
J165	**(OFF level)**	***101**
J166	**(Input filter)**	***101**

*101: Supported with ROM0500 or later.

The flow sensor can be used for judgment for slow flowrate stop, water shortage protection, and large water volume protection. The flow sensor detection results are output as an ON (flowing) or OFF (not flowing) digital signal. The flow sensor is capable of detecting both digital input and analog input. If not set, the flow sensor signal status is treated as OFF.

If specifying digital input for the flow sensor, the digital input “FS” is judged as being from the flow sensor.

If specifying analog input for the flow sensor, the analog value selected with the flow sensor input selection (J163), and the result of the flow sensor ON level (J164) and OFF level (J165) comparison is judged as being from the flow sensor.

■ Flowrate sensor (Input selection) (J163)

- Data setting range: 0 to 25

J163 data	Details	J163 data	Details
0 (Inherit)	Based on the analog input selection (E61,E62,E63)	22	m^3/h
1	PV1 (feedback value)	23	L/s
20	m^3/s	24	L/min
21	m^3/min	25	L/h

* Data of “20” or higher is used for customizable logic connection.

■ Flowrate sensor (ON level) (J164), (OFF level) (J165)

J164 and J165 set the flow sensor ON/OFF level when specifying analog input for the flow sensor. If the analog input value rises above the flow sensor ON level (J164), the flow sensor is recognized as being ON, and if the value drops below the flow sensor OFF level (J165), the flow sensor is recognized as being OFF.

- Data setting range: 0.00 to 9990, OFF (The setting range is limited by the maximum and minimum scale.)

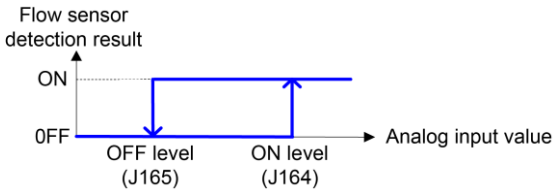

■ Flowrate sensor (Input filter) (J166)

J166 sets the input filter if the flow switch is connected to terminals [X1] to [X9]. This filter does not affect the analog input flow sensor.

📖 Set the flow switch “FS” (data = 131) for function codes E01 to E09.

- Data setting range: 0.00 to 5.00 s

FUNCTION
F Codes
E Codes
C Codes
P Codes
H Codes
A Codes
b Codes
r Codes
J Codes
d Codes
U Codes
y Codes
K Codes

J168 J169	Control of Maximum Starts per Hour (Input selection) *101 (Number of slow flowrate stop detections) *101

*101: Supported with ROM0500 or later.

These function codes are used for detecting frequent start and slow flowrate stoppages due to accumulator tank faults, etc. It is possible to select whether an inverter alarm stoppage occurs, or whether operation continues and a warning is output.

Frequent operation protection is triggered in the case of inverter startup with slow flowrate stop detected equal to or more than the set number of times (J169) in a short period of time.

■ Control of maximum starts per hour (Input selection) (J168)

J168 sets the frequent operation protection operation.

- Data setting range: 0 to 2

J168 data	Operation details
0	Disable
1	Alarm (inverter stoppage following rol trip) * After clearing the alarm, frequent operation detection starts when the first slow flowrate stop occurs.
2	Warning output * After clearing the warning, frequent operation detection starts when the first slow flowrate stop occurs.

📖 If frequent operation protection is output as a light alarm, monitoring is possible with the “L-ALM” output.

■ Control of maximum starts per hour (Number of slow flowrate stop detections) (J169)

J169 sets the number of stoppages as a detection condition.

- Data setting range: 1 to 10 times

The slow flowrate stop detection count (J169) is cleared if even one of the following conditions is satisfied.

- A certain period of time has elapsed
- When the run command is OFF (inverter stopped)
- When PID control is canceled
- When an alarm occurs

J176, J276	**Dry Pump Protection / Dry Pump Protection 2 (J276 to J280 *101)**
J177, J277	**(Input selection)**
J178, J278	**(Detection current)**
J179, J279	**(Deviation)**
J180, J280	**(Flowrate sensor)**
	(Detection timer)

*101: Supported with ROM0500 or later.

Water shortages for water tanks and deep wells, etc. can be detected. Water shortages are detected from the output frequency, output current, flow sensor value, and PID deviation value.

Pressure drops due to water leakages or impeller damage can also be detected. It is possible to select whether an inverter alarm stoppage occurs, or whether operation continues and a warning is output.

Water shortage protection is triggered when all of the detection conditions (1) to (4) below are met, and the conditions continue for the time set for the detection timer (J180, J280). Function codes J176 to J180 set PID control 1, and function codes J276 to J280 set PID control 2.

<Detection conditions>

(1) Output frequency detection
"Output frequency ≥ upper limit limiter"
(F03, F15, J118, J218, E61 to E63 = 13: Lowest frequency at upper limit frequency)
* Pressure drops when a water shortage occurs, and therefore the output frequency runs at the upper limit limiter.

(2) Current detection
"Output current < water shortage protection (detection current) (J177, J277)"
* When a water shortage occurs, the pump load drops due to decreased water supply, and therefore drops in output current are detected.

(3) Deviation detection
"Feedback value (PV) < PID control command value (SV) - deviation (J178, J278)"
* The intake port comes into contact with air when a water shortage occurs, and as a result, the feedback value (PV) drops.

(4) Flow sensor
"Flow sensor = OFF"
* The water supply drops when a water shortage occurs, and therefore the flow sensor is turned OFF.

Note Water shortage protection is judged when conditions (1) to (4) for which OFF is set have already been established.
However, if conditions (2) to (4) are all turned OFF, water shortage protection won't be triggered even if condition (1) is established.

FUNCTION
F Codes
E Codes
C Codes
P Codes
H Codes
A Codes
b Codes
r Codes
J Codes
d Codes
U Codes
y Codes
K Codes

■ Dry pump protection (Input selection) (J176, J276)

J176 and J276 set water shortage protection operation. Function code J176 sets PID control 1, and J276 sets PID control 2.

- Data setting range: 0 to 2

J176, J276 data	Operation details
0	Disable
1	Alarm (inverter stoppage following Pdr trip)
2	Warning output

If water shortage protection is output as a light alarm, monitoring is possible with the “L-ALM” output.

■ Dry pump protection (Detection current) (J177, J277)

J177 and J277 set the detection current values as the detection conditions when a water shortage occurs. Function code J177 sets PID control 1, and J277 sets PID control 2.

(When a water shortage occurs, the water supply drops. As a result, the output current also drops due to the drop in pump load.)

- Data setting range: 0.00 (Disable), 1 to 150% of inverter rated current value set with A unit

■ Dry pump protection (Deviation) (J178, J278)

J178 and J278 set the deviation as the detection condition. Function code J178 sets PID control 1, and J278 sets PID control 2.

(The intake port comes into contact with air when a water shortage occurs, and as a result, the feedback value (PV) drops.)

- Data setting range: 0.00 (OFF): Disable, 0.01 to 9990

(The setting range is limited by the maximum and minimum scale.)

■ Dry pump protection (Flowrate sensor) (J179, J279)

J179 and J279 set whether the flow sensor is used as the detection condition. Function code J179 sets PID control 1, and J279 sets PID control 2. (The water supply drops when a water shortage occurs, and therefore the flow sensor turns OFF.)

- Data setting range: 0: Disable, 1: Enable

Note

Even if the flow sensor (J179, J279) is selected, it will be disabled if function code J163 has not been set to “0” (Analog input selection), and E01 to E09 have not been set to “131”.
Furthermore, even if function code J163 is set to “0” (Analog input selection), automatic operation 2 will also be invalid if the J164 or J165 ON/OFF level is OFF.

■ Dry pump protection (Detection timer) (J180, J280)

J180 and J280 set the output timer as the detection condition. Function code J180 sets PID control 1, and J280 sets PID control 2.

- Data setting range: 0 to 600 s

J182	**End of Curve Protection (Input selection)**	***101**
J183	**(Detection current)**	***101**
J184	**(Deviation)**	***101**
J185	**(Flowrate sensor)**	***101**
J186	**(Detection timer)**	***101**

*101: Supported with ROM0500 or later.

Large water volume operation that occurs due to such reasons as selecting the wrong pump capacity can be detected. Large water volumes are detected from the output frequency, output current, flow sensor value, and PID deviation value.

Large water volume protection is triggered when all of the detection conditions (1) to (4) below are met, and the conditions continue for time set for the detection timer (J186).

<Detection conditions>

(1) Output frequency detection
"Output frequency ≥ upper limit limiter"
(F03, F15, J118, J218, E61 to E63 = 13: Lowest frequency at upper limit frequency)
* The pressure does not reach the set pressure (feedback value drop) when a large volume of water flows, and therefore the output frequency runs at the upper limit frequency.

(2) Current detection
"Output current > large water volume protection (detection current) (J183)"
* Large water volume operation is being performed, and therefore current flows based on the maximum load.

(3) Deviation detection
"Feedback value (PV) < PID control command value (SV) - deviation (J184)"
* More water than the anticipated volume is required when performing large water volume operation, and therefore the feedback value will be insufficient.

(4) Flow sensor
"Flow sensor = ON"
* Large water volume operation is being performed, and therefore the flow sensor turns ON in the same way as it does with normal operation.

Note Large water volume protection is judged when conditions (1) to (4) for which OFF is set are established. However, if conditions (2) to (4) are all turned OFF, large water volume protection won't be triggered even if condition (1) is established.

■ End of curve protection (Input selection) (J182)

J182 sets large water volume protection.

- Data setting range: 0 to 2

J182 data	Operation details
0	Disable
1	Alarm (inverter stoppage following PoL trip)
2	Warning output

If large water volume protection is output as a light alarm, monitoring is possible with the "L-ALM" output.

FUNCTION
F Codes
E Codes
C Codes
P Codes
H Codes
A Codes
b Codes
r Codes
J Codes
d Codes
U Codes
y Codes
K Codes

■ End of curve protection (Detection current) (J183)

J183 sets the detection current value as the detection condition for large water volume.

(Large water volume operation is being performed, and therefore current output flows based on the maximum load.)

- Data setting range: 0.00 (Disable), 1 to 150% of inverter rated current value set with A unit

■ End of curve protection (Deviation) (J184)

J184 sets the deviation as the detection condition.

(More water than the anticipated volume is required when performing large water volume operation, and therefore the feedback value will be insufficient.)

- Data setting range: 0.00 (OFF): Disable, 0.01 to 9990

(The setting range is limited by the maximum and minimum scale.)

■ End of curve protection (Flowrate sensor) (J185)

J179 and J279 set whether a flow sensor is used as a detection condition.

(The flow sensor turns ON when there is a large water volume.)

- Data setting range: 0: Disable, 1: Enable

Note

Even if the flow sensor (J185) is selected, it will be disabled if function code J163 has not been set to “0” (Analog input selection), and E01 to E09 have not been set to “131”.
Furthermore, even if function code J163 is set to “0” (Analog input selection), this function will also be invalid if the J164 or J165 ON/OFF level is OFF.

■ End of curve protection (Detection timer) (J186)

J180 and J280 set the output timer as the detection condition.

- Data setting range: 0 to 600 s

J188	**Filter Clogging Prevention/Anti Jam Function (Input selection)**	***101**
J189	**Filter Clogging Prevention Function (Reverse operation cycle time)**	***101**
J190	**Filter Clogging Prevention Function (Load resistance current)**	***101**
J191	**Filter Clogging Prevention Function (Load resistance PV signal)**	***101**
J192	**Filter Clogging Prevention Function (Load resistance detection timer)**	***101**
J193	**Filter Clogging Prevention/Anti Jam Function (Reverse rotation running frequency)**	***101**
J194	**Filter Clogging Prevention/Anti Jam Function (Reverse rotation running time)**	***101**
J195	**Filter Clogging Prevention/Anti Jam Function (Number of allowable reverse runs)**	***101**

*101: Supported with ROM0500 or later.

<Anti jam function>

In cases where organic matter such as sand becomes trapped in the impeller of submersible pumps, the anti jam function is used to perform reverse the pump rotation to discharge the organic matter, and then restore operation in the forward direction to start normal water supply.

<Filter clogging prevention function>

If the fan filter becomes clogged with dust containing rough particles, the filter clogging prevention function is used to perform reverse the pump rotation to discharge dust to make it finer, and then start air blow by rotating the pump in the forward direction again.

Note The filter clogging prevention function is valid only for PID control 1. If switching from PID control 1 to PID control 2, the filter clogging prevention function counter and time values are cleared.

■ Filter clogging prevention/anti jam function (Input selection) (J188)

- Data setting range: 0 to 3

J188 data	Operation details
0	Disable
1	Enable: Alarm (anti jam protection - inverter stoppage following rlo trip)
2	Enable: Alarm (filter clogging error - inverter stoppage following Fol trip)
3	Enable: A warning (filter clogging error) is output, and operation continues.

<J188= 1 (Alarm: inverter stoppage following anti jam protection rlo trip)>

If overcurrent protection (OC) occurs during forward rotation, the anti jam function is triggered. The number of retries is counted, PID control is canceled after the reset interval (H05) has elapsed, and retry operation is performed for the reverse rotation operation time (J194) at the reverse rotation operation frequency (J193). Operation is then restored to forward rotation (PID control).

Furthermore, if overcurrent protection (OC) occurs during reverse rotation, a retry is attempted with forward rotation (PID control) after the reset interval (H05) has elapsed. When the number of retries has reached the number of allowable reverse runs (J195), an alarm stoppage (rlo trip) occurs if overcurrent protection (OC) occurs again.

After reaching the reverse rotation operation frequency (J193) when performing reverse rotation, the number of retries is cleared when operation continues for the retry count clear time (H104).

Note

- The number of retries is not counted when overcurrent protection (OC) occurs during reverse rotation.
- To use this function, it is necessary to disable the function for preventing overcurrent protection (OC). Consequently, the following settings are required.
  Torque limit value 1 (Drive) (F40) = OFF: Disable
  Current limit (Mode selection) (F43) = 0: Disable
  Torque limit value 2 (Drive) (E16) = OFF: Disable
  Instantaneous overcurrent limit (Mode selection) (H12) = 0: Disable

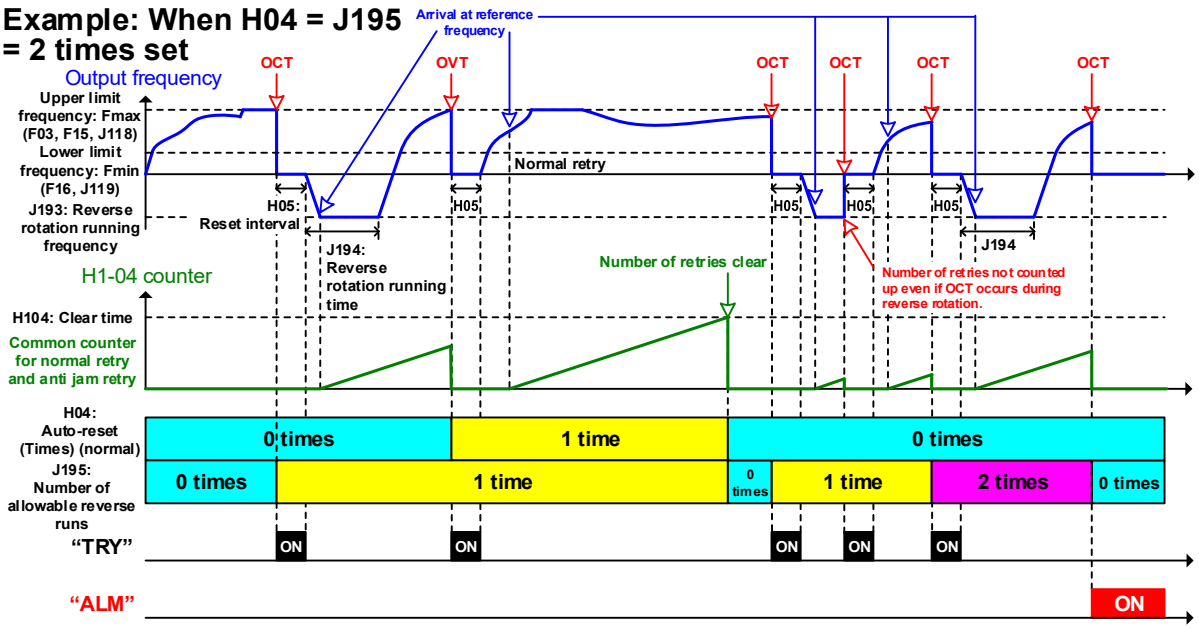

<J188 = 2 (Alarm: inverter stoppage following filter clogging error FOL trip)>

Filter clogging causes the amount of air to decrease after passing through the filter. This in turn leads to a drop in the air cooling fan rotation load, resulting in a drop in the load resistance current value. To the contrary, air flow becomes poorer before the filter, resulting in a little pressurization. This characteristic is detected based on condition (1) or (2) below. The filter clogging function is triggered if either one of these conditions is met, and the load resistance detection timer (J192) continues.

(1) When load resistance current selected
"Output current ≧ load resistance current (J190)"

(2) When load resistance PV signal selected
"Feedback PV value ≥ load resistance PV level (J191)"

When the filter clogging function is triggered, PID control is canceled, and reverse rotation is performed at the reverse rotation operation frequency (J193). (The number of times that filter clogging occurs is counted up.)

When the motor has been running for the reverse rotation time after reverse rotation begins, forward rotation (PID control) is restored. After the number of times that reverse rotation is performed reaches the number of allowable reverse runs (J195), an alarm stoppage (FOL trip) occurs if filter clogging is detected again.

<J188 = 3 (A warning (filter clogging error) is output, and operation continues)>

The detection operation is the same as item (2) above, but after reaching the number of allowable reverse runs (J195), no alarm stoppage occurs if filter clogging is detected again, and instead, a warning is output and operation continues. The operation performed is the filter clogging prevention function, and reverse rotation is continued.

<J188 = 2 (Filter clogging prevention) selection, example of load resistance current level detection operation when J195 = 2 times>

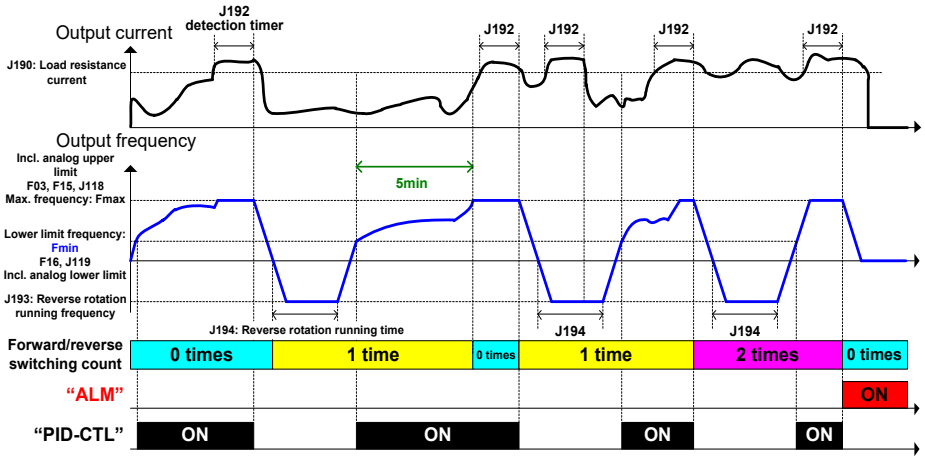

<J188 = 2 (Filter clogging prevention) selection, example of PV signal level detection operation when J195 = 2 times>

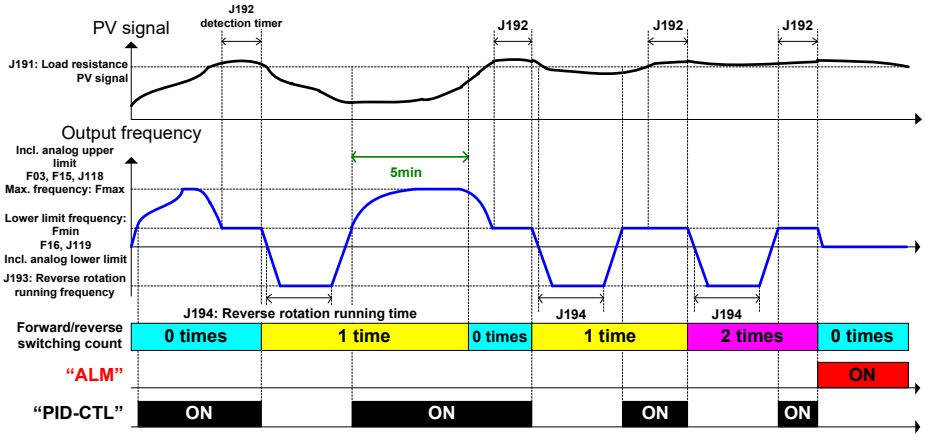

■ Filter clogging prevention function (Reverse operation cycle time) (J189)

PID control is canceled and reverse rotation is performed at the reverse rotation operation frequency (J193) each time the time set at reverse rotation cycle time (J198) is reached. When the motor has been running for the reverse rotation operation time (J194), forward rotation (PID control) is restored. The input selection: J188 = 2, 3 detection processing is canceled while this function is running. Furthermore, if input selection: J188 = 2, 3 runs during reverse rotation, this function is canceled, and the inverter waits until the next cycle time.

- Data setting range: 0 (OFF): disable, 1 to 10000 h

<J188 = 2, 3 (Filter clogging prevention) selection, example of reverse rotation cycle operation when J189 ≠ 0>

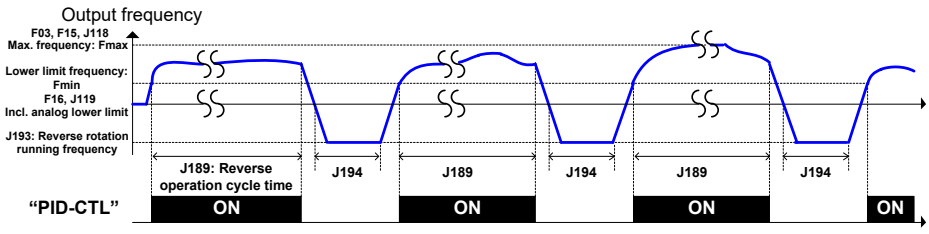

■ Filter clogging prevention function (Load resistance current) (J190)

J190 sets the load resistor current as a detection condition.

- Data setting range: 1 to 150% of inverter rated current value set with A unit

■ Filter clogging prevention function (Load resistance PV signal) (J191)

J191 sets the load resistance PV level as the detection condition with a physical quantity.

- Data setting range: -999 to 0.00 to 9990, OFF

  (The setting range is limited by the maximum and minimum scale.)

■ Filter clogging prevention function (Load resistance detection timer) (J192)

192 sets the duration (load resistance detection timer) as the detection condition.

- Data setting range: 0 to 600 s

■ Filter clogging prevention/ anti jam function (Reverse rotation running frequency) (J193)

J193 sets the output frequency at which reverse rotation is performed.

- Data setting range: 0.0 to 599.0 Hz

■ Filter clogging prevention/ anti jam function (Reverse rotation running time) (J194)

J194 sets the length of time that reverse rotation continue.

- Data setting range: 0 to 600 s

■ Filter clogging prevention/ anti jam function (Number of allowable reverse runs) (J195)

J195 sets the number of times that reverse rotation is permitted. After the permissible number of times is reached, each prevention function is triggered the next time the detection condition is met.

- Data setting range: 1 to 10 times

J198 J199	Wet-bulb Temperature Presumption Control (Frequency reduction rate) *101 (Detection width) *101

*101: Supported with ROM0500 or later.

These function codes are mainly used for cooling tower fan control. On days on which the outside air temperature (humidity) is high in particular, the wet-bulb temperature becomes higher than the set temperature, preventing the water temperature from reaching the set temperature. The fan therefore continues to run at high speed, producing no energy-saving benefit. Using this function, the wet-bulb temperature is estimated automatically, and the fan is controlled so that the cooling water temperature is linked to the outside air (wet-bulb) temperature, thus suppressing unnecessary power consumption.

■ Wet-bulb temperature presumption control (Frequency reduction rate) (J198)

J198 sets the frequency reduction rate each minute when estimating the wet-bulb temperature.

- Data setting range: 0.00 (OFF): Disable, 0.01 to 599.00 Hz/min

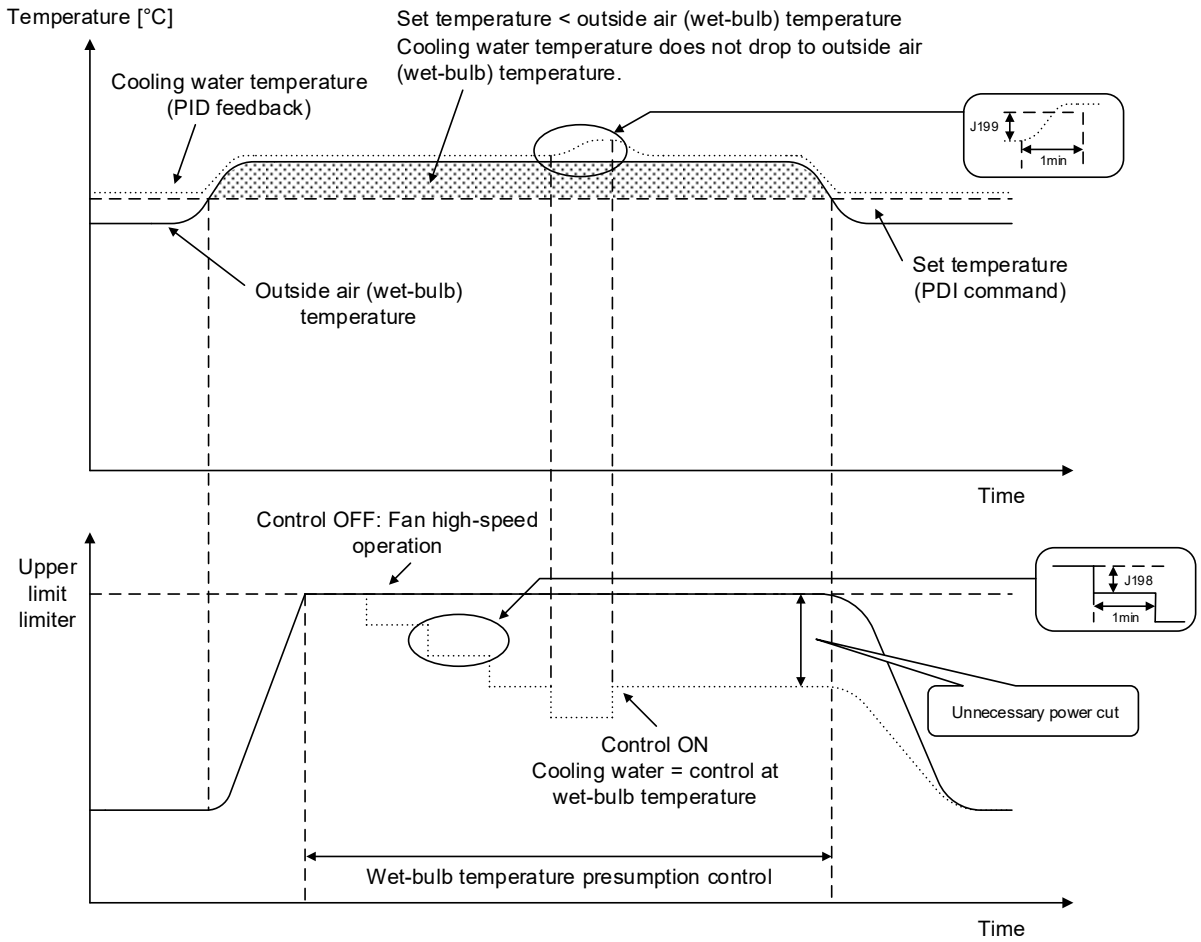

■ Wet-bulb temperature presumption control (Detection width) (J199)

When the output frequency is reduced with wet-bulb temperature estimation control, if the frequency decreases to a fixed frequency, the cooling water temperature rises. J199 sets the detection width for this temperature. When temperature rise is equal to or greater than the detection width, the inverter is run at the frequency prior to reduction, suppressing any surplus power consumption, and keeping the cooling water at a constant temperature.

- Data setting range: 0.00 (OFF): Disable, 0.01 to 9990

FUNCTION
F Codes
E Codes
C Codes
P Codes
H Codes
A Codes
b Codes
r Codes
J Codes
d Codes
U Codes
y Codes
K Codes

5.3.11 J2 codes (Applied functions)

*101: Supported with ROM0500 or later.

J201	**PID Control 2 (Mode selection)**	**(Refer to J101.) *101**

PID control 2 (Mode selection) settings are described in detail at function code J101.

J202	**PID Control 2 (Command selection)**	**(Refer to J102.) *101**

PID control 2 (Command selection) settings are described in detail at function code J102.

J203	**PID Control 2 (Feedback selection)**	**(Refer to J103.) *101**

PID control 2 (Feedback selection) settings are described in detail at function code J103.

J205	**PID Control 2 (Display unit)**	**(Refer to J105.) *101**

PID control 2 (Display unit) settings are described in detail at function code J105.

J206 **J207**	**PID Control 2 (Maximum scale, Minimum scale)**	**(Refer to J106 and J107.) *101**

PID control 2 (Maximum scale, Minimum scale) settings are described in detail at function codes J106 and J107.

J208	**PID Control 2 (Auto tuning)**	**(Refer to J108.) *101**
J209	**(Tuning manipulated value)**	**(Refer to J109.) *101**

PID control 2 (Auto-tuning, Operation frequency when tuning) settings are described in detail at function codes J108 and J109.

J210	**PID Control 2**	**P (gain)**	**(Refer to J110.) *101**
J211		**I (Integral time)**	**(Refer to J111.) *101**
J212		**D (Differential time)**	**(Refer to J112.) *101**
J213		**Feedback filter**	**(Refer to J113.) *101**

PID control 2 (P, I, D, Feedback filter) settings are described in detail at function codes J110 to J113.

J214	**PID Control 2 (Anti-reset wind-up)**	**(Refer to J114.) *101**

PID control 2 (Anti-reset/Windup) settings are described in detail at function code J114.

J218	**PID Control 2 (Upper limit of PID process output)**	**(Refer to J118.) *101**
J219	**(Lower limit of PID process output)**	**(Refer to J119.) *101**

PID control 2 (PID output limiter upper limit, lower limit) settings are described in detail at function codes J118 and J119.

J221	**PID Control 2 (Alarm output selection)**	**(Refer to J121.) *101**
J222	**(Upper level alarm (AH))**	**(Refer to J122.) *101**
J223	**(Upper level alarm detection hysteresis width)**	***101**
J224	**(Lower level alarm (AL))**	**(Refer to J124.) *101**
J225	**(Lower level alarm detection hysteresis width)**	***101**

PID control 2 (Warning output) settings are described in detail at function code J121.

J227	**PID Control 2 (Feedback failure detection (Mode selection))**	**(Refer to J127.) *101**
J228	**(Feedback failure continuation duration)**	**(Refer to J128.) *101**
J229	**(Feedback failure upper-limit)**	**(Refer to J129.) *101**
J230	**(Feedback failure lower-limit)**	**(Refer to J130.) *101**
J231	**(Feedback failure detection time)**	**(Refer to J131.) *101**

PID control 2 (Feedback error detection operation) settings are described in detail at function code J127.

J247	**Boost Function (Cancel PV level)**	**(Refer to J147.) *101**

Boost function (Cancel PV level) settings for PID control 2 are described in detail at function code J147.

J249	**Slow Flowrate Stop Function (Mode selection)**	**(Refer to J149.) *101**
J250	**(Operation level)**	**(Refer to J150.) *101**
J251	**(Elapsed time)**	**(Refer to J151.) *101**
J256	**(Initiation inhibition time)**	**(Refer to J156.) *101**
J257	**(Cancel frequency)**	**(Refer to J157.) *101**
J258	**(Cancel deviation level 1)**	**(Refer to J158.) *101**
J259	**(Cancel delay timer)**	**(Refer to J159.) *101**
J260	**(Cancel deviation level 2)**	**(Refer to J160.) *101**

Slow flowrate stop function settings for PID control 2 are described in detail at function code J149 to J160.

J276	**Dry Pump Protection (Input selection)**	**(Refer to J176.) *101**
J277	**(Detection current)**	**(Refer to J177.) *101**
J278	**(Deviation)**	**(Refer to J178.) *101**
J279	**(Flowrate sensor)**	**(Refer to J179.) *101**
J280	**(Detection timer)**	**(Refer to J180.) *101**

Water shortage protection settings for PID control 2 are described in detail at function code J176 to J180.

FUNCTION
F Codes
E Codes
C Codes
P Codes
H Codes
A Codes
b Codes
r Codes
J Codes
d Codes
U Codes
y Codes
K Codes

5.3.12 J4 codes (Applied functions)

By using FRENIC-MEGA *101 for water supply systems configured with multiple pumps combined using headers, the inverter is able to control multiple pumps, allowing water supply systems to be run with optimum power consumption. Two different methods, cascade operation and rotary operation, are used to control the number of pumps.

Higher economical efficiencies can be demonstrated by understanding the characteristics of each method, and selecting the appropriate method for the system.

Note With PID control (J01), the number of pumps is not controlled.

*101: Supported with ROM0500 or later.

Method	Features
J401 = 1, 11 * Cascade operation (fixed inverter drive system)	Control of up to 10 pumps with single FRENIC-MEGA Number of inverter variable speed drive pumps: 1 (fixed) Number of commercial power-driven pumps: max. 8 (fixed) Number of auxiliary pumps (commercial power-driven): 1 (fixed) 1 magnet connector required for each commercial power-driven pump. Pressure fluctuates significantly when the number of pumps is increased and decreased. J401 = 1: An increase or decrease in the number of pumps is judged based on PID controller output. J401 = 11: An increase or decrease in the number of pumps is judged based on output frequency.
J401 = 2, 12 * Cascade operation (circulation inverter drive system)	Control of up to 5 pumps with single FRENIC-MEGA Number of inverter variable speed drive pumps: 1 (circulation) Number of commercial power-driven pumps: max. 3 (circulation) Number of auxiliary pumps (commercial power-driven): 1 (fixed) 2 + 1 (for auxiliary pump) magnet connectors required for each circulation-driven pump. Pressure fluctuates a little when the number of pumps is increased and decreased. J401 = 2: An increase or decrease in the number of pumps is judged based on PID controller output. J401 = 12: An increase or decrease in the number of pumps is judged based on output frequency.
J401 = 3, 13 * Cascade operation (circulation inverter drive system + other commercial power supply drive)	Control of up to 5 pumps with single FRENIC-MEGA Number of inverter variable speed drive pumps: 1 (circulation) Number of commercial power-driven pumps: max. 3 (circulation) Number of auxiliary pumps (commercial power-driven): 1 (fixed) 2 + 1 (for auxiliary pump) magnet connectors required for each circulation-driven pump. Pressure fluctuates a little when the number of pumps is increased and decreased. Minimal switching between magnet contactor ON/OFF. J401 = 3: An increase or decrease in the number of pumps is judged based on PID controller output. J401 = 13: An increase or decrease in the number of pumps is judged based on output frequency.

Method	Features
J401 = 52 Rotary operation Communications-linked inverter circulation system	Max. number of pumps controlled: 3 Inverter variable speed control for all units (inverter required for number of pumps) All FRENIC-MEGA units linked with RS-485 communication. No magnet connectors required. Order in which pump started and stopped with PID control circulated.
J401 = 54 Rotary operation Communications-linked all pumps simultaneous PID control system	Max. number of pumps controlled: 3 Inverter variable speed control for all units (inverter required for number of pumps) All FRENIC-MEGA units linked with RS-485 communication. All pumps run simultaneously at same speed. Significant energy-saving benefit not with pressure control, but with closed-loop circulating pumps which perform flow management.

Each method is described in detail from the next item onward.

* Judgment on whether to increase or decrease the number of pumps is made based on output frequency, and therefore load fluctuations are small when the number of pumps is increased or decreased, even if the acceleration/deceleration time is long.

FUNCTION
F Codes
E Codes
C Codes
P Codes
H Codes
A Codes
b Codes
r Codes
J Codes
d Codes
U Codes
y Codes
K Codes

J401 = 1, 11: Cascade operation (fixed inverter drive system)

This configuration involves running a specific pump (M0 in diagram below) with the inverter, and running other pumps (M1 to M8) with a commercial power supply where magnetic contactors are turned ON with an output signal such as from terminal [Y]. By running pump M0 with an inverter in PID control, and conditions for increasing the number of pumps are established as the frequency rises due to a drop in the PV signal, a pump start signal is output, the magnetic contactors are turned ON, and the commercial power-driven pumps are started sequentially. When all pumps have started, an additional auxiliary pump (MA in diagram below) can be started. When conditions for decreasing the number of pumps is established as the inverter-driven pump frequency drops due to a rise in the PV signal, the pump start signal is canceled, the magnetic contactors are turned OFF, and the commercial power-driven pumps are stopped sequentially.

Up to 6 start signals (4 transistor outputs, 2 relay outputs) can be output from FRENIC-MEGA with the standard configuration, and therefore this configuration allows 1 inverter variable speed operation pump and 6 commercial-power driven pumps to be run, making a total of up to 7 pumps. To use with the maximum configuration, it is necessary to add a relay output card (OPC-RY2) or digital output card (OPC-DO).

The merits of this method are that many pumps can be controlled, and that only a single magnetic contactor is required for each pump, making it a low-cost solution. The demerit of this method is that the number of pumps is increased or decreased for commercial power-driven pumps, leading to significant pressure fluctuations.

The order in which commercial power-driven pumps start and stop can be changed, averaging out pump operation time.

<Fixed inverter drive system maximum number of connections configuration diagram>

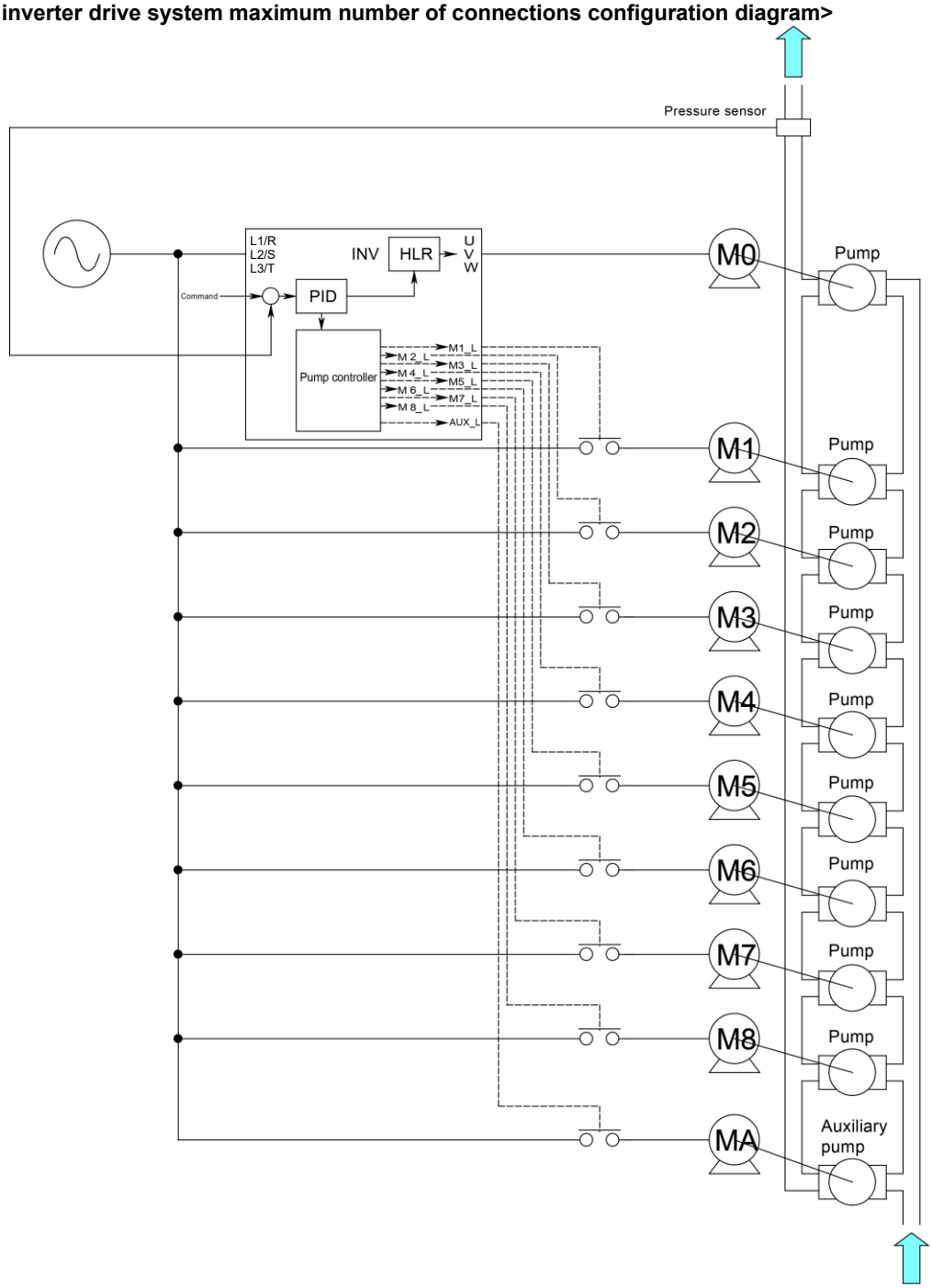

FUNCTION
F Codes
E Codes
C Codes
P Codes
H Codes
A Codes
b Codes
r Codes
J Codes
d Codes
U Codes
y Codes
K Codes

<Fixed inverter drive system operation chart>

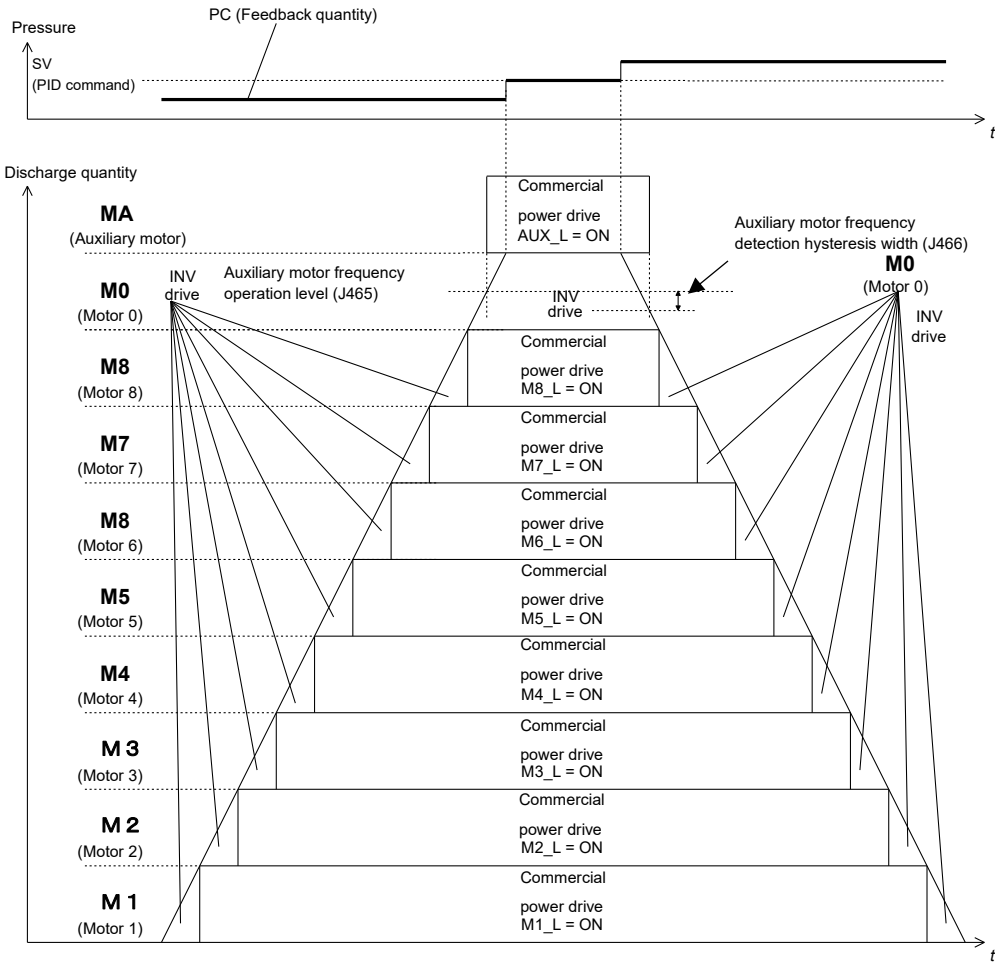

<Fixed inverter drive system (J401 = 1, 11) pump operation timing chart>

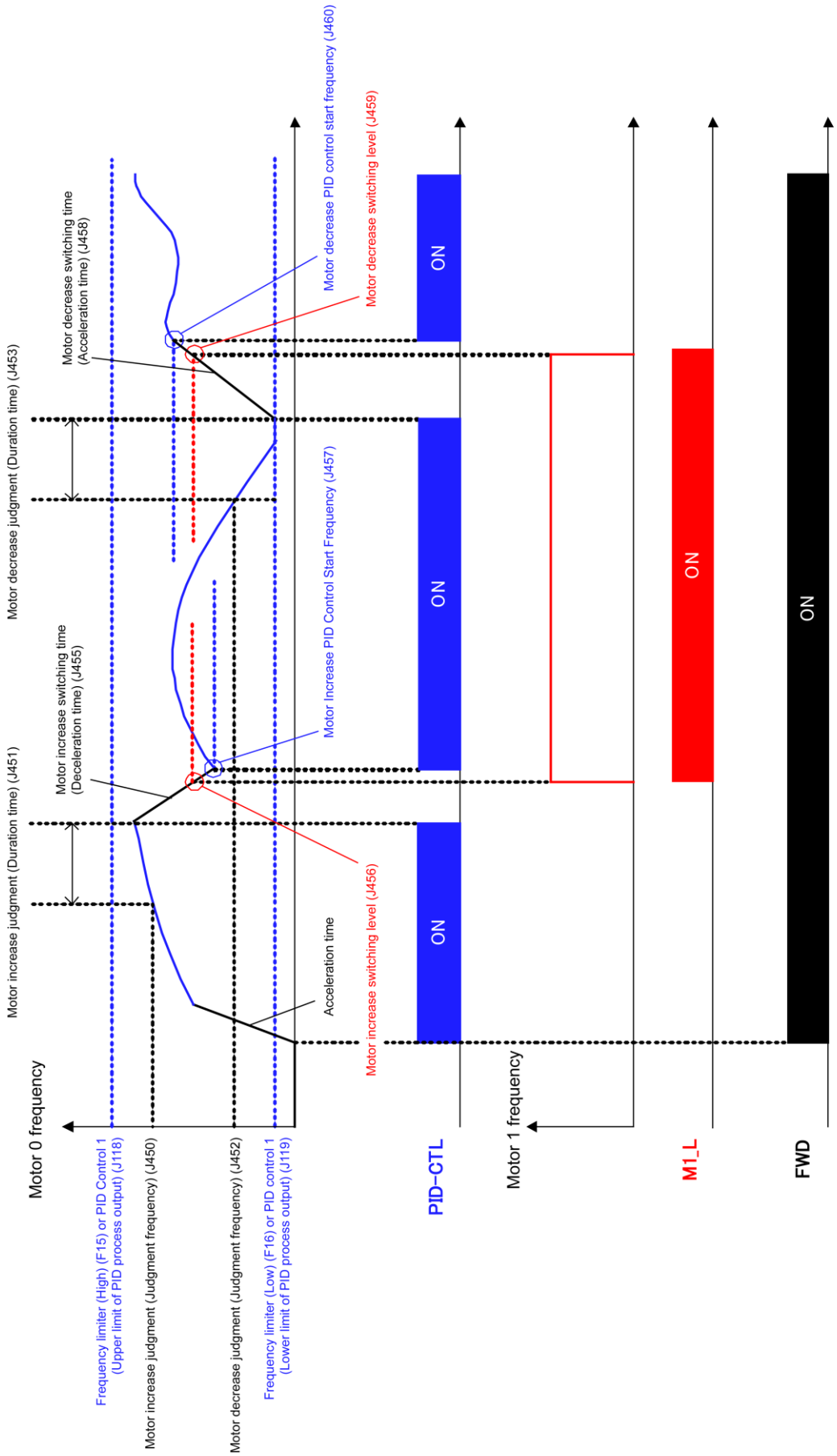

FUNCTION
F Codes
E Codes
C Codes
P Codes
H Codes
A Codes
b Codes
r Codes
J Codes
d Codes
U Codes
y Codes
K Codes

<Function code settings when using fixed inverter drive system>

(1) Function codes that need to be set

By setting the following function codes, cascade fixed inverter drive is performed to control the number of pumps.

No.	Name	Setting	Description
J401	Pump control mode selection	1.11:Fixed inverter drive system	
J101 to J138 J201 to J231	PID1 control PID2 control	Based on each code	Sets PID control based on the system design. It is also possible to switch between PID1 and PID2.
E20 to E24 E27 o01 to o07 o121 to o128	Terminal [Y1 to Y5] Terminal [30A/B/C] Terminal [Y6 to Y12] Terminal [O1 to O8]	88: AUX_L : Auxiliary pump drive signal 161 to 175: M1_L to M8_L : Commercial power drive for motor 1 to 8	Assigns output terminals to commercial power drive start signals based on the number of commercial power-driven pumps. When using the maximum configuration, a relay output card or digital output card is necessary. AUX_L is the auxiliary pump drive signal.
J411 to J418	Motor 1 to motor 8 mode selection	1: Enable	Sets based on the number of commercial power-driven pumps. Only those enabled pumps are subject to control.

(2) Function codes that should be set

No.	Name	Setting	Description
J425	Motor switching procedure	1: Run time uniformity	The order in which commercial power-driven pumps are started and stopped is automatically adjusted so that the run time of each pump is uniform.

(3) Function codes for individual adjustment

Adjust the following as required.

No.	Name	Setting	Description
J450	Motor increase judgment (Judgment frequency)	0 to 599 Hz, 999 (Inherit): Based on J118	Adjusts the conditions for increasing the number of pumps. When inverter-driven pumps exceed J450 and J451 has elapsed, the conditions for increasing the number of commercial power-driven pumps are established. The initial value is established immediately when J118 (PID upper limit limiter) is reached.
J451	Motor increase judgment (Duration time)	0.00 to 6000 s	
J452	Motor decrease judgment (Judgment frequency)	0 to 599 Hz, 999 (Inherit): Based on J119	Adjusts the conditions for decreasing the number of pumps. When inverter-driven pumps drop below J452 and J453 has elapsed, the conditions for decreasing the number of commercial power-driven pumps are established. The initial value is established immediately when J119 (PID lower limit limiter) is reached.
J453	Motor decrease judgment (Duration time)	0.00 to 6000 s	
J461	Motor increase/ decrease switching judgment non-responsive area width	0.0 (OFF), 0.1 to 50.0%	If the SV value and PV value deviation is less than this setting, no judgment is made on increasing or decreasing the number of pumps.

(3) Function codes for individual adjustment (cont.)

No.	Name	Setting	Description
J455	Motor increase switching time (Deceleration time)	0.00 (Inherit): Based on F08 0.01 to 6000 s	Adjusts the sequence when increasing the number of pumps. When the conditions for increasing the number of commercial power-driven pumps are established, the inverter decelerates at J455. When the inverter has decelerated to J456, the commercial power-driven pump start signal is turned ON. Deceleration then continues, and PID control is resumed when J457 is reached. J456 is a comparison of the percentage in the PID control range (lower limit to upper limit). With the initial value, the motor decelerates in the selected deceleration time until the PID lower limit frequency, and the start signal turns ON.
J456	Motor increase switching level	0 to 100%	
J457	Motor increase PID control start frequency	0 to 599 Hz, 999 (Inherit): Based on J452	
J458	Motor decrease switching time (Acceleration time)	0.00 (Inherit): Based on F07 0.01 to 6000 s	Adjusts the sequence when decreasing the number of pumps. When the conditions for decreasing the number of commercial power-driven pumps are established, the inverter accelerates at J458. When the inverter has accelerated to J459, the commercial power-driven pump start signal is turned OFF. Acceleration then continues, and PID control is resumed when J460 is reached. J459 is a comparison of the percentage in the PID control range (lower limit to upper limit). With the initial value, the motor accelerates in the selected acceleration time until the PID upper limit frequency, and the start signal turns ON.
J459	Motor decrease switching level	0 to 100% 999 (Inherit): Based on J459	
J460	Motor decrease PID control start frequency	599 Hz, 999 (Inherit): Based on J450	
J430	Stop of commercial power-driven motors	0: Commercial power drive stop 1: Commercial power drive stop only when inverter alarm occurs 2: Continue to run	Sets whether to stop commercial power-driven pumps by turning OFF the inverter run command, or with an alarm stoppage. With either setting, when coast-to-stop command BX is input to the inverter, all commercial power-driven pumps stop. With the initial value, commercial power-driven pumps are stopped when stop conditions are established.
J436	Motor regular switching time	0.0: Disable 0.1 to 720.0 h 999 (TEST): Fixed at 3 min	When feedback signals continue to be stable, the run time for specific pumps ends up longer, without the number of commercial power-driven pumps being increased or decreased. By setting the time for this code, the time is forcibly increased or decreased if the set time is not increased or decreased.
E01～E09	Terminal [X1 to X9]	151 to 158: MEM 1 to 8 Pump control motor 1 to 8	Each pump can be individually severed from quantity control with an external signal. Only those pumps for which the MEM signal is ON are subject to control.
J465	Auxiliary motor (Frequency operation level)	0.0 (OFF), 0.1 to 99.0 Hz	When all pumps subject to quantity control are running, and inverter output is J465 or higher, the auxiliary pump start signal is turned ON. Once pumps have decelerated from J465 to J466, the auxiliary pump start signal is turned OFF.
J466	Auxiliary motor (Hysteresis width)	0.0 to 599.0 Hz	

Refer to the separate descriptions for details on individual function codes.

FUNCTION
F Codes
E Codes
C Codes
P Codes
H Codes
A Codes
b Codes
r Codes
J Codes
d Codes
U Codes
y Codes
K Codes

J401 = 2, 12: Cascade operation (circulation inverter drive system)

Two magnet contactors are required for each pump to allow the drive system to be switched between inverter drive and commercial power drive for up to four pumps with a single inverter. When starting operation, a single inverter-driven pump is run in variable speed operation with PID control. When the PV signal drops and frequency rises, whereby establishing conditions for increasing the number of pumps, the inverter-driven pump switches to commercial power drive, and the additional pump is started with inverter drive. When further conditions for increasing the number of pumps are established, pumps are started sequentially, and the additional pumps are driven by the inverter. When all pumps have started, an auxiliary pump (MA in diagram below) can be started with commercial power drive. When the PV signal rises and inverter-driven pump frequency drops, whereby establishing conditions for decreasing the number of pumps, the commercial power-driven pump start signals are canceled, and these pumps are stopped sequentially. When decreasing the number of pumps, operation continues for the last pump that was added.

With this system, an inverter drive signal and commercial power drive signal are required for each pump subject to control. With the maximum configuration, an auxiliary pump start signal is also required.

Up to 6 start signals (4 transistor outputs, 2 relay outputs) can be output from FRENIC-MEGA with the standard configuration, and therefore this configuration allows up to 3 pumps to be controlled. To use with the maximum configuration, it is necessary to add a relay output card (OPC-RY, OPC-RY2) or digital output card (OPC-DO).

The merit of this system is that inverter-driven pumps are circulated, balancing out the pump run time.

J401 = 3, 13: Cascade operation (circulation inverter drive system + other commercial power supply drive)

With this system, the basic configuration is the same as that of the circulation inverter drive system, but inverter-driven pumps are fixed in slow flowrate stop units, and the inverter-driven pump is switched the next time operation is started.

The merit of this system is that the number of times that magnet contactors are turned ON and OFF is low. This system is ideal for service water supply systems where slow flowrate stop is performed frequently.

<Circulation inverter drive system maximum number of connections configuration diagram>

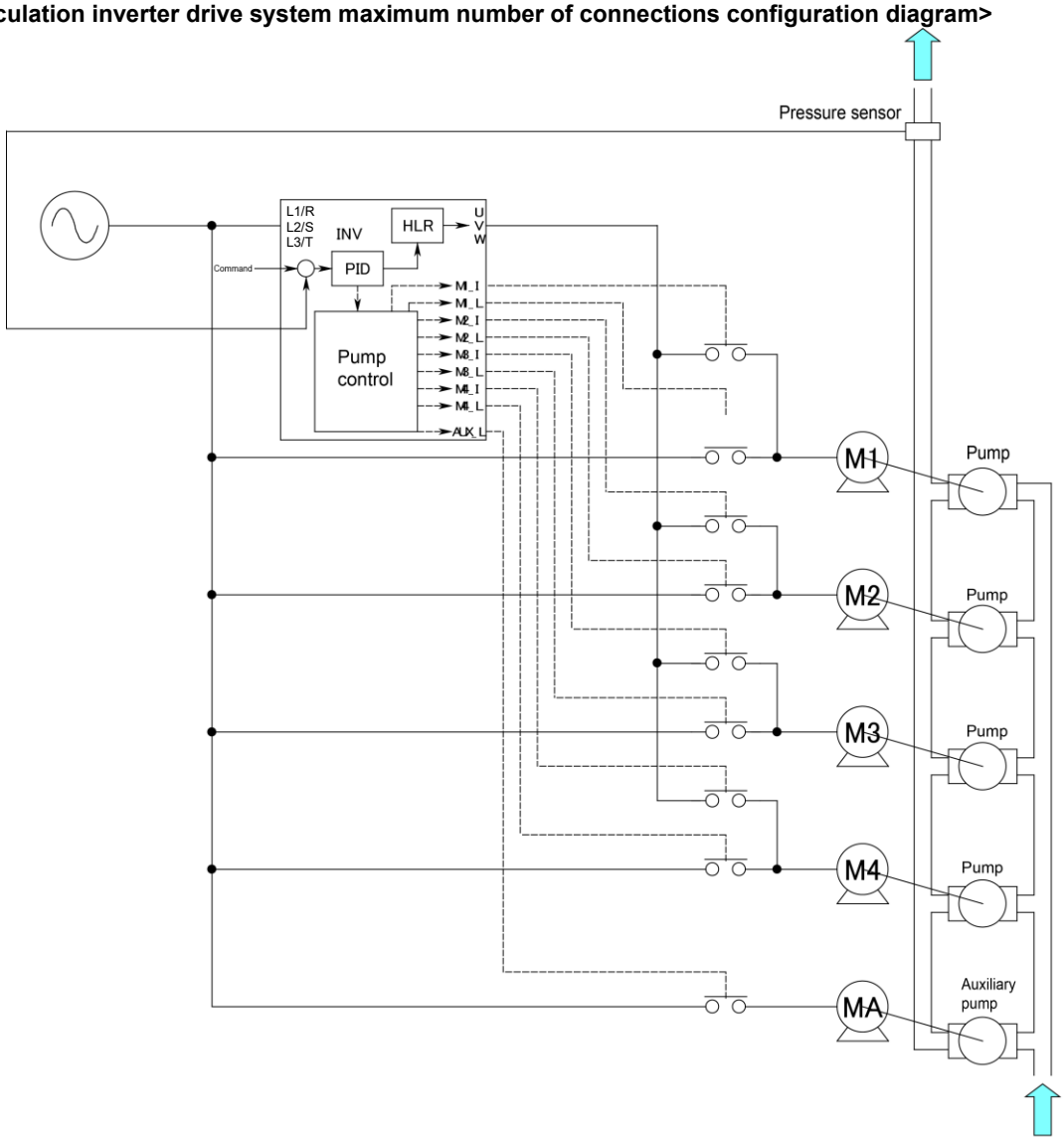

<Circulation inverter drive system (J401 = 2) operation chart>

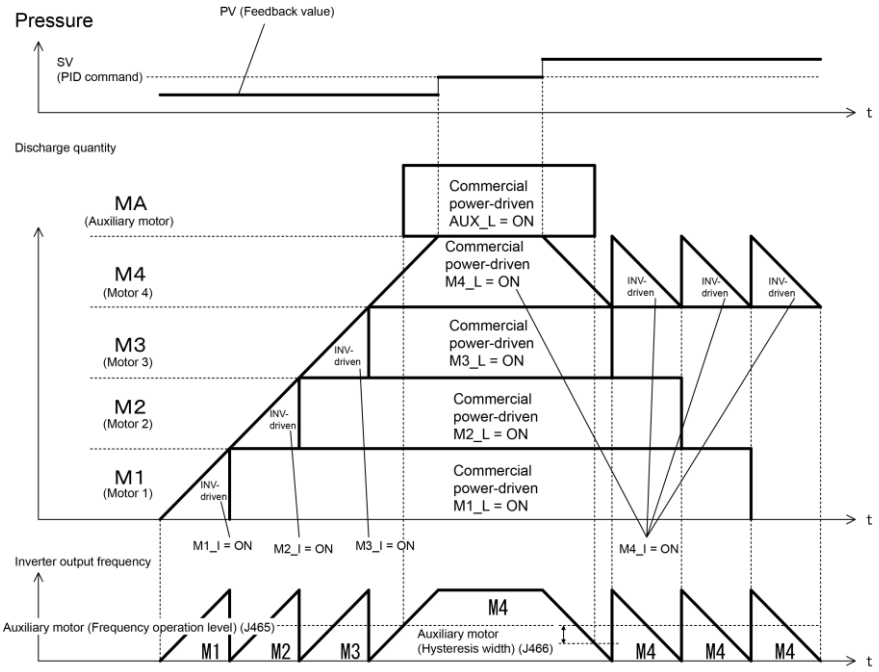

<Circulation inverter drive system + other commercial power supply drive (J401 = 3) operation chart>

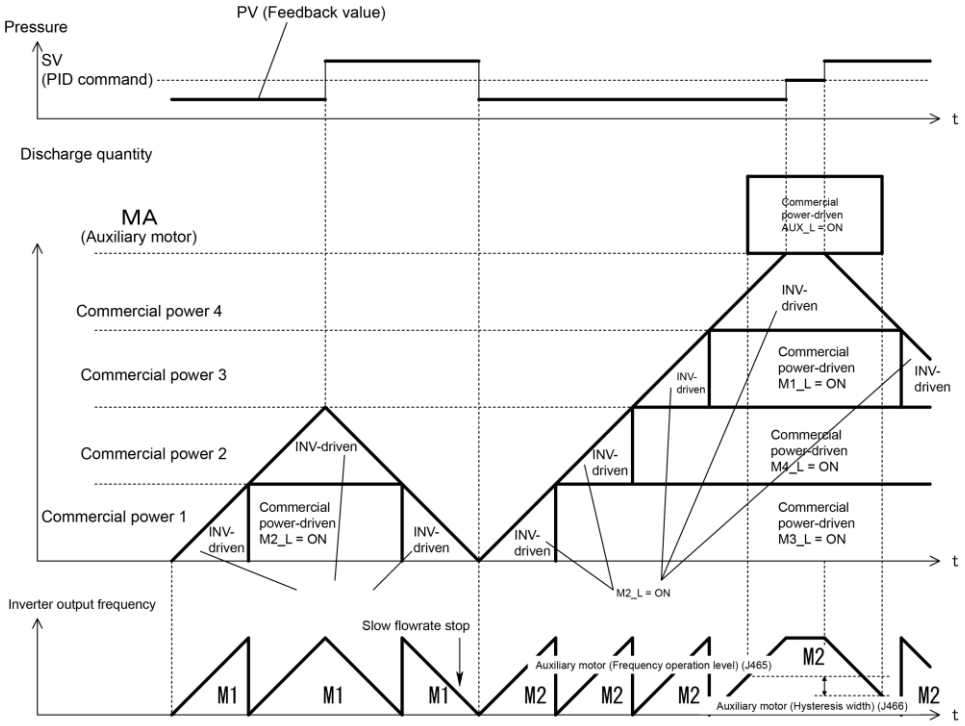

<Circulation inverter drive system (J401 = 2) pump operation timing chart>

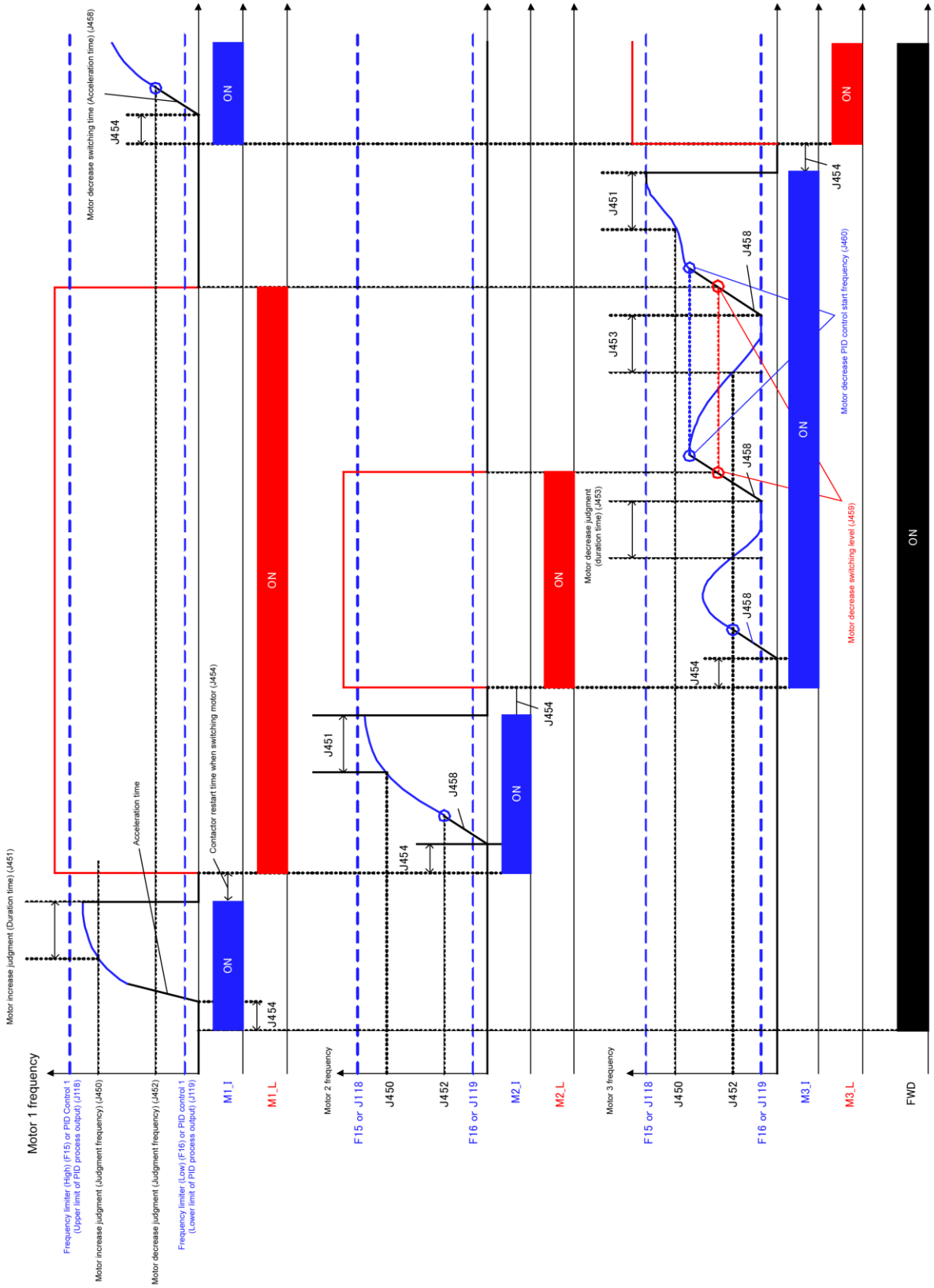

FUNCTION
F Codes
E Codes
C Codes
P Codes
H Codes
A Codes
b Codes
r Codes
J Codes
d Codes
U Codes
y Codes
K Codes

<Circulation inverter drive system + other commercial power supply drive (J401 = 3) pump operation timing chart>

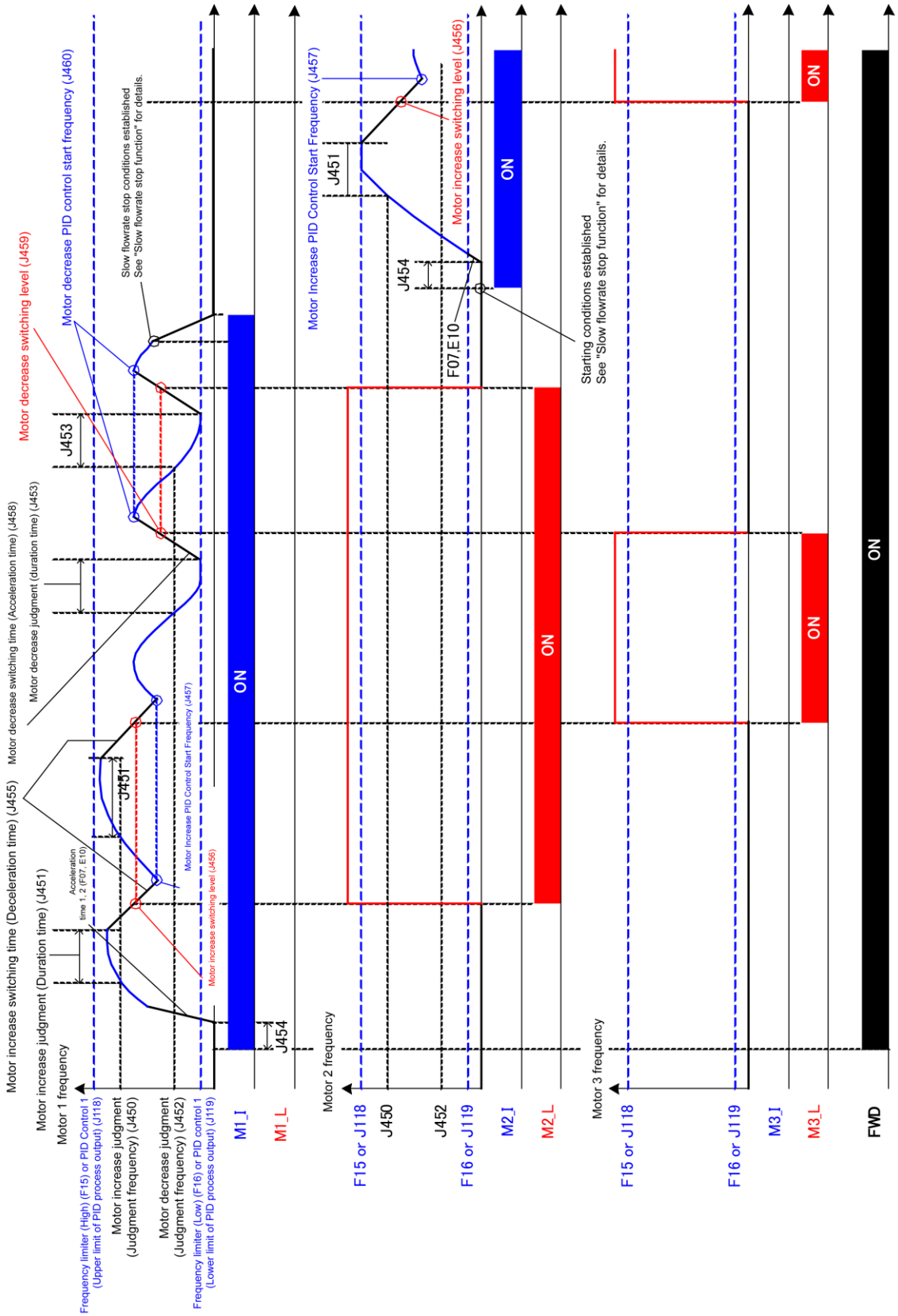

<Circulation inverter drive system, circulation inverter drive system + other commercial power supply drive function code settings>

(1) Function codes that need to be set

No.	Name	Setting	Description
J401	Pump control mode selection	2: Circulation inverter drive system 3: Circulation inverter drive system + other commercial power supply drive	
J101 to J138 J201 to J231	PID1 control PID2 control	Based on each code	Sets PID control based on the system design. It is also possible to switch between PID1 and PID2.
E20 to E24 E27 o01 to o07 o121 to o128	Terminal [Y1 to Y5] Terminal [30A/B/C] Terminal [Y6 to Y12] Terminal [O1 to O8]	88: AUX_L : Auxiliary pump drive signal 160 to 166: M1_I to M4_I : Inverter drive for motor 1 to 4 161 to 167: M1_L to M4_L : Commercial power drive for motor 1 to 4	Assigns output terminals to inverter drive start signals and commercial power drive start signals based on the number of pumps. When using the maximum configuration, a relay output card or digital output card is necessary. AUX_L is the auxiliary pump drive signal.
J411 to J414	Motor 1 to motor 4 mode selection	1: Enable	Sets based on the number of pumps. Only those enabled pumps are subject to control.

(2) Function codes that should be set

No.	Name	Setting	Description
J425	Motor switching procedure	1: Run time uniformity	The order in which commercial power-driven pumps are started and stopped is automatically adjusted so that the run time of each pump is uniform.

(3) Function codes for individual adjustment
Adjust the following as required.

No.	Name	Setting	Description
J450	Motor increase judgment (Judgment frequency)	0 to 599 Hz, 999 (Inherit): Based on J118	Adjusts the conditions for increasing the number of pumps. When inverter-driven pumps exceed J450 and J451 has elapsed, the conditions for increasing the number of commercial power-driven pumps are established. The initial value is established immediately when J118 (PID upper limit limiter) is reached.
J451	Motor increase judgment (Duration time)	0.00 to 6000 s	
J452	Motor decrease judgment (Judgment frequency)	0 to 599 Hz, 999 (Inherit): Based on J119	Adjusts the conditions for decreasing the number of pumps. When inverter-driven pumps drop below J452 and J453 has elapsed, the conditions for decreasing the number of commercial power-driven pumps are established. The initial value is established immediately when J119 (PID lower limit limiter) is reached.
J453	Motor decrease judgment (Duration time)	0.00 to 6000 s	
J461	Motor increase/decrease switching judgment non-responsive area width	0.0 (OFF), 0.1 to 50.0 %	If the SV value and PV value deviation is less than this setting, no judgment is made on increasing or decreasing the number of pumps.

No.	Name	Setting	Description
J454	Contact restart time when switching the motor	0.01 to 2.00 s	The start of inverter output can be delayed taking contactor delays into consideration when increasing the number of motors. Adjust in cases where contactor delays cause the inverter to trip.

(3) Function codes for individual adjustment (cont.)

No.	Name	Setting	Description
J455	Motor increase switching time (Deceleration time)	0.00 (Inherit): Based on F08 0.01 to 6000 s	This function code cannot be used with the circulation inverter drive system. Adjusts the sequence when increasing the number of pumps. When the conditions for increasing the number of commercial power-driven pumps are established, the inverter decelerates at J455. When the inverter has decelerated to J456, the commercial power-driven pump start signal is turned OFF. Deceleration then continues, and PID control is resumed when J457 is reached. J456 is a comparison of the percentage in the PID control range (lower limit to upper limit). With the initial value, the motor decelerates in the selected deceleration time until the PID lower limit frequency, and the start signal turns ON.
J456	Motor increase switching level	0 to 100%	
J457	Motor increase PID control start frequency	0 to 599 Hz, 999 (Inherit): Based on J452	
J458	Motor decrease switching time (Acceleration time)	0.00 (Inherit): Based on F07 0.01 to 6000 s	Adjusts the sequence when decreasing the number of pumps. When the conditions for decreasing the number of commercial power-driven pumps are established, the inverter accelerates at J458. When the inverter has accelerated to J459, the commercial power-driven pump start signal is turned ON. Acceleration then continues, and PID control is resumed when J460 is reached. J459 is a comparison of the percentage in the PID control range (lower limit to upper limit). With the initial value, the motor accelerates in the selected acceleration time until the PID upper limit frequency, and the start signal turns ON.
J459	Motor decrease switching level	0 to 100 999 (Inherit): Based on J456	
J460	Motor decrease PID control start frequency	0 to 599 Hz, 999 (Inherit): Based on J450	
J430	Stop of commercial power-driven motors	0: Commercial power drive stop 1: Commercial power drive stop only when inverter alarm occurs 2: Continue to run	Sets whether to stop commercial power-driven pumps by turning OFF the inverter run command, or with an alarm stoppage. With either setting, when coast to stop command BX is input to the inverter, all commercial power-driven pumps stop. With the initial value, commercial power-driven pumps are stop when stop conditions are established.
J436	Motor regular switching time	0.0: Disable 0.1 to 720.0 h 999 (TEST): Fixed at 3 min	When feedback signals continue to be stable, the run time for specific pumps ends up longer, without the number of commercial power-driven pumps being increased or decreased. By setting the time for this code, the time is forcibly increased or decreased if the set time is not increased or decreased.
E01～E09	Terminal [X1 to X9]	151 to 158: MEM 1 to 8 Pump control motor 1 to 8	Each pump can be individually severed from quantity control with an external signal. Only those pumps for which the MEM signal is ON

No.	Name	Setting	Description
			are subject to control.
J465	Auxiliary motor (Frequency operation level)	0.0 (OFF), 0.1 to 99.0 Hz	When all pumps subject to quantity control are running, and inverter output is J465 or higher, the auxiliary pump start signal is turned ON. Once pumps have decelerated from J465 to J466, the auxiliary pump start signal is turned OFF.
J466	Auxiliary motor (Hysteresis width)	0.0 to 599.0 Hz	
J467 J468 J469	Auxiliary motor (PV operation level, Connection timer, Interrupting timer)	0.00, 0.01 to 9999.0 0.00 to 2.00 s 0.00 to 2.00 s	The pressure may drop when inverter-driven pumps are replaced when using the circulation inverter drive system. In such cases, pressure drops are compensated by running the auxiliary motor. Refer to description of function codes found later in the manual for details.

Refer to the separate descriptions for details on individual function codes.

FUNCTION
F Codes
E Codes
C Codes
P Codes
H Codes
A Codes
b Codes
r Codes
J Codes
d Codes
U Codes
y Codes
K Codes

J401 = 52: Rotary operation communications-linked inverter circulation system

An inverter is connected individually to up to 3 pumps to be controlled, and a multi-drop connection with RS-485 communication is used. PID control is performed with the inverter registered in the Master, and run commands and frequency commands are sent to the remaining 2 Slaves. The frequency of the started inverter increases due to the PV signal drop, and the second inverter starts when the conditions for increasing the number of pumps are established. Up to 3 pumps are started sequentially, and by also outputting a start signal from the Master, the auxiliary pump can be started. The order in which pumps are started and stopped is circulated.

Even if an alarm stoppage occurs at the Master, operation can be still be continued with Slaves alone.

The merit of this system is that all inverters run, and therefore there are extremely few fluctuations in pressure when the number of pumps is increased or decreased, thus exerting minimal load on the piping. The demerit, on the other hand, is that each pump requires an inverter, leading to higher cost.

J401 = 54: Rotary operation communications-linked all motors simultaneous PID control system

The configuration is the same as that for the communications-linked inverter circulation system, but with this system, PID control is performed at the same frequency simultaneously for all pumps. Even if an alarm occurs, operation continues at the remaining inverters. In cases whether there is insufficient pressure, a start signal is output to the auxiliary pump, allowing a single pump to be added.

The merit of this system is that with circulation systems such as those using cooling water that are used to manage flow rate, water can be supplied will less power consumption by performing PID control for multiple pumps simultaneously, optimizing power consumption.

<Circulation inverter drive system maximum number of connections configuration diagram>

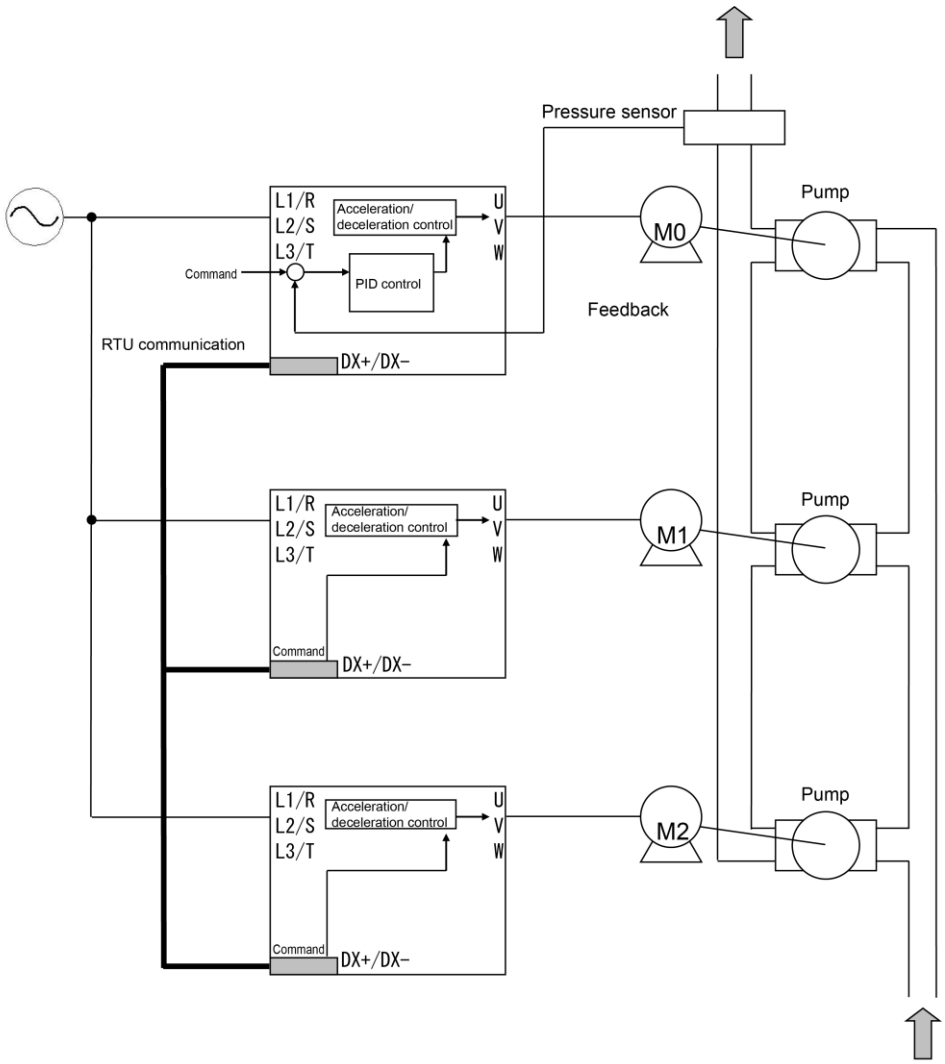

<Communications-linked circulation system inverter drive operation chart>

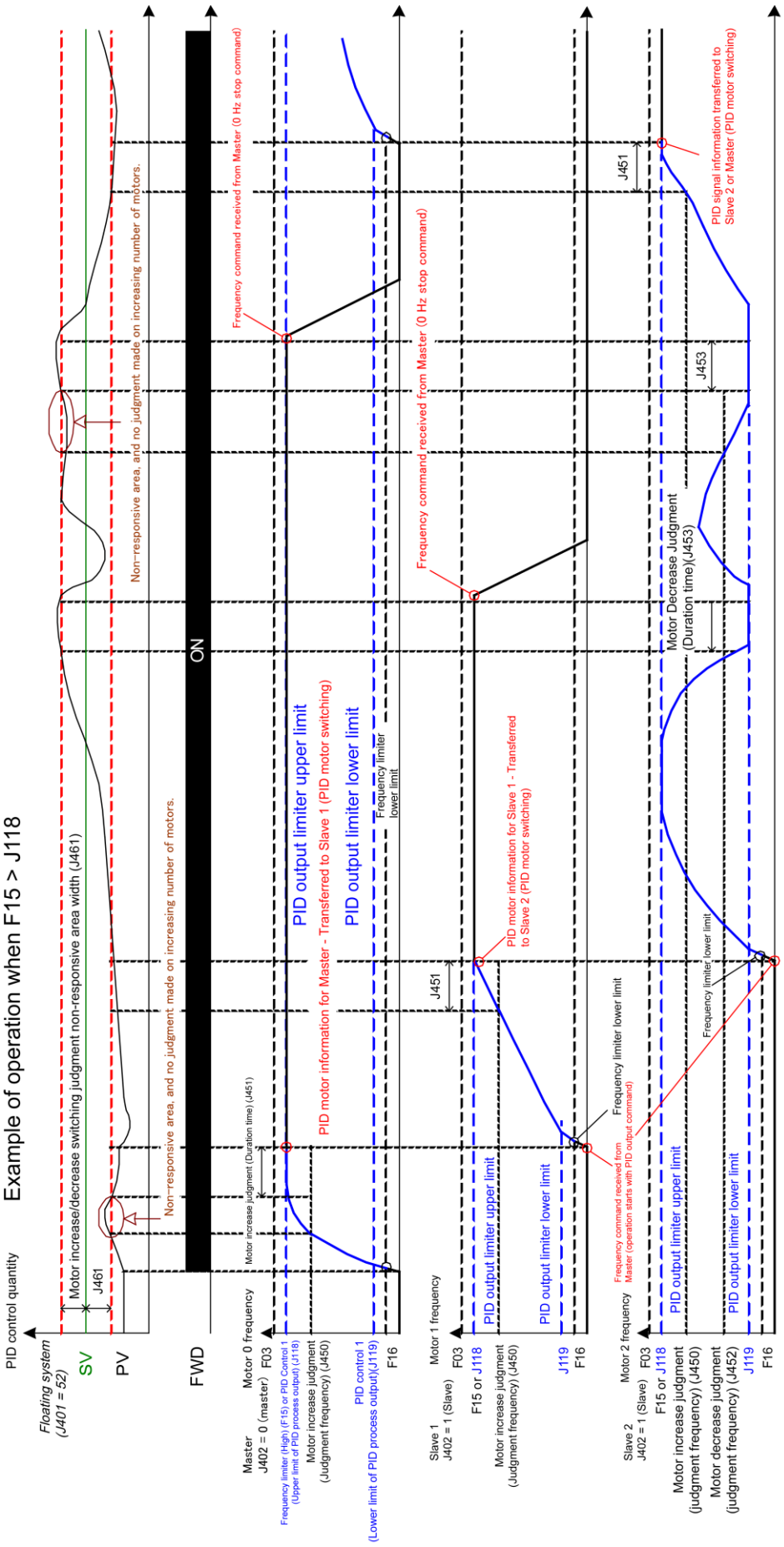

<Communications-linked all motors simultaneous PID control system operation chart>

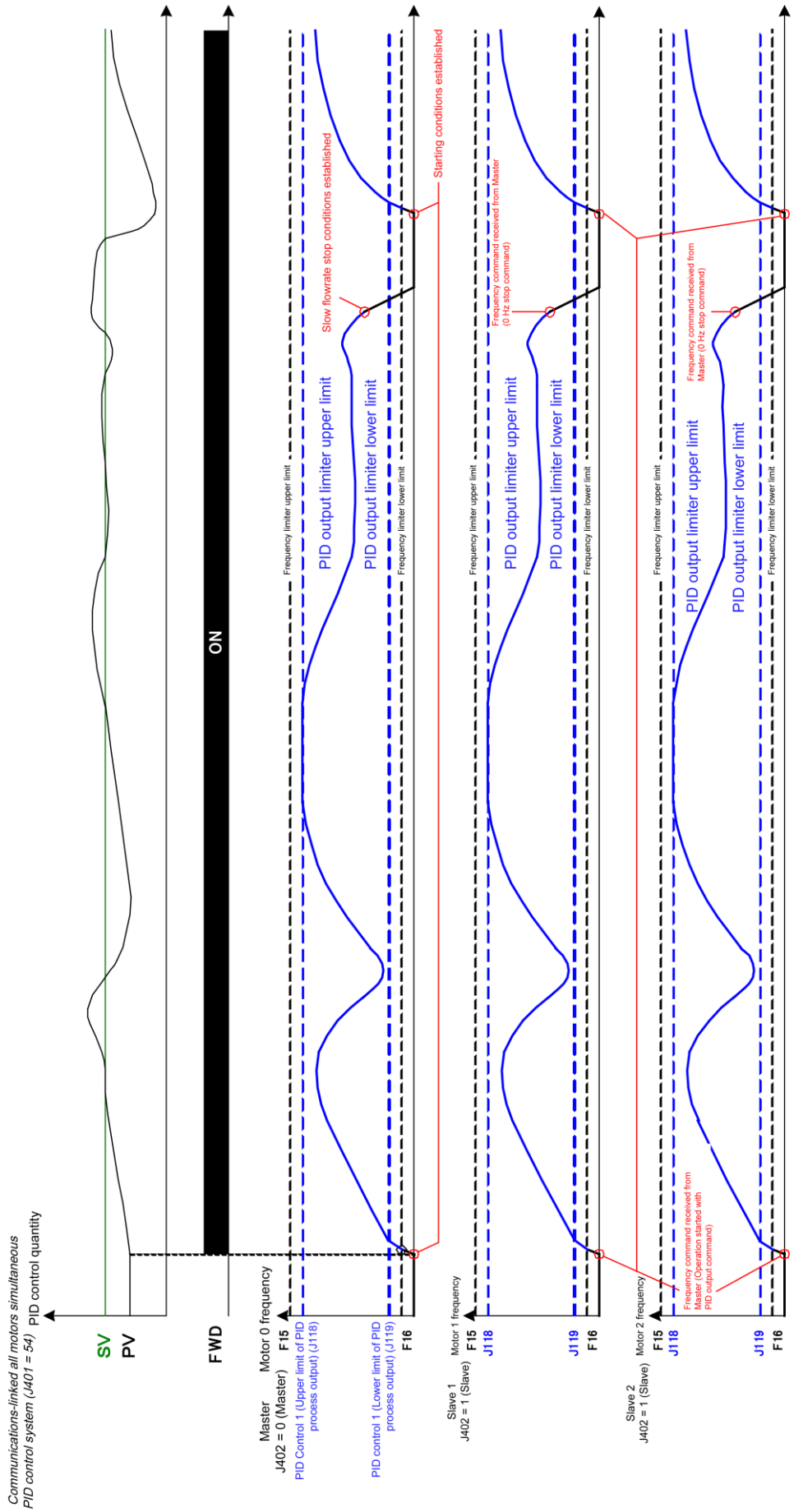

FUNCTION
F Codes
E Codes
C Codes
P Codes
H Codes
A Codes
b Codes
r Codes
J Codes
d Codes
U Codes
y Codes
K Codes

<Communications-linked circulation inverter drive system, communications-linked all motors simultaneous PID control system function code settings>

(1) With function codes that need settings to be specified, the settings differ for the Master and Slaves.
Master pump

No.	Name	Setting	Description
J401	Pump control mode selection	52: Communications-linked inverter circulation system 54: Communications-linked all motors simultaneous PID control system	
J101 to J138 J201 to J231	PID1 control PID2 control	Based on each code	PID control based on the system design. It is also possible to switch between PID1 and PID2.
J403	Number of slaves	1 to 3	
y20	RS-485 communication 2	50: Rotary operation	

Slave

No.	Name	Setting	Description
J401	Pump control mode selection	52: Communications-linked inverter circulation system 54: Communications-linked all motors simultaneous PID control system	
H30	Communication link function (Mode selection)	8: Enables run commands, enables frequency commands	Run commands and frequency commands are received.
J402	Communication master/slave selection	1: Slave	
y11	Station address	1 to 3	Set 1 to 3 for the respective motors 1 to 3.
y20	RS-485 communication 2	50	

(2) Function codes that should be set

No.	Name	Setting	Description
J425	Motor switching procedure	1: Run time uniformity	The order in which commercial power-driven pumps are started and stopped is automatically adjusted so that the run time of each pump is uniform.

(3) Function codes for individual adjustment

Adjust the following as required. No settings are necessary for the all motors PID control system.

No.	Name	Setting	Description
J450	Motor increase judgment (Judgment frequency)	0 to 599 Hz, 999 (Inherit): Based on J118	Adjusts the conditions for increasing the number of pumps. When inverter-driven pumps exceed J450 and J451 has elapsed, the conditions for increasing the number of commercial power-driven pumps are established. The initial value is established immediately when J118 (PID upper limit limiter) is reached.
J451	Motor increase judgment (Duration time)	0.00 to 6000 s	
J452	Motor decrease judgment (Judgment frequency)	0 to 599 Hz, 999 (Inherit): Based on J119	Adjusts the conditions for decreasing the number of pumps. When inverter-driven pumps drop below J452 and J453 has elapsed, the conditions for decreasing the number of commercial power-driven pumps are established. The initial value is established immediately when J119 (PID lower limit limiter) is reached.
J453	Motor decrease judgment (Duration time)	0.00 to 6000 s	
J461	Motor increase/decrease switching judgment non-responsive area width	0.0 (OFF), 0.1 to 50.0%	If the SV value and PV value deviation is less than this setting, no judgment is made on increasing or decreasing the number of pumps.
J436	Motor regular switching time	0.0: Disable 0.1 to 720.0 h 999 (TEST): Fixed at 3 min	When feedback signals continue to be stable, the run time for specific pumps ends up longer, without the number of commercial power-driven pumps being increased or decreased. By setting the time for this code, the time is forcibly increased or decreased if the set time is not increased or decreased.

Refer to the separate descriptions for details on individual function codes.

FUNCTION
F Codes
E Codes
C Codes
P Codes
H Codes
A Codes
b Codes
r Codes
J Codes
d Codes
U Codes
y Codes
K Codes

J401	Pump Control Mode Selection *101 Related function codes: E01 to E09, terminals [X1 to X9] (Function selection) E20 to 24, terminals [Y1 to Y5] (Function selection) E27, terminals [30A/B/C] (Ry output) H13 restart after momentary power failure (Waiting time) J101/J201 PID control (Mode selection)

*101: Supported with ROM0500 or later.

This function code selects the pump quantity control method.

• Data setting range: 0 to 54

J401 data	Function	Description
0	Disable	Number of pumps control (motor switching) is not performed.
1	Enable (fixed inverter drive system)	Cascade operation is performed with the fixed inverter drive system. Judgment on whether to increase or decrease the number of pumps is made with PID controller output.
2	Enable (circulation inverter drive system)	Cascade operation is performed with the circulation inverter drive system. Judgment on whether to increase or decrease the number of motors is output by the PID controller.
3	Enable (circulation inverter drive + other commercial power supply drive)	Cascade operation is performed with circulation inverter drive + other commercial power supply drive. Judgment on whether to increase or decrease the number of pumps is made with PID controller output.
11	Enable (fixed inverter drive system)	Cascade operation is performed with the fixed inverter drive system. Judgment on whether to increase or decrease the number of pumps is made with output frequency.
12	Enable (circulation inverter drive)	Cascade operation is performed with circulation inverter drive. Judgment on whether to increase or decrease the number of pumps is made with output frequency.
13	Enable (circulation inverter drive + other commercial power supply drive)	Cascade operation is performed with circulation inverter drive + other commercial power supply drive. Judgment on whether to increase or decrease the number of pumps is made with output frequency.
52	Enable (communications-linked inverter circulation system)	Rotary operation is performed with the communications-linked inverter circulation system.
54	Enable (communications-linked all motors simultaneous PID control system)	Rotary operation is performed with the all motors simultaneous PID control system.

Note

• With PID control (J01), the number of pumps is not controlled.

• Settings cannot be changed during operation.

• If performing pump control, set the pump control operation mode selection (J401), PID control 1 (Mode selection) (J101), and PID control 2 (Mode selection) (J201).

• If an alarm occurs at a Slave during rotary operation, an “SLA: Slave alarm” light alarm occurs at the Master.

• All functions for each J401 operation method

Depending on each J401 operation method, some functions are disabled. The following table shows which functions are enabled, and which are disabled.

Function code name	J401: Pump control operation mode selection				
	=1, 11	=2, 12	=3, 13	=52	=54
J101 to J138/J201 to J231	Y				
Boost function (J143 to J147)	Y				
Slow flowrate stop function (J149 to J154,J156 to J160/J249 to J251, J256 to J260)	Y				
Flow sensor input selection (J163 to J166)	Y				
Control of maximum starts per hour (motor) (J168, J169)	Y				
Dry pump protection (J176 to J180/J276 to J280)	Y			N	
End of curve protection (J182 to J186)	Y			N	
Filter clogging/anti jam (J188 to J195)	N				
Communication Master/Slave selection (J402)	N			Y	
Number of Slaves (J403)	N			Y	
Master input transmission selection (J404)	N			Y	
Motor 1 to 8 mode selection (J411 to J418)	Y			N	
Motor switching procedure (J425)	Y				N
Stop of commercial power-driven motors (J430)	Y			N	
Motor regular switching (J435 to J437)	Y				N
Motor increase judgment (J450, J451)	Y				N
Motor decrease judgment (J452, J453)	Y				N
Contactor waiting time when switching motor (J454)	N	Y		N	
Motor increase switching time (deceleration time) (J455)	Y	N	Y	N	
Motor increase switching level (J456)	Y	N	Y	N	
Motor increase PID control starting frequency (J457)	Y	N	Y	N	
Motor decrease switching time (acceleration time) (J458)	Y	Y	Y	N	
Motor decrease switching level (J459)	Y	Y	Y	N	
Motor decrease PID control start frequency (J460)	Y	Y	Y	N	
Motor increase/decrease switching judgment non-responsive area width (J461)	Y				N
Failure inverter judgment time (J462)	N			Y	N
Auxiliary motor (J465 to J467)	Y				
Auxiliary motor (J468, J469)	N	Y		N	

Y: Enabled, N: Disabled

FUNCTION
F Codes
E Codes
C Codes
P Codes
H Codes
A Codes
b Codes
r Codes
J Codes
d Codes
U Codes
y Codes
K Codes

J402	Communication Master/Slave Selection *101

*101: Supported with ROM0500 or later.

This function code sets the communication Master and Slaves when performing rotary operation. It is only necessary to set this function code when performing rotary operation. Set “0” for the inverter used as the Master, and set “1” for inverters used as Slaves.

- Data setting range: 0, 1

  0: Communication Master inverter

  1: Communication Slave inverter

J403	Number of Slaves *101

*101: Supported with ROM0500 or later.

This function code sets the number of Slaves when performing rotary operation. It is only necessary to set this function code when performing rotary operation.
(Set this function code only for the Master.) (There is no need to set for Slaves.)

• Data setting range: 1 to 3

J404	Master Input Permeation Selection *101

*101: Supported with ROM0500 or later.

When performing rotary operation, Master terminal input information is reflected from the Master to the run operation command (S06) for input terminals [X1] to [X9], [FWD], and [REV] for which this setting is specified at Slaves. With this, by inputting information to terminals at the Master, information can also be input simultaneously to the corresponding Slaves. Information input to Master terminals is also input to Slaves, and therefore the same settings should be specified for terminals [X1] to [X9], [FWD], and [REV] (Function selection) (E01 to E9, E98, E99) for both the Master and Slaves.

• Data setting range: 0 to 07FF (hexadecimal format)

10	9	8	7	6	5	4	3	2	1	0
X9	X8	X7	X6	X5	X4	X3	X2	X1	REV	FWD

(When all bits are “1”, information input at the Master is reflected at Slaves.)

(Example)
If Master terminal X1, X2, and X4 information is reflected to Slave 1,
and Master terminal X4, X5, and X7 information is reflected to Slave 2,

0 0010 1100 (binary format) = 02C (hexadecimal format) at Slave 1, and therefore J404 is set to “002C”,
and 1 0110 0000 (binary format) = 160 (hexadecimal format) at Slave 2, and therefore J404 is set to “0160”.

Note

- When setting [FWD] or [REV] for J404, do not set "FWD", "REV", "FWD2", or "REV2” for terminal [FWD] or [REV] function codes E98 or E99 for either the Master or Slaves. By failing to observe this, run commands will continue to be input to Slaves also while terminal block operation (F02 = 1) is being performed at the Master, and run commands are being input, and Slaves will not function as specified with pump control commands from the Master.

J411 to J418	Motor 1 Mode Selection to Motor 8 Mode Selection *101

*101: Supported with ROM0500 or later.

These function codes select operation performed by motors subject to pump control. When the value is set to “2: Forced drive ON” (forced commercial power drive), pump commercial power drive signals can be output, regardless of whether run commands are output. It is only necessary to set this function code when performing cascade operation.

J411 to J418 data	Function
0	Disable (always OFF)
1	Enable
2	Forced drive ON (forced commercial power drive)

Note
- Forced drive ON (forced commercial power drive) is a function used to forcibly turn ON relay outputs in order to connect motors to a commercial power supply. Consequently, even if the run command is OFF, relay outputs are turned ON, and motors are driven with commercial power.

[1] Pump control motor drive permission command 1 to 8 for pump control motors (“MEN1” to “MEN8”)

The operation performed for each motor subject to motor control can be selected from pump control motor drive permission command 1 to 8 with terminal input. Motor fallback is possible with a combination of these pump control motor drive permission commands and the motor mode selection. Fallback is a term used to describe the state where only the relevant motor stops, and operation is being continued in terms of the system.

<Pump control motor drive permission command operation block diagram>

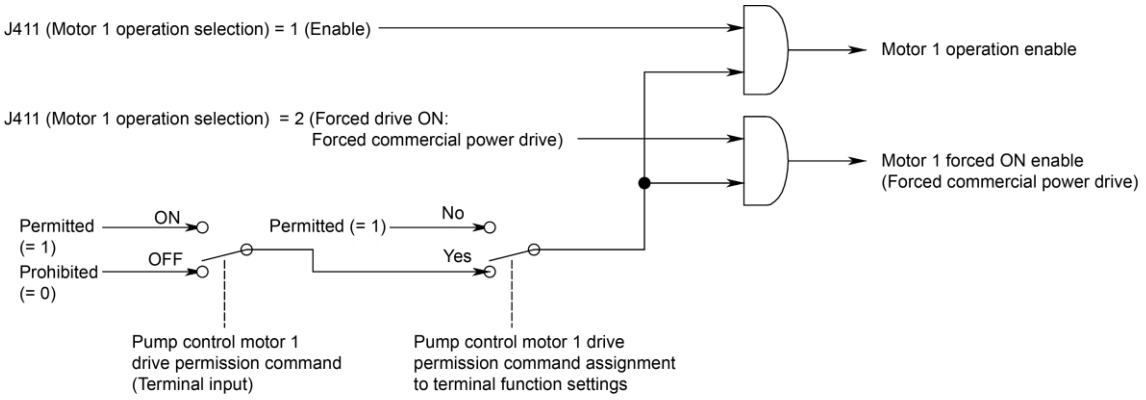

Note) When there are multiple assignments, AND operation is used for permission.
(Permission is granted when all assigned terminal inputs are ON.)

[2] PID control operation

With the circulation inverter drive system (J401 = 2), status (1) or (2) will occur depending on the motor mode selection (J411 to J418).

(1) Permission not currently granted for any motor
If drive permission has not been granted for any motor (pump control motor drive permission command 1 to 8 = OFF (“MEN1” to “MEN8”) or the motor mode selection (J411 to J418) is disabled), there will be no motors for which pump control is possible, and therefore PID control is not performed.

(2) Performing forced commercial power drive for all motors
If the run command is ON, and the status of all motors is changed from forced commercial power drive to enabled (J411 to J418 changed from “1” to “2”), judgment on whether to increase or decrease the number of motors is made immediately based on PID control.

J425	Motor Switching Procedure *101

*101: Supported with ROM0500 or later.

With pump control, operation is performed while switching multiple motors. If increasing or decreasing the number of motors being run, motors to be driven, and motors to be stopped are set with the motor switching procedure (J425). By setting this, the cumulative run time can be balanced out for each motor.

• Data setting range: 0 to 3

J425 data	Function
0	Fixed order <When increasing the number of motors> Motors are increased sequentially from the smallest motor number. (motor 1 → motor 2 → motor 2...) <When decreasing the number of motors> Motors are decreased sequentially from the largest motor number. (motor 3 → motor 2 → motor 1...)
1	Run time uniformity (balances out cumulative run time for each motor) <When increasing the number of motors> The motor with shortest run time is selected from motors that are not being driven. <When decreasing the number of motors> The motor with longest run time is selected from motors that are being driven.
2	Fixed order (motor switching when slow flowrate stop occurs) The operation is the same as when J425 is set to “0”. However, the motor being driven is not only switched to the next motor when increasing the number of motors, but also when a slow flowrate stop occurs.
3	Run time uniformity (motor switching when slow flowrate stop occurs) The operation is the same as when J425 is set to “1”. However, the motor being driven is not only switched to the motor with shortest run time when increasing the number of motors, but also when a slow flowrate stop occurs.

J430	How to Stop the Motor *101 Related function codes: J411 to J418 (Motor mode selection)

*101: Supported with ROM0500 or later.

When performing cascade operation, this function code sets the stoppage method when the run command turns OFF, or when an alarm occurs.

• Data setting range: 0 to 2

J430 data	Stoppage type	Description	
		Motor being driven by inverter	Motor being driven with commercial power
0	When run command OFF	The motor decelerates and stops. The inverter drive motor signal (“M1_I” to “M4_I”) is turned OFF at the same time as inverter output stops.	When the inverter stops output, all motor commercial power signals (“M1_L” to “M8_L”) are turned OFF simultaneously.
	When alarm occurs	Output to the motor is stopped, and the inverter drive motor signal (“M1_I” to “M4_I”) is turned OFF.	When the inverter stops output, all motor commercial power signals (“M1_L” to “M8_L”) are turned OFF simultaneously.
1	When run command OFF	The motor decelerates and stops. The inverter drive motor signal (“M1_I” to “M4_I”) turns OFF at the same time as inverter output stops.	Operation continues.
	When alarm occurs	Output to the motor is stopped, and the inverter drive motor signal (“M1_I” to “M4_I”) is turned OFF.	When the inverter stops output, all motor commercial power signals (“M1_L” to “M8_L”) are turned OFF simultaneously.
2	When run command OFF	The motor decelerates and stops. The inverter drive motor signal (“M1_I” to “M4_I”) turns OFF at the same time as inverter output stops.	Operation continues.
	When alarm occurs	Output to the motor is stopped, and the inverter drive motor signal (“M1_I” to “M4_I”) is turned OFF.	Operation continues.

FUNCTION
F Codes
E Codes
C Codes
P Codes
H Codes
A Codes
b Codes
r Codes
J Codes
d Codes
U Codes
y Codes
K Codes

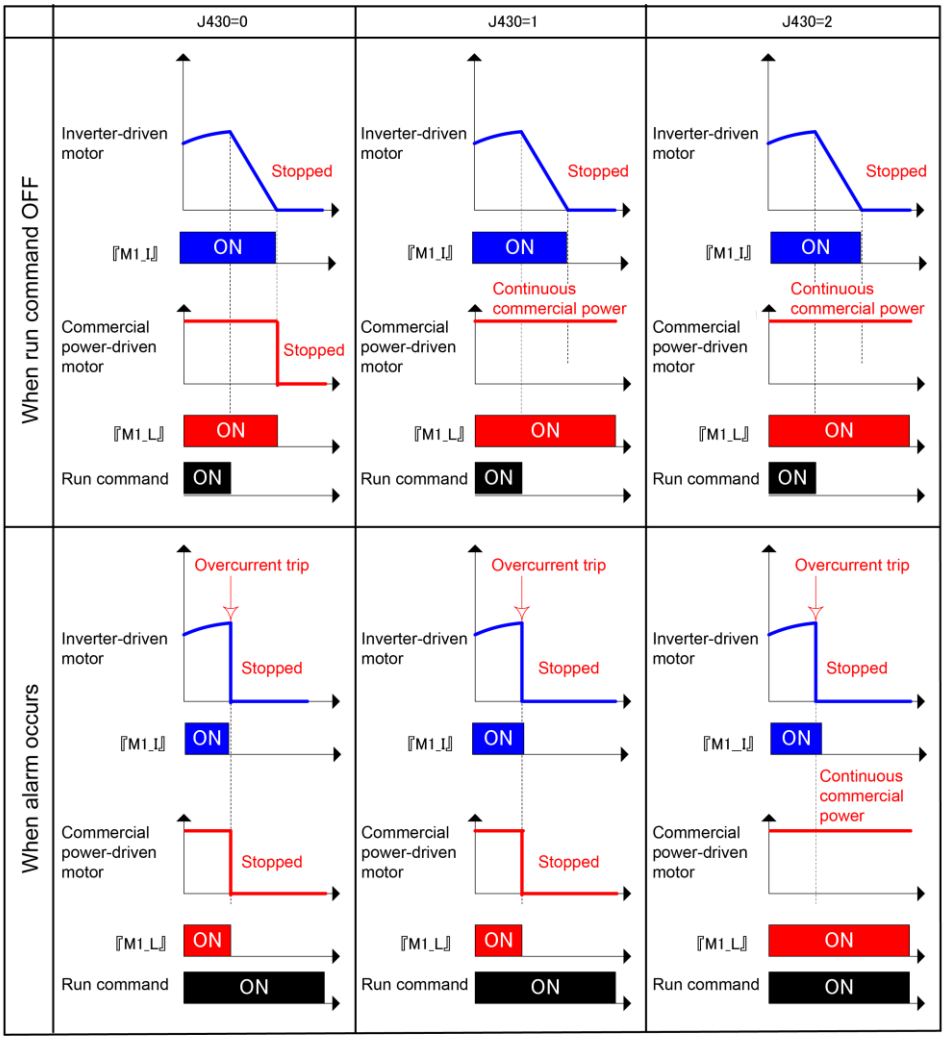
J430=0
J430=1
J430=2
When run command OFF
When alarm occurs
Inverter-driven motor
Stopped
『M1_I』
ON
Commercial power-driven motor
Continuous commercial power
『M1_L』
Run command
Overcurrent trip

Motors that are being driven with the commercial power supply (incl. forced drive ON motors) can be stopped with the following methods.

(1) When commercial power-driven motors are turned OFF individually

- The motor mode selection is disabled (J411 to J418 = 0).
- The pump control motor drive permission command (“MEN1” to “MEN8”) is turned OFF.

(2) When all commercial power-driven motors are turned OFF at once

- Pump control is disabled (J401 = 0 or J101/J201 = 0).
- BX is input.

The above function codes (J401, J101/J201) cannot be changed while pumps are running.

J435 **J436** **J437**	**Motor Regular Switching Mode Selection** ***101** **Motor Regular Switching Time** ***101** **Motor Regular Switching Signal Output Time** ***101** **Related function codes: J401 (Pump Control Mode Selection)** **J411 to J418 (Motor Mode Selection)** **J425 (Motor Operating Time Procedure)** **J454（Contact restart time when switching the motor)** **J458 (Motor Decrease Switching Time (Acceleration time))** **J480 to J488 (Motor Cumulative Run Time)**

*101: Supported with ROM0500 or later.

When the state in which the number of motors that is running does not change continues for the motor regular switching time (J436), one running motor is switched for one stopped motor. By doing so, it is possible to balance out the run time for the pumps connected to each motor.

■ Motor regular switching mode selection (J435)

J435 sets motors subject to switching when the number of running motors does not change continues if circulation inverter drive system (J401 = 2), or circulation inverter drive system + other commercial power supply (J401 = 3), or communications-linked circulation inverter drive system (J401 = 52) is set by selecting the pump control operation.

If the fixed inverter drive system (J401 = 1) is set with the pump control operation selection, commercial power-driven motors are switched. (This is the same as when J435 is set to “2”.)

- Data setting range: 1, 2, 3

J435 data	Description
1	**When performing cascade operation, inverter-driven motors are switched.** **When performing rotary operation, motors under PID control are switched.**
2	When performing cascade operation, commercial power-driven motors are switched. When performing rotary operation, motors that are running at maximum output frequency are switched.
3	When performing cascade operation, all motors (inverter-driven motors/commercial power-driven motors) are switched. When performing rotary operation, all motors (motors under PID control/motors running at maximum output frequency) are switched.

■ Motor regular switching time (J436)

The time for which judgment of motor regular switching is performed is set in 0.1 hour units. If the state in which there is no increase or decrease in the number of motors that are running exceeds the motor regular switching time (J436), motors are switched periodically.

• Data setting range: 0.0 (OFF), 0.1 to 720.0 h, 999: Test

J436 data	Description
0.0 (OFF)	**Disable**
0.1 to 720.0 h	Enable: Switching time
999: Test	Enable: Switching time fixed at 3 minutes

■ Motor regular switching signal output time (J437)

J437 sets the motor regular switching signal output time (duration). After the motor regular switching time (J436) has elapsed, a “MCHG” advance switching warning signal is output, and motor switching begins when the output time has elapsed.

• Data setting range: 0.00 to 600.00 s

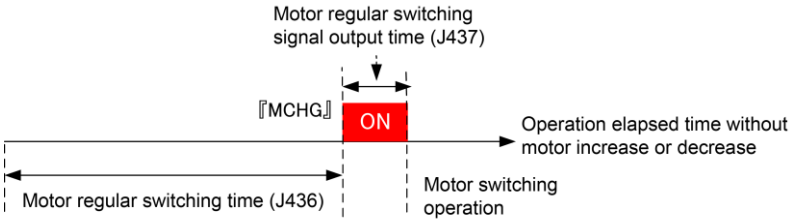

Motors for which forced drive ON (Forced commercial power drive) (J411 to J418 = 2) is selected with motor mode selection are not subject to motor run time switching.

[3] Motors subject to motor run time switching

If the state in which there is no increase or decrease in the number of motors that are running exceeds the motor run time switching time (J436), motor switching is performed for the following motors.

<table>
<tr><th>Motor regular switching time (J436)</th><th colspan="3">Description</th></tr>
<tr><td>0.0 (OFF)</td><td colspan="3">Motor regular switching is not performed.</td></tr>
<tr><td rowspan="9">0.1 to 720.0 h</td><td colspan="3">If the state in which there is no change in the number of motors that are running exceeds the time set for the motor regular switching time (J436), motor regular switching is performed.
Running motors with longest cumulative running time are stopped, and motors with shortest cumulative running time among those that are stopped are started.
However, motors are not switched if the motors to be stopped have shorter (or same) cumulative run time than the applicable running motors.
Furthermore, if there are multiple motors for which the longest cumulative run time and shortest cumulative run time are the same, motors with the lowest number are switched.</td></tr>
<tr><td>Pump control mode selection (J401)</td><td>Motor regular switching mode selection (J435)</td><td>Running motors to be switched</td></tr>
<tr><td>1: Fixed inverter drive</td><td>-</td><td>Commercial power-driven motor</td></tr>
<tr><td rowspan="3">2: Circulation inverter drive system
3: Circulation inverter drive system + other commercial power supply drive</td><td>1: Commercial power-driven pumps</td><td>Commercial power-driven motors</td></tr>
<tr><td>2: Inverter-driven pumps</td><td>Inverter-driven motors</td></tr>
<tr><td>3: All pumps</td><td>Inverter-driven motors
Commercial power-driven motors</td></tr>
<tr><td rowspan="3">52: Communications-linked circulation inverter drive system</td><td>1: Commercial power-driven pumps</td><td>Pumps running at maximum output frequency</td></tr>
<tr><td>2: Inverter-driven pumps</td><td>Pumps under PID control</td></tr>
<tr><td>3: All pumps</td><td>Motors under PID control
Pumps running at maximum output frequency</td></tr>
<tr><td>54: Communications-linked all motors simultaneous PID control system</td><td colspan="2">Motor regular switching is not performed.</td></tr>
<tr><td>999: Test</td><td colspan="3">The same switching operation as that for the motor regular switching function operation (J436 = 0.1 to 720.0 h) is performed. However, if the state in which the number of running motors does not change continues for 3 minutes, running motors are switched. This setting is used for checking operation when inverters are starting up.</td></tr>
</table>

[4] Canceling the regular switching operation

When the length of time that the state in which there is no increase or decrease in the number of motors that are running reaches the motor run time switching time (J436), motors are switched periodically. The time counted up can be cleared by turning ON the “MCLR” motor run time switching time clear command. By clearing the count, motor regular switching can be canceled. Furthermore, by turning ON the “MCLR” motor run time switching time clear command even while the “MCHG” advance switching warning signal is being output, motor regular switching can be canceled.

Note
- If the “MCLR” motor run time switching time clear command ON state continues, the time during which there is no change in the number of motors that are running is always cleared, and therefore motor regular switching is not performed.

[5] Regular switching with input terminal

Even if the state in which there is no increase or decrease in the number of motors that are running exceeds the Motor Regular Switching Time (J436), motor regular switching can be performed by changing the “PCHG” pump control switching command from ON to OFF. The count for the length of time that the state in which there is no increase or decrease in the number of motors that are running is cleared at this time.

J450	**Motor Increase Judgment (Judgment frequency)**	***101**
J451	**(Duration time)**	***101**
J452	**Motor Decrease Judgment (Judgment frequency)**	***101**
J453	**(Duration time)**	***101**

*101: Supported with ROM0500 or later.

When using cascade operation (J401 = 1, 2, 3), or rotary operation communications-linked inverter circulation system (J401 = 52), the number of motors is increased or decreased when the PID controller output frequency (PID output (MV)) equal to or higher/lower than the motor increase/decrease judgment (Judgment frequency) (J450/J452), and that status exceeds the motor increase/decrease judgment (Duration) (J451/J453).

If J401 = 11, 12, or 13, a comparison is made not with MV, but with the actual output frequency.

Note
- If the deviation between the PID command value (SV value) and PID feedback value lies within the non-responsive area, motor switching based on judgment of whether to increase or decrease the number of motors is not performed.

<Upper/lower limit limiter operation block diagram>

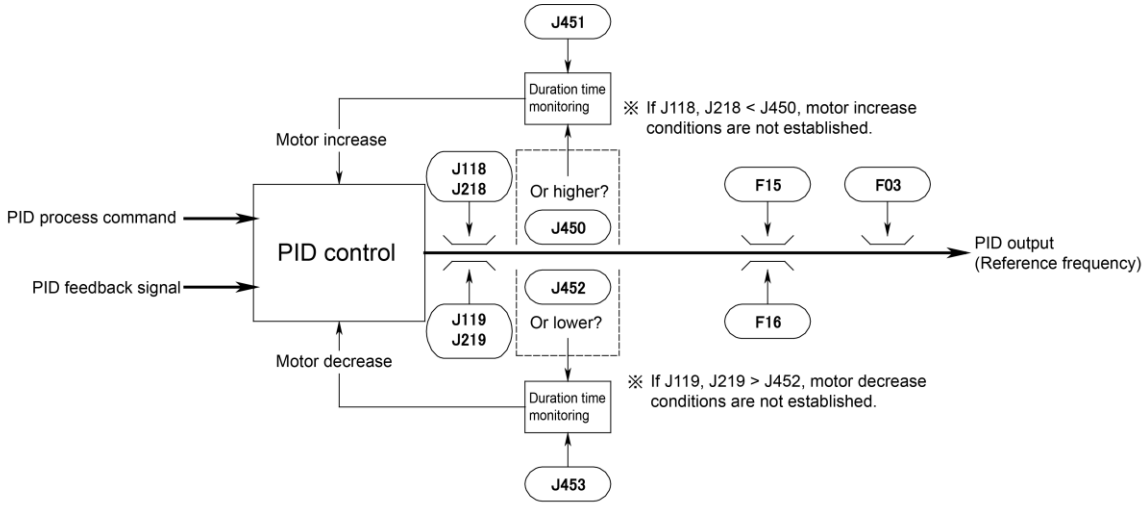

■ Motor increase judgment (judgment frequency) (J450)

J450 sets the frequency for judging whether to increase the number of motors.

・ Data setting range: 0 to 599 Hz, 999 (Inherit)

J450 data	Description
0 to 599 Hz	Frequency for judging whether to increase the number of motors
999 (Inherit)	Based on PID control (PID output limiter upper limit) (J118/J218)

■ Motor increase judgment (duration time) (J451)

J451 sets the duration for the frequency for judging whether to increase the number of motors.

• Data setting range: 0.00 to 6000 s

■ Motor Decrease Judgment (Judgment frequency) (J452)

J452 sets the frequency for judging whether to decrease the number of motors.

• Data setting range: 0 to 599 Hz, 999 (Inherit)

J452 data	Description
0 to 599 Hz	Frequency for judging whether to decrease the number of motors
999 (Inherit)	Based on PID control (PID output limiter lower limit) (J119, J219)

■ Motor decrease judgment (duration time) (J453)

J453 sets the duration for the frequency for judging whether to decrease the number of motors.

• Data setting range: 0.00 to 6000 s

J454	Contact Restart Time when Switching the Motor *101

*101: Supported with ROM0500 or later.

With the circulation inverter drive system (J401 = 2, 12) and circulation inverter drive + other commercial power supply drive (J401 = 3, 13), if increasing the number of motors or performing motor regular switching, motors are run after delaying the start of inverter drive or commercial power supply drive. This function code sets this delay time (relay and Electromagnetic Contactor ON delay time).

• Data setting range: 0.01 to 2.00 s

J455 J456 J457	Motor Increase Switching Time (Deceleration time) *101 Motor Increase Switching Level *101 Motor Increase PID Control Start Frequency *101

*101: Supported with ROM0500 or later.

■ Motor Increase Switching Time (Deceleration time) (J455)

When increasing the number of fixed inverter driven (J401 = 1, 11) or circulation inverter drive + other commercial power supply driven (J401 = 3, 13) motors, inverter-driven motors decelerate in the motor increase switching time (deceleration time) (J455), and deceleration is then stopped after the commercial power-driven motors have started, and the output frequency has reached the motor increase PID control starting frequency (J457). At this point, PID control is resumed, and the inverter-driven motors run at the PID control MV frequency.

• Data setting range: 0.00 (Inherit), 0.01 to 6000 s

J455 data	Description
0.01 to 6000 s	Inverter-driven motor deceleration time before starting commercial power-driven motors based on motor increase judgment
0.00 (Inherit)	Based on currently selected deceleration time

■ Motor increase switching level (J456)

When increasing the number of fixed inverter driven (J401 = 1, 11) or circulation inverter drive + other commercial power supply driven (J401 = 3, 13) motors, when the inverter-driven motor output frequency reaches the motor increase switching level (J456) (J456) or less, the contactor for the motor being added turns ON.

• Data setting range: 0 to 100%

Switching frequency [Hz] = (J456/100%) x ((J118, J218) - (J119, J219)) + (J119, J219)
* J118: PID control 1 (PID output limiter upper limit), J119: PID control 1 (PID output limiter lower limit)
* J128: PID control 2 (PID output limiter upper limit), J219: PID control 2 (PID output limiter lower limit)

■ Motor increase pid control start frequency (J457)

When increasing the number of fixed inverter driven (J401 = 1, 11) or circulation inverter drive + other commercial power supply driven (J401 = 3, 13) motors, J457 sets the frequency at which PID control is performed.

・ Data setting range: 0 to 599 Hz, 999 (Inherit)

J457 data	Description
0 to 599 Hz	PID control starting frequency after starting commercial power-driven motors based on motor increase judgment
999 (Inherit)	Motor decrease judgment (Judgment frequency) (J452) is dependent on the motor increase PID control starting frequency.

J458	**Motor Decrease Switching Time (Acceleration time)**	***101**
J459	**Motor Decrease Switching Level**	***101**
J460	**Motor Decrease PID Control Start Frequency**	***101**

*101: Supported with ROM0500 or later.

■ Motor decrease switching time (Acceleration time) (J458)

When decreasing the number of cascade operation motors, inverter-driven motors accelerate at the motor decrease switching time (acceleration time) (J458). After the inverter-driven motor power is turned OFF, control switches to PID control and operation continues when the output frequency reaches the motor decrease PID starting frequency (J460). At this point, PID control is resumed, and the inverter-driven motors run at the PID control MV frequency.

• Data setting range: 0.00 (Inherit), 0.01 to 6000 s

J458 data	Description
0.01 to 6000 s	Inverter-driven motor acceleration time before stopping commercial power-driven motors based on motor decrease judgment
0.00 (Inherit)	Dependent on F07: Acceleration time 1 (E10: Acceleration time 2 when RT1 is ON)

■ Motor decrease switching level (J459)

When decreasing the number of cascade operation motors, if the inverter-driven motor output frequency reaches the motor decrease switching level (J459) or higher, the contactor for the motor to be decreased turns OFF.

・ Data setting range: 0 to 100%, 999 (Inherit)

J459 data	Description
0 to 100%	Inverter-driven motor frequency level when stopping commercial power-driven motors based on motor decrease judgment
999 (Inherit)	The motor increase switching level (J456) is dependent on the motor decrease switching level (J459).

Switching frequency [Hz] = (J459/100%) x ((J118, J218) - (J119, J219)) + (J119, J219)

■ Motor decrease PID control start frequency (J460)

When decreasing the number of cascade operation motors, J460 sets the frequency at which PID control is started.

・ Data setting range: 0 to 599 Hz, 999 (Inherit)

J460 data	Description
0 to 599 Hz	PID control starting frequency after stopping commercial power-driven motors based on motor decrease judgment
999 (Inherit)	Dependent on motor increase judgment (Judgment frequency) (J450)

J461	Motor Increase/Decrease Switching Judgment Non-responsive Area Width *101

*101: Supported with ROM0500 or later.

With PID control, if the deviation between the PID command value (SV value) and PID feedback value is less than this setting, motor increase/decrease judgment is not performed.

• Data setting range: 0.0 (OFF), 0.1 to 50.0%

J461 data	Description
0.1 to 50.0%	The PID feedback value full scale is 100% with deviation between the PID command value (SV value) and PID feedback value.
0.0 (OFF)	Disable (motor increase judgment is always performed)

J462	Failure Inverter Judgment Time *101

*101: Supported with ROM0500 or later.

When the communications-linked inverter circulation system (J401 = 52) is selected, if motors running under PID control are in a PID control hold state due to an inverter limiting operation (current limiting, etc.), J462 sets the time for system exception (switching motor under PID control).
If another motor than can be run exists, and the abnormal equipment judgment time (J462) has elapsed, the current motor under PID control is switched to another motor.
If this number of motors is changed, the number of motors is not increased or decreased, and motor regular switching is not performed, even if the conditions for increasing or decreasing the number of motors, or for periodic switching are established. Furthermore, if the abnormal equipment judgment time (J462) is OFF, switching is not performed for this number of motors. Furthermore, motors under PID control are not switched even if a PID control hold is applied while waiting for auto search to be performed.

• Data setting range: 0.0 (OFF), 0.5 to 600.0 s

FUNCTION
F Codes
E Codes
C Codes
P Codes
H Codes
A Codes
b Codes
r Codes
J Codes
d Codes
U Codes
y Codes
K Codes

J465 J466	Auxiliary Motor (Frequency operation level) *101 (Hysteresis width) *101

*101: Supported with ROM0500 or later.

If all set motors are running, and the output frequency (cascade operation: inverter-driven motor output frequency, rotary operation: output frequency of motors under PID control) reaches the J465 level, the “AUX_L” auxiliary motor drive signal turns ON. If output frequency is lower than that set for J465 to J466, the “AUX_L” auxiliary motor drive signal turns OFF. However, if PID operation is disabled (J101/J201 = 0), or pump control operation is disabled (J401 = 0), the “AUX_L” auxiliary motor drive signal is always OFF.

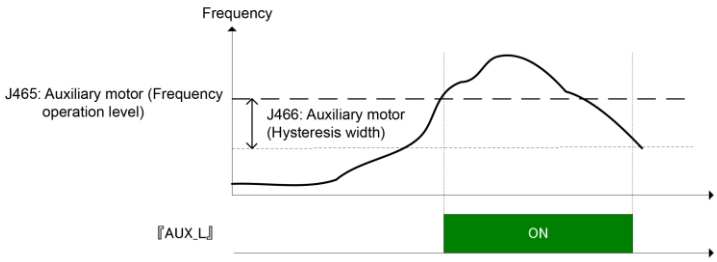

■ Auxiliary motor (frequency operation level) (J465)

J465 sets the frequency for judging whether to perform auxiliary motor drive. If the inverter-driven motor output frequency reaches this value or higher, the auxiliary motor is driven.

• Data setting range: 0.0 (OFF), 0.1 to 599.0 Hz

■ Auxiliary motor (hysteresis width) (J466)

J466 sets the frequency width for judging whether to stop the auxiliary motor. If the inverter-driven motor output frequency is lower than that set for J465 to J466, the auxiliary motor is stopped.

• Data setting range: 0.0 to 599.0 Hz

J467	**Auxiliary Motor (PV operation level)**	***101**
J468	**(Connection timer)**	***101**
J469	**(Interrupting timer)**	***101**

*101: Supported with ROM0500 or later.

If the circulation inverter drive system (J401 = 2, 12) is set with the pump control operation selection, inverter-driven motors coast to a stop when the number of motors is being increased. The auxiliary motor is driven to suppress pressure fluctuations during the time until this motor is driven by the commercial power supply (contactor waiting time when switching motor (J454)). Auxiliary motor drive is not performed when the number of motors is decreased. The auxiliary motor drive and stop timing is judged based on the connection level and shutdown level. This judgment is made during a fixed period of time after the inverter-driven motor has coasted to a stop. This time is 10 times the larger of the contactor waiting time when switching motor (J454) or auxiliary motor (connection timer) (J468).

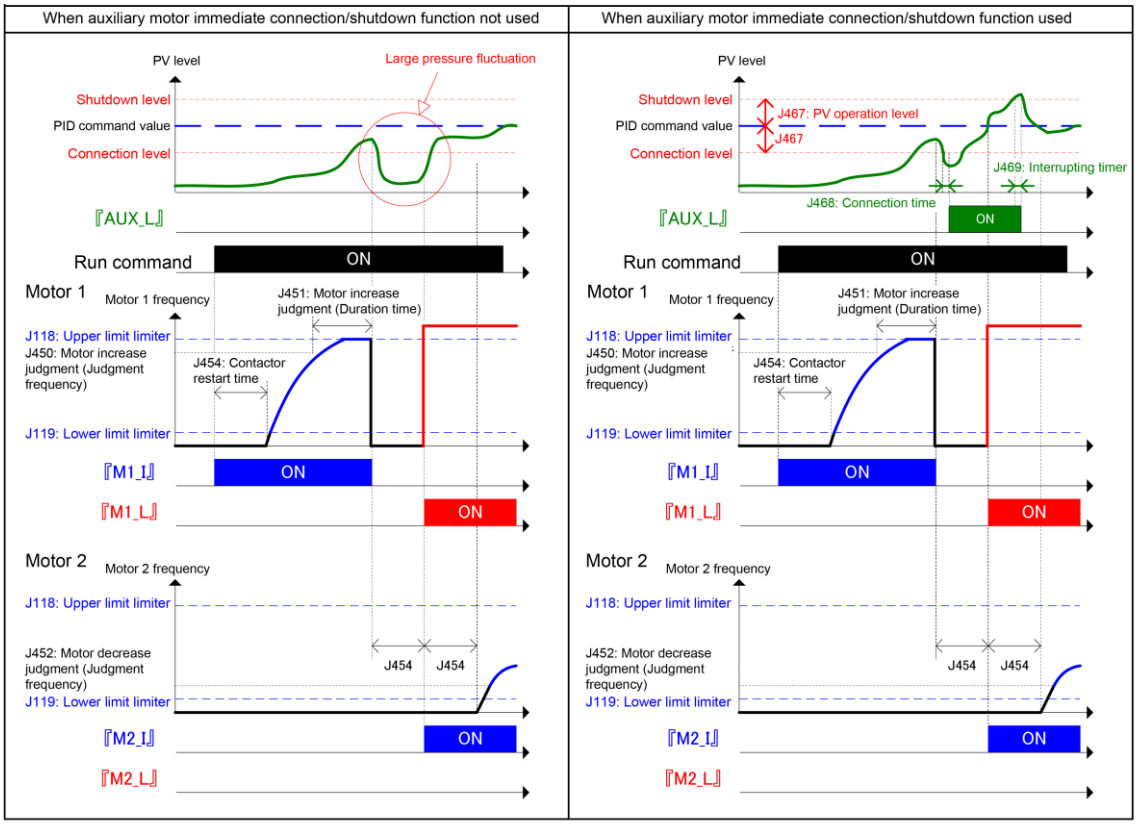

FUNCTION
F Codes
E Codes
C Codes
P Codes
H Codes
A Codes
b Codes
r Codes
J Codes
d Codes
U Codes
y Codes
K Codes

J480 to J488	Motor Cumulative Run Time (Motor 0 to 8) *101

*101: Supported with ROM0500 or later.

With pump control, the cumulative run time of each motor is calculated (J480 to J488). This motor cumulative run time can be used for maintenance planning.

The motor cumulative run time is counted when gate is ON, and condensation prevention is not being performed.

Furthermore, run time is calculated even if motors are being driven by the commercial power supply with the “M□_L” output signal from the inverter.

The cumulative run time is calculated in the range 0 to 65,535 hours, and run time continues to be counted up after zero setting when 65,535 hours have elapsed. The cumulative run time is displayed in hours.

The cumulative run time can be set to the desired value from the keypad. When replacing machine parts, the initial time at such times as when replacing the inverter can be set to the desired value.

A correspondence table for each cumulative run time and motor number for each pump control operation selection (J401) setting is shown below.

Function code		Pump control operation mode selection (J401)		
		1, 11	2, 3, 12, 13	52, 54
J480	Motor cumulative run time (motor 0)	Inverter-driven motor	-	Master
J481	Motor cumulative run time (motor 1)	M1_L motor	M1_I and M1_L motor	Slave 1
J482	Motor cumulative run time (motor 2)	M2_L motor	M2_I and M2_L motor	Slave 2
J483	Motor cumulative run time (motor 3)	M3_L motor	M3_I and M3_L motor	-
J484	Motor cumulative run time (motor 4)	M4_L motor	M4_I and M4_L motor	-
J485	Motor cumulative run time (motor 5)	M5_L motor	-	-
J486	Motor cumulative run time (motor 6)	M6_L motor	-	-
J487	Motor cumulative run time (motor 7)	M7_L motor	-	-
J488	Motor cumulative run time (motor 8)	M8_L motor	-	-

J490	**Relay ON Maximum Cumulation Count**	**(Y1RY Y2RY)**	***101**
J491		**(Y3RY Y4RY)**	***101**
J492		**(Y5A 30ABC)**	***101**
J493		**(Y6RY to Y12RY)**	***101**

*101: Supported with ROM0500 or later.

The cumulative ON/OFF count for terminal [Y5A] and [30ABC] output, and for the relay output option (OPC-RY, OPC-RY2) can be monitored.
This can be set as the approximate life expectancy for each relay. Counting is stopped when the cumulative count reaches one million times. Furthermore, the cumulative relay ON count can be cleared with the keypad, or reset by the user when replacing the relay. The relay ON count is retained in the memory when the inverter is turned OFF, but the count is memorized in units of 16 times, and therefore an error of up to 16 times occurs each time the power is turned OFF.

Note • The maximum cumulative relay ON count (J490 to J493) can only be reset with the keypad.

■ Relay ON Maximum Cumulation Count (Y1RY Y2RY) (J490)

Of each inverter unit terminal [Y1] or [Y2] output (E20, E21) ON count, the larger cumulative value is displayed.
“1.000” indicates 1,000 times.
When the OPC-RY card is installed in the optional A port, the relay ON count is added up as relay output Y1RY and Y2RY.

■ Relay ON Maximum Cumulation Count (Y3RY Y4RY) (J491)

Of each inverter unit terminal [Y3] and [Y4] output (E22, E23) ON count, the larger cumulative value is displayed.
“1.000” indicates 1,000 times.

When the OPC-RY card is installed in the optional B port, the relay ON count is added up as relay output Y3RY and Y4RY.

■ Relay ON Maximum cumulation count (Y5A 30ABC) (J492)

Of each inverter unit relay output terminal [Y5A] and [30ABC] output (E24, E27) ON count, the larger cumulative value is displayed. “1.000” indicates 1,000 times.

■ Relay ON Maximum cumulation count (Y6RY to Y12RY) (J493)

Of the cumulative ON count of each relay on the relay output option (OPC-RY2), the larger cumulative value is displayed.
“1.000” indicates 1,000 times.

Output terminal	Contact life expectancy	Contact capacity
Transistor output ([Y1], [Y2], [Y3], [Y4])	- (Refer to the following when installing OPC-RY.)	-
Contact output ([Y5A], [30ABC])	200,000 times (if switched ON and OFF at one-second intervals)	250 VAC, 0.3A 48 VDC, 0.5 A
Relay output option OPC-RY	200,000 times (if switched ON and OFF at one-second intervals)	250 VAC, 0.3A 48 VDC, 0.5 A
Relay output option OPC-RY2	200,000 times (if switched ON and OFF at one-second intervals)	250 VAC, 0.3A 48 VDC, 0.5 A

FUNCTION
F Codes
E Codes
C Codes
P Codes
H Codes
A Codes
b Codes
r Codes
J Codes
d Codes
U Codes
y Codes
K Codes

5.3.13 J5 codes (Applied functions)

J501	**External PID Control 1 (Mode selection)**	***101**
J601	**External PID Control 2 (Mode selection)**	***101**
J651	**External PID Control 3 (Mode selection)**	***101**

*101: Supported with ROM0500 or later.

In addition to PID control (J101, J201), the inverter is equipped with 3 PID control channels capable of controlling external devices such as dampers or valves. There is no need for a device such as an external PID controller, and peripheral equipment can be controlled by the inverter.

* Under PID control, the inverter detects the state of a control target object with a sensor or similar device and compares it with the commanded value (e.g., temperature control command). If there is any deviation between them, PID control operates so as to minimize it. That is, it is a closed loop feedback system that matches a controlled variable (feedback amount). Process control such as flow control, pressure control, and temperature control) can be performed.

• Data setting range: 0 to 32

J501, J601, J651 data	Function
0	Disable
1	Process control (normal operation)
2	Process control (inverse operation)
11	Process control (normal operation) (inverter link operation) Process control is also linked to inverter running “RUN”.
12	Process control (inverse operation) (inverter link operation) Process control is also linked to inverter running “RUN”.
21	Process control (normal operation) (external signal command) Process control runs when the digital input terminal external PID control ON command is ON.
22	Process control (inverse operation) (external signal command) Process control runs when the digital input terminal external PID control ON command is ON.
31	Process control (normal operation) (external signal command + inverter link operation) Process control is also linked to inverter operation when the digital input terminal external PID control ON command is ON, and to inverter running “RUN”.
32	Process control (inverse operation) (external signal command + inverter link operation) Process control is also linked to inverter operation when the digital input terminal external PID control ON command is ON, and to inverter running “RUN”.

If setting the external PID control 1 to 3 ON command, it is necessary to assign “EPID1-ON”, “EPID2-ON”, and “EPID3-ON” to the digital input terminals. (📖 Function codes E01 to E09)

External PID control 1: External PID control 1 ON command “EPID1-ON” (data = 201)

External PID control 2: External PID control 2 ON command “EPID2-ON” (data = 211)

External PID control 3: External PID control 3 ON command “EPID3-ON” (data = 221)

Note If data 11, 12, 31, and 32 are set, PID control is held (I item hold) while the inverter is decelerating. The only component of PID control that is held is decelerate-to-stop if the run command is turned OFF. PID control is not held for decelerate-to-stop for which the reference frequency is changed.

<External PID process control block diagram>

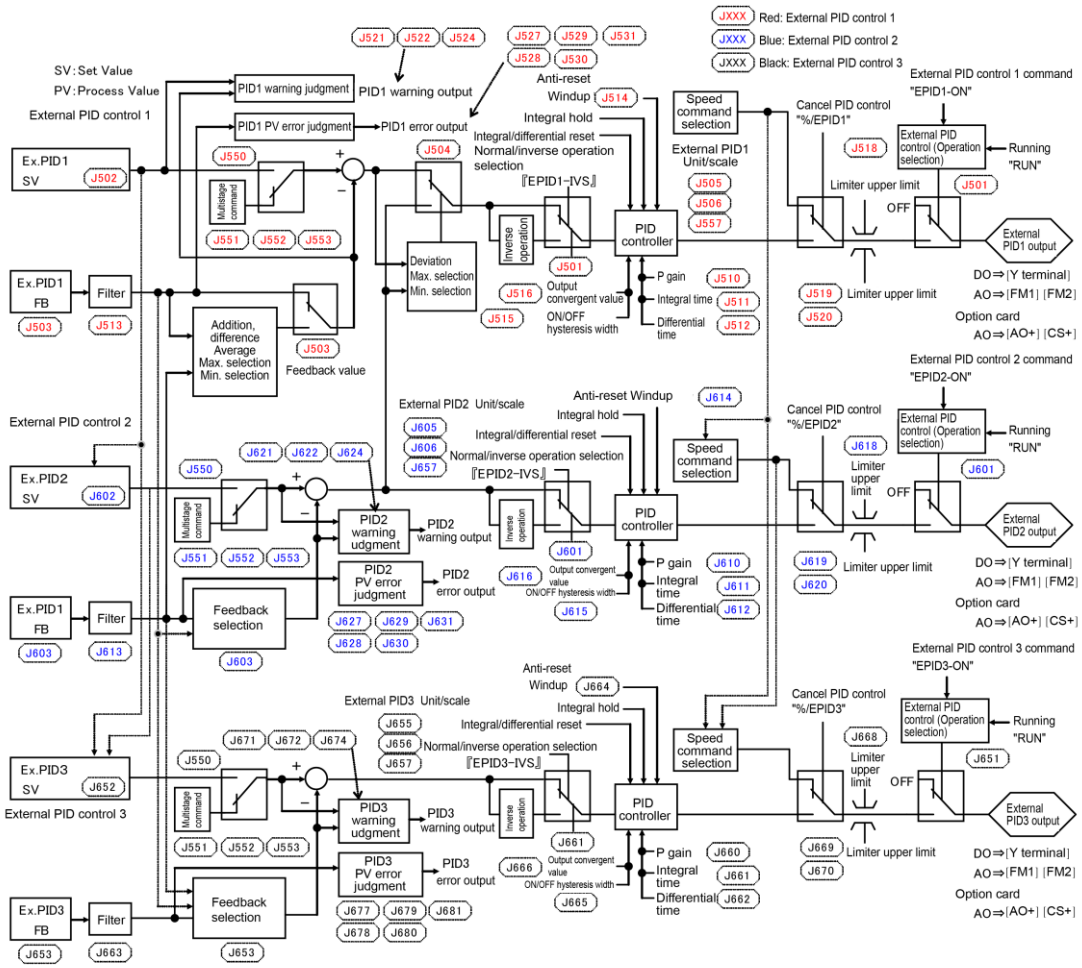

FUNCTION
F Codes
E Codes
C Codes
P Codes
H Codes
A Codes
b Codes
r Codes
J Codes
d Codes
U Codes
y Codes
K Codes

J502	**External PID Control 1 (Remote command selection)**	***101**
J602	**External PID Control 2 (Remote command selection)**	***101**
J652	**External PID Control 3 (Remote command selection)**	***101**

*101: Supported with ROM0500 or later.

These function codes select the method used for setting external PID control command values. Function code J502 sets external PID control 1, J602 sets external PID control 2, and J652 sets external PID control 3.

• Data setting range: 0 to 112

J502	J602	J652	Function
0	0	0	External PID command with keypad External PID command with keypad ▲/▼ key
3	3	3	External PID command with UP/DOWN command PID control command values of 0 to 100% can be set with values converted to physical quantities etc. based on the display unit and scale with the “UP” UP command and “DOWN” DOWN command.
4	4	4	Command via communications link J502 → Communication function code (S30): Transmission data 20000d/100% PID command J602 → Communication function code (S31): Transmission data 20000d/100% PID command J652 → Communication function code (S32): Transmission data 20000d/100% PID command
51	51	51	External PID command 1 (analog input terminal [12], [C1] (C1 function), [V12], [C1] (V3 function)) Terminal [12] input voltage value: 0 to ±10 VDC, PID100% command/±10 VDC Terminal [C1] (C1 function) input current value: 4 to 20 mA DC, PID100% command/20 mA DC 0 to 20 mA DC, PID100% command/20 mA DC Terminal [V2] input voltage value: 0 to ±10 VDC, PID100% command/±10 VDC Terminal [C1] (V3 function) input voltage value: 0 to ±10 VDC, PID100% command/±10 VDC
-	52	52	External PID command 2 (analog input terminal [12], [C1] (C1 function), [V12], [C1] (V3 function))
-	-	53	External PID command 3 (analog input terminal [12], [C1] (C1 function), [V12], [C1] (V3 function))
-	111	111	External PID control 1 command (J502)
-	-	112	External PID control 2 command (J602)

Refer to function codes C59 and C60 for details on the terminal [12] scale setting.

Refer to function codes C65 and C66 for details on the terminal [C1] (C1 function) scale setting.

Refer to function codes C71 and C72 for details on the terminal [V2] scale setting.

Refer to function codes C85 and C86 for details on the terminal [C1] (V3 function) scale setting.

[1] External PID commands with keypad (J502, J602, J652 = 0)

Using the keypad ▲/▼ key, PID control commands of 0 to 100% can be set with values converted to an indication that is easily recognized such as physical quantities using the display unit and scale.

[2] External PID commands with UP/DOWN control (J502, J602, 2 = 3)

When UP/DOWN control is selected as an external PID speed command, turning the terminal command “UP” or “DOWN” ON causes the external PID control command value to change within the range of the minimum scale to maximum scale.

External PID control 1 (J502 = 3)
This can be set in physical quantity units using the display unit (J505) and scale (J506, J507).

External PID control 3 (J602 = 3)
This can be set in physical quantity units using the display unit (J605) and scale (J606, J607).

External PID control 3 (J652 = 3)
This can be set in physical quantity units using the display unit (J655) and scale (J656, J657).

To set external PID commands with UP/DOWN control, the “UP” and “DOWN” commands must be assigned to digital input terminals. (📖 Function code E01 to E09 data = 17, 18)

“UP”	"DOWN"	Operation
Data = 17	Data = 18	
OFF	OFF	Retains the current external PID control command value.
ON	OFF	Increases the external PID control 1 command value at change rate of 0.1%/0.1 s to 1%/0.1 s.
OFF	ON	Decreases the external PID control 1 command value at change rate of 0.1%/0.1 s to 1%/0.1 s.
ON	ON	Retains the current external PID control 1 command value.

Note Setting of commands with UP/DOWN control is common to PID control 1 and PID control 2 (J102, 202).

[3] External PID commands from communication

External PID control 1 (J502, J602, J652 = 4)
Function code for communication (S30): Transmission data 20000d/100% PID command

📖 Refer to the “RS-485 Communication User’s Manual” for details on the communication format, etc.

FUNCTION
F Codes
E Codes
C Codes
P Codes
H Codes
A Codes
b Codes
r Codes
J Codes
d Codes
U Codes
y Codes
K Codes

[4] PID commands with analog input (J502, J602, J652＝51)

When any analog input (voltage input to terminals [12], [V2], and [C1] (V3 function), or current input to terminal [C1] (C1 function)) for PID command 1 (J02 = 1) is used, it is possible to arbitrarily specify the PID command by multiplying by the gain and adding the bias. The polarity can be selected, and the filter and offset can be adjusted. In addition to J502, J602, and J652 settings, it is also necessary to select external PID process command 1 to 3 for each analog setting (function codes E61, E62, E63, E66). Refer to the descriptions of function codes E61, E62, E63, and E66 for details.

Adjustable elements of PID command values

Input terminal	Input range	Bias		Gain		Polarity	Filter	Offset	Range selection
		Bias	Reference point	Gain	Reference point				
[12]	0 to +10 V, -10 to +10 V	C55	C56	C32	C34	C35	C33	C31	-
[C1] (C1 function)	4 to 20 mA, 0 to 20 mA	C61	C62	C37	C39	-	C38	C36	C40
[V2]	0 to +10 V, -10 to +10 V	C67	C68	C42	C44	C45	C43	C41	-
[C1] (V3 function)	0 to +10 V, -10 to +10 V	C82	C83	C75	C77	C78	C76	C74	-

■ Offsets (C31, C36, C41, C74)

C31, C36, C41, and C74 set offsets for analog input voltage and current. These offsets also apply to signals sent from the external equipment.

■ Filters (C33, C38, C43, C76)

C33, C38, C43, and C76 provide the filter time constants for analog input voltage and current. The larger the time constant, the slower the response. Specify the proper filter time constant taking into account the response speed of the machine (load). If the input voltage fluctuates due to line noise, increase the time constant.

■ Polarity selection (C35, C45, C78)

C35, C45, and C78 configure the polarity, and therefore the input range for analog input voltage.

C35, C45, C78 data	Terminal input specification
0	-10 V to +10 V
1	0 to +10 V (Negative value of voltage is regarded as 0 V)

■ Range selection: terminal [C1] (C1 function)

C40 configures the input range for analog input current of terminal [C1] (C1 function).

C40 data	Terminal input range
0	4 to 20 mA
1	0 to 20 mA

■ Gain, bias

Terminal	Details
[12]	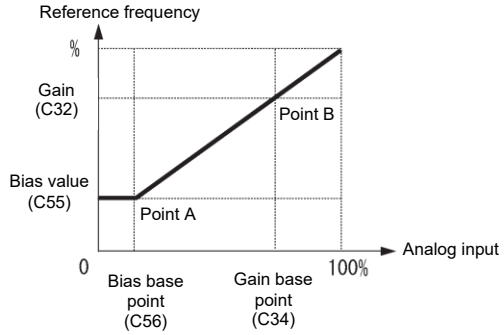
[C1] (C1 function)	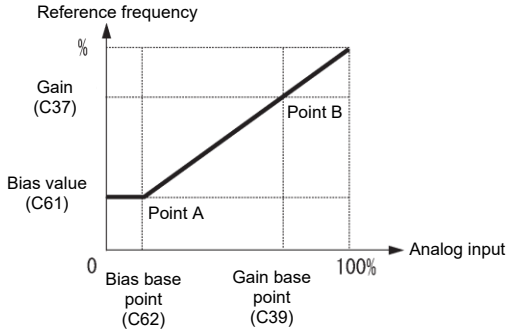
[V2]	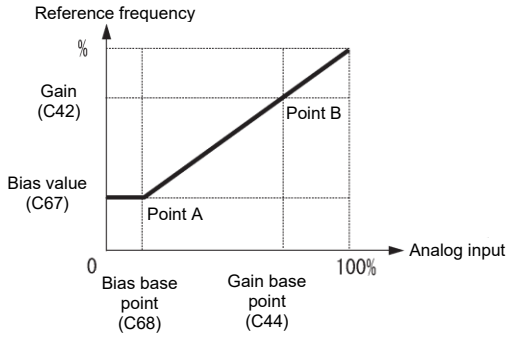
[C1] (V3 function)	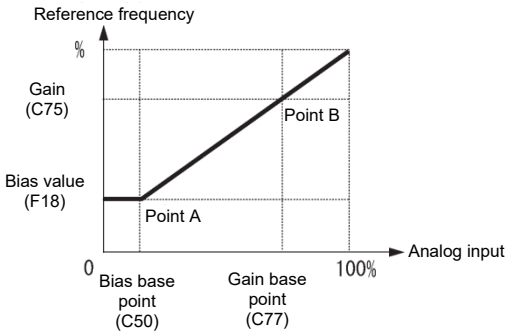

FUNCTION
F Codes
E Codes
C Codes
P Codes
H Codes
A Codes
b Codes
r Codes
J Codes
d Codes
U Codes
y Codes
K Codes

(Example) In order to allocate for the range of 0 to 100% to the range of 1 to 5 V at terminal [12], set as follows.

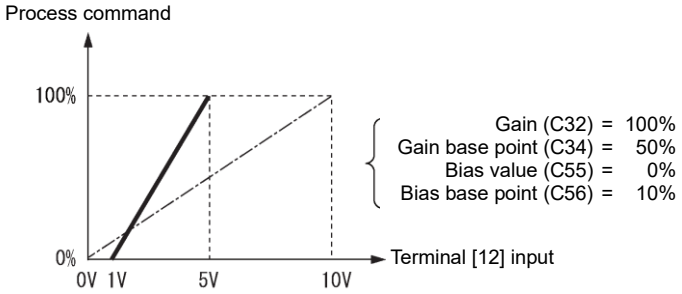

Selecting feedback terminals

For feedback control, determine the connection terminal according to the type of the sensor output.

• If the sensor is a current output type, use the inverter current input terminal [C1] (C1 function) .

• If the sensor is a voltage output type, use inverter voltage input terminal [12] and [V2], or [C1] (V3 function).

📖 Refer to the descriptions of function codes E61, E62, E63, and E66 for details.

<Application example: Process control> (for air conditioners, fans and pumps)

The operating range for PID process control is internally controlled as 0% through 100%. For the given feedback input, determine the operating range to be controlled by means of gain adjustment.

Example: When the external sensor has the output range of 1 to 5 V:

- As this is voltage input, use terminal [12].
- Set the gain (C32 for analog input adjustment) to 200% in order to make 5 V of the maximum output of the external sensor to be 100% of input scale. The terminal [12] input specification is 0 to 100% at 0 to 10 V, and therefore the gain should be set to 200% in the ratio of 10 V/5 V. (Note also that any bias setting does not apply to feedback control.)

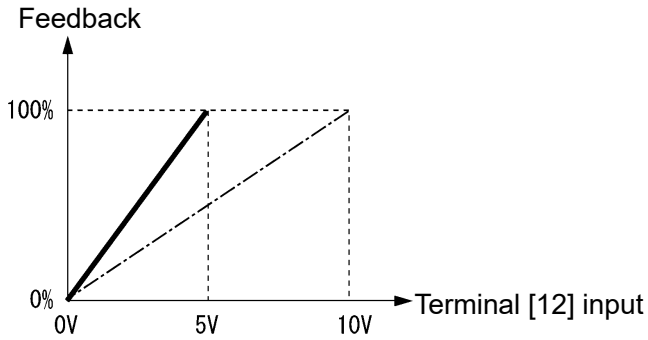

Example 1: When an external sensor has the output range of -7 to +7 VDC:

- As this is voltage input, use terminal [12].
- When the external sensor has ±7 VDC of bipolar output, inside the inverter ±7 VDC should be equivalent to ±100%. To convert ±7 VDC from the output of an external sensor to ±100%, the gain setting (C32) is set in $\frac{10\ \mathrm{V}}{7\ \mathrm{V}} \fallingdotseq 143\%$.

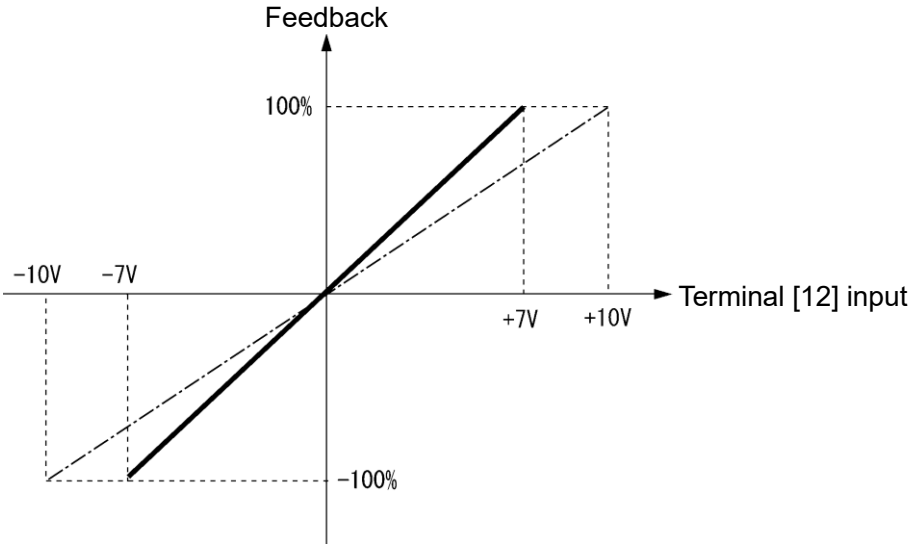

FUNCTION
F Codes
E Codes
C Codes
P Codes
H Codes
A Codes
b Codes
r Codes
J Codes
d Codes
U Codes
y Codes
K Codes

Example 2: When an external sensor has the output range of 0 to 10 VDC:

• As this is voltage input, use terminal [12].

• When the external sensor has unipolar output, inside the inverter it is controlled within the range of 0 to 100%.

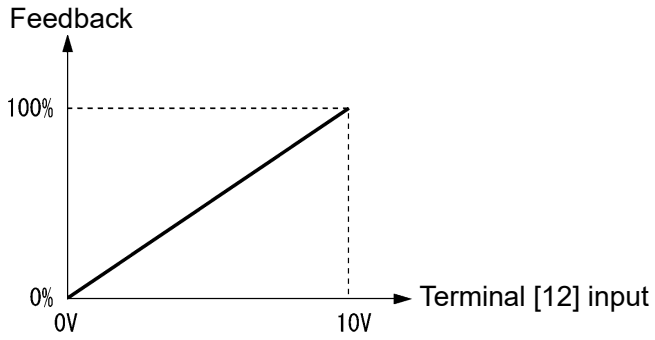

PID display coefficient and monitoring

When monitoring PID commands and feedback values, set the display unit, maximum scale, and minimum scale to convert the displayed content to easy-to-understand physical quantities such as temperature.

• Display unit, maximum scale, and minimum scale function codes by terminal

	Display unit	Maximum scale	Minimum scale
Terminal [12]	C58	C59	C60
Terminal [C1] (C1 function)	C64	C65	C66
Terminal [V2]	C70	C71	C72
Terminal [C1] (V3 function)	C84	C85	C86

Refer to function code E43 for details on the monitor.

J503	**External PID Control 1 (Feedback selection)**	***101**
J603	**External PID Control 2 (Feedback selection)**	***101**
J653	**External PID Control 3 (Feedback selection)**	***101**

*101: Supported with ROM0500 or later.

These function codes select the external PID control feedback values. Function code J503 sets external PID control 1, J603 sets external PID control 2, and J653 sets external PID control 3.

• Data setting range: 51 to 64

J503	J603	J653	Function
51	51	51	External PID feedback value 1
-	52	52	External PID feedback value 2
-	-	53	External PID feedback value 3
60	-	-	Addition (external PID feedback value 1 + external PID feedback value 2)
61	-	-	Subtraction (external PID feedback value 1 - external PID feedback value 2)
62	-	-	Average ((external PID feedback value 1 + external PID feedback value 2) / 2)
63	-	-	Maximum (the larger value of external PID feedback value 1 and 2 is used)
64	-	-	Minimum (the smaller value of external PID feedback value 1 and 2 is used)

<External PID control 1 feedback selection area (J503) block diagram>

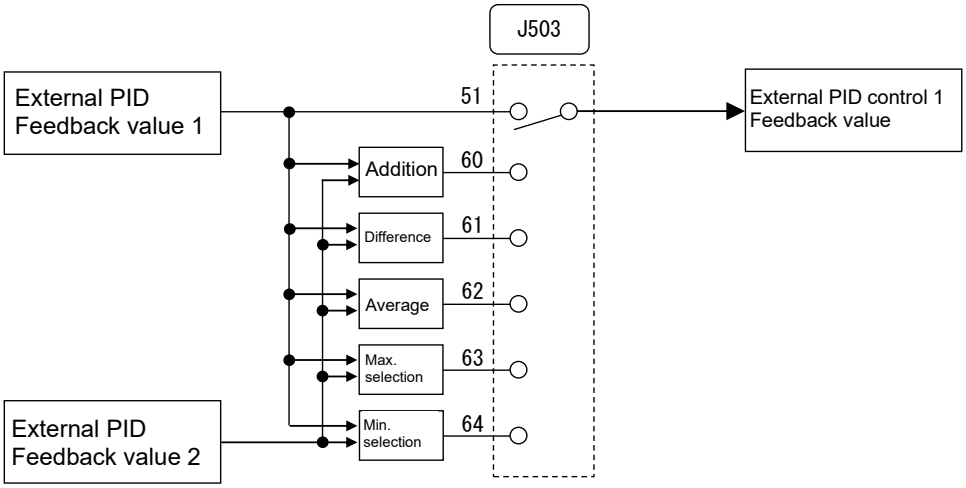

<External PID control 2 feedback selection area (J603) block diagram>

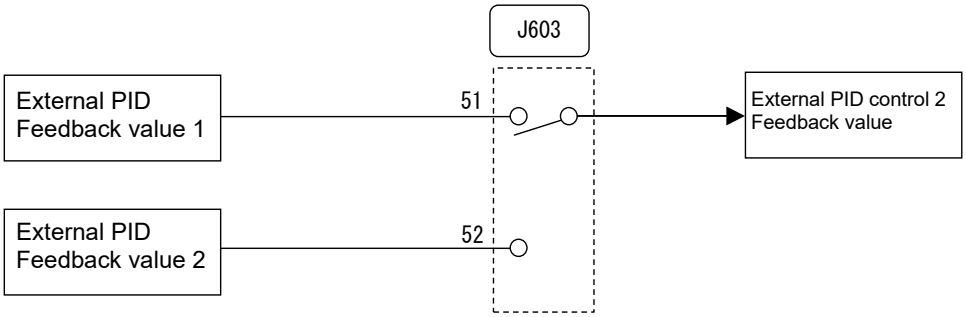

<External PID control 3 feedback selection area (J653) block diagram>

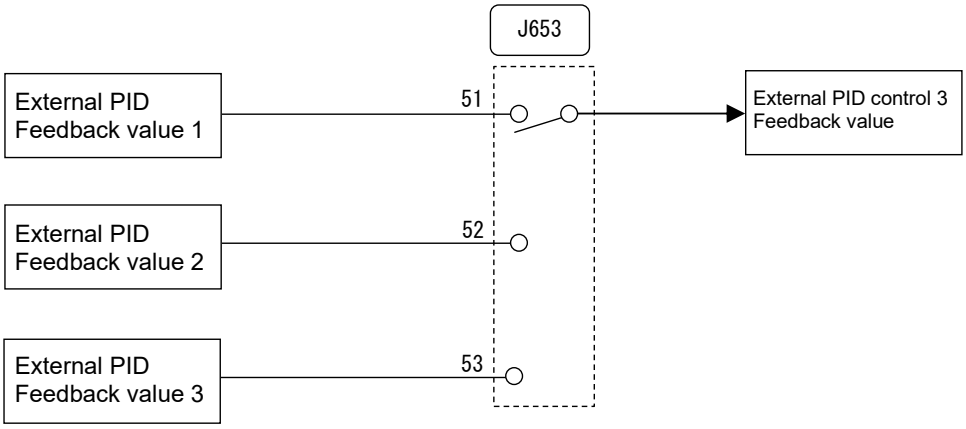

FUNCTION
F Codes
E Codes
C Codes
P Codes
H Codes
A Codes
b Codes
r Codes
J Codes
d Codes
U Codes
y Codes
K Codes

J504	External PID Control 1 (Deviation selection) *101

*101: Supported with ROM0500 or later.

This function code selects the external PID control 1 deviation value.

• Data setting range: 0, 51, 52

J504 data	Function
0	External PID control 1 command value (J502) - external PID control 1 feedback value (J503)
51	Maximum selection (the one with the larger deviation, external PID control 1 or 2, is used.)
52	Minimum selection (the one with the smaller deviation, external PID control 1 or 2, is used.)

<External PID control 1 deviation selection area block diagram>

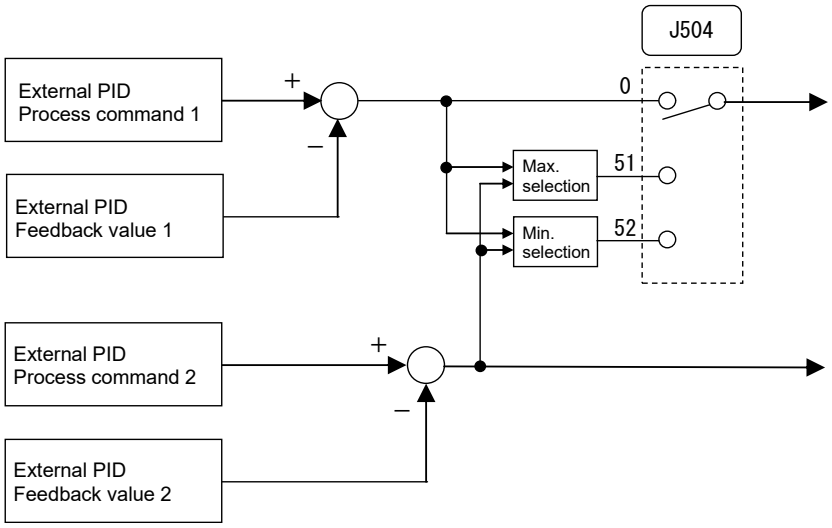

J505 J605 J655	External PID Control 1 (Display unit) *101 External PID Control 2 (Display unit) *101 External PID Control 3 (Display unit) *101

*101: Supported with ROM0500 or later.

These function codes select the external PID control display unit. Function code J505 sets external PID control 1, J605 sets external PID control 2, and J655 sets external PID control 3. When using external PID control, data such as external PID command values (SV), feedback values (PV), and control input (MV) can be monitored at the touch panel. These function codes are used to set the respective data display units.

• The data setting range is the same as that for function codes J105 and J205. Refer to J105 and J205 for details.

Note If performing external PID control with the same unit, and at the same scale as feedback values, there is no need to change the display unit (J505, J605, J655) setting.
Set if wishing to perform external PID control for feedback values with another unit or scale.

The unit and scale for feedback values are set with the following function codes.

	Display unit	Maximum scale	Minimum scale
Terminal [12]	C58	C59	C60
Terminal [C1] (C1 function)	C64	C65	C66
Terminal [V2]	C70	C71	C72
Terminal [C1] (V3 function)	C84	C85	C86

J506,J507	**External PID Control 1 (Maximum scale, Minimum scale)**	***101**
J606,J607	**External PID Control 2 (Maximum scale, Minimum scale)**	***101**
J656,J657	**External PID Control 3 (Maximum scale, Minimum scale)**	***101**

*101: Supported with ROM0500 or later.

External PID control values can be converted to a physical quantity that is easy to recognize and displayed accordingly. Function code J506 and J507 set external PID control 1, J606 and J607 set external PID control 2, and J656 and J657 set external PID control 3.

J506, J606, and J656 set the maximum scale “display at 100% of the external PID command/external PID feedback value”, and J507, J607, and J657 set the “display at 0% of the external PID command/external PID feedback value”.

The displayed value is determined as follows:

Display value = (external PID control value (%))/100 x (Max. scale－ Min. scale) + Min. scale

• Data setting range: (Max. scale and min. scale) -999 to 0.00 to 9990

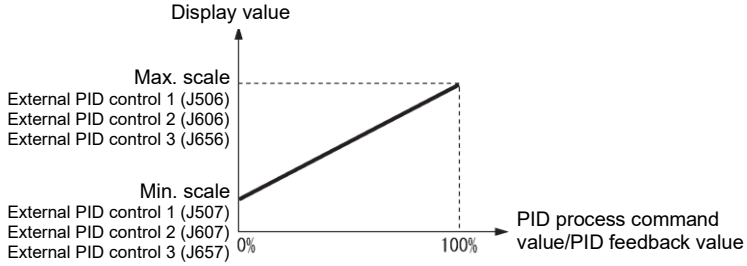

Note

If performing PID control with the same unit, and at the same scale as feedback values, there is no need to change the maximum scale (J506, J606, J656) or minimum scale (J507, J607, J657) settings.
Set if wishing to perform external PID control for feedback values with another unit or scale.

FUNCTION
F Codes
E Codes
C Codes
P Codes
H Codes
A Codes
b Codes
r Codes
J Codes
d Codes
U Codes
y Codes
K Codes

J510, J610, J660 **J511, J611, J661** **J512, J612, J662** **J513, J613, J663**	**External PID Control 1, 2, 3**	**P (Gain)**	***101**
	External PID Control 1, 2, 3	**I (Integral time)**	***101**
	External PID Control 1, 2, 3	**D (Differential time)**	***101**
	External PID Control 1, 2, 3	**Feedback filter**	***101**
	Related function code: J515	**External PID Control 1 (ON/OFF control hysteresis width)**	
	Related function code:J615	**External PID Control 2 (ON/OFF control hysteresis width)**	
	Related function code:665	**External PID Control 3 (ON/OFF control hysteresis width)**	

*101: Supported with ROM0500 or later.

• Function codes for P(Gain), I(Integral), D(Differential time), feedback filter by control

	P (Gain)	I (Integral time)	D (Differential time)	Feedback filter
External PID control 1	J510	J511	J512	J513
External PID control 2	J610	J611	J612	J613
External PID control 3	J660	J661	J662	J663
Reference function codes	J03	J04	J05	J06

The respective setting items are the same as those of the reference function codes.
Refer to the detailed description of items J03, J04, J05, and J06.

■ P gain (external PID control 1: J510, external PID control 2: J610, external PID control 3: J660)

These function codes specify the gain for the external PID controller.

• Data setting range: 0.000 to 30.000 times, 999 (ON/OFF): ON/OFF control

P (Proportional) action (0.000 to 30.000 times)

An action in which the MV (manipulated value: output frequency) is proportional to the deviation is called P action, which outputs the MV in proportion to deviation. However, P action alone cannot eliminate deviation.

Gain is data that determines the system response level against the deviation in P action. An increase in gain speeds up response, but an excessive gain may oscillate the inverter output. A decrease in gain delays response, but it stabilizes the inverter output.

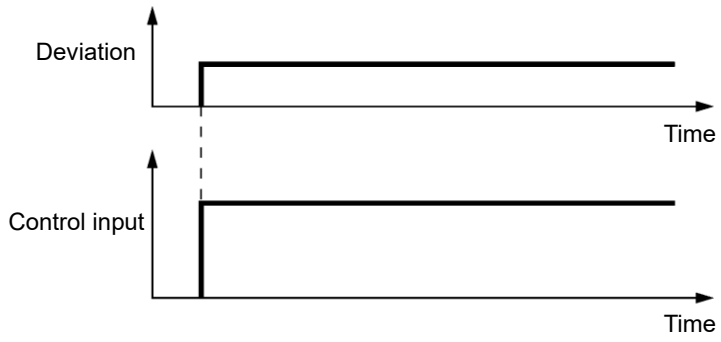

ON/OFF control

ON/OFF control is possible by setting the P gain function codes (J510, J610, J660) to OFF. If the feedback value (PV) exceeds the threshold (command value (SV) + hysteresis width (J515)), the control input (MV) changes in two values, 0% and 100%.

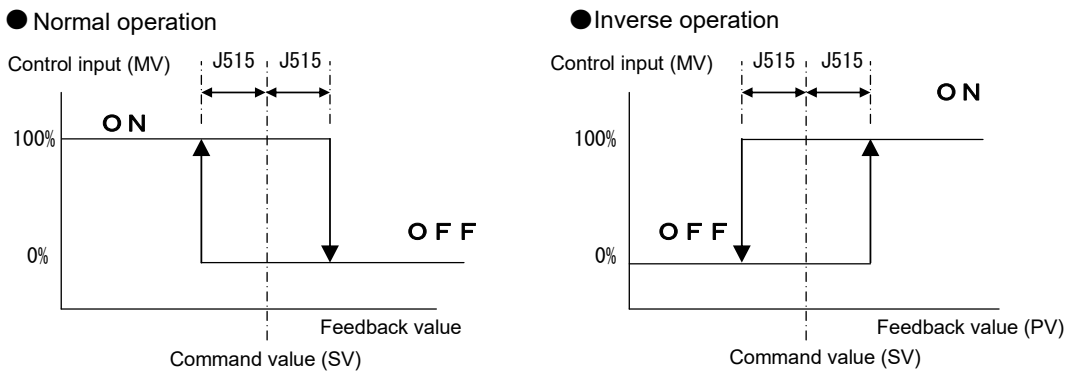

■ **I integral time (external PID control 1: J511, external PID control 2: J611, external PID control 3: J661)**

These function codes set the integral time for the external PID controller.

• Data setting range: 0.0 to 3600.0 s

0.0 indicates that the integral component is disabled.

FUNCTION
F Codes
E Codes
C Codes
P Codes
H Codes
A Codes
b Codes
r Codes
J Codes
d Codes
U Codes
y Codes
K Codes

I (Integral) action

An operation in which the change rate of the MV (manipulated value: output frequency) is proportional to the integral value of deviation is called I action, which outputs the MV that integrates the deviation. Therefore, I action is effective in bringing the feedback value close to the commanded value. For the system whose deviation rapidly changes, however, this action cannot make it respond quickly.

The effectiveness of I action is expressed by integral time as parameter, that is J04 data. The longer the integral time, the slower the response. The reaction to the external disturbance also becomes slow. The shorter the integral time, the faster the response. Setting too short integral time, however, makes the inverter output tend to oscillate against the external disturbance.

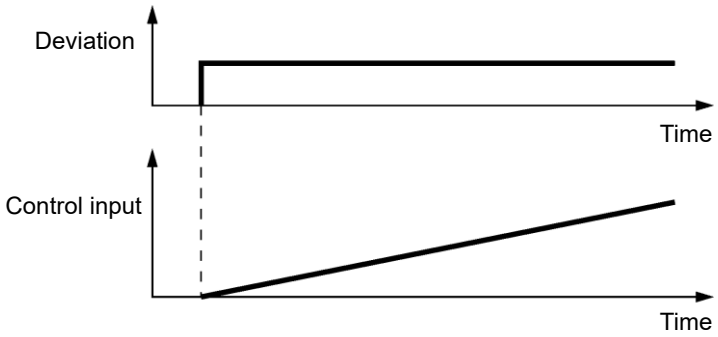

■ **D differential time(external PID control 1: J512, external PID control 2: J612, external PID control 3: J662)**

These function codes set the differential time for the external PID controller.

• Data setting range: 0.00 to 600.00 s

0.00 indicates that the differential component is disabled.

D (Differential) action

An operation in which the MV (manipulated value: output frequency) is proportional to the differential value of the deviation is called D action, which outputs the MV that differentiates the deviation. D action makes the inverter quickly respond to a rapid change of deviation.

The effectiveness of D action is expressed by differential time as parameter, that is J05 data. Setting a long differential time will quickly suppress oscillation caused by P action when a deviation occurs. Too long differential time makes the inverter output oscillation more. Setting short differential time will weakens the suppression effect when the deviation occurs.

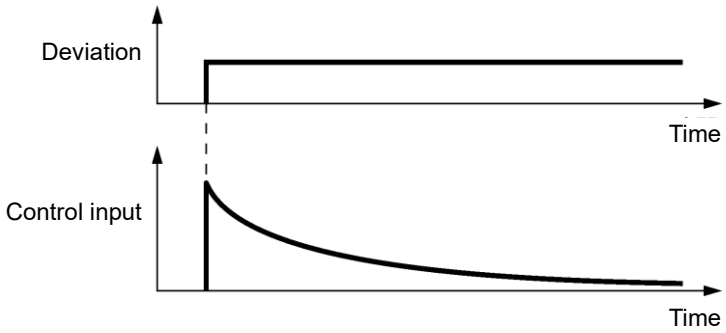

The combined uses of P, I, and D actions are described below.

(1) PI control

PI control, which is a combination of P and I actions, is generally used to minimize the remaining deviation caused by P action. PI control always acts to minimize the deviation even if a commanded value changes or external disturbance steadily occurs. However, the longer the integral time of I action, the slower the system response to quick-change control. P action can be used alone for loads with very large part of integral components.

(2) PD control

In PD control, the moment that a deviation occurs, the control rapidly generates greater MV (manipulated value: output frequency) than that generated by D action alone, to suppress the deviation increase. When the deviation becomes small, the behavior of P action becomes small. A load including the integral component in the controlled system may oscillate due to the action of the integral component if P action alone is applied. In such a case, use PD control to reduce the oscillation caused by P action, for keeping the system stable. That is, PD control is applied to a system that does not contain any damping actions in its process.

(3) PID control

PID control is implemented by combining P action with the deviation suppression of I action and the oscillation suppression of D action. PID control features minimal control deviation, high precision and high stability. In particular, PID control is effective to a system that has a long response time to the occurrence of deviation.

The method used to perform data adjustments in for external PID control is shown below.

It is highly recommended that external PID control be adjusted while monitoring the system response waveform of the external PID feedback with an oscilloscope or equivalent. Repeat the following procedure to determine the optimal solution for each system.

- Increase the external PID control (gain) function code J510, J610, and J660 data in the range where the feedback signal does not oscillate.
- Decrease the external PID control (integral time) function code J511, J611, and J661 data in the range where the feedback signal does not oscillate.
- Increase the external PID control (differential time) function code J512, J612, and J662 data in the range where the feedback signal does not oscillate.

FUNCTION
F Codes
E Codes
C Codes
P Codes
H Codes
A Codes
b Codes
r Codes
J Codes
d Codes
U Codes
y Codes
K Codes

The method for refining the system response from the waveforms is shown below.

1) Suppressing overshoot

Increase the integral time function code J511, J611, and J661 data, and decrease the differential time function code J512, J612, and J662 data.

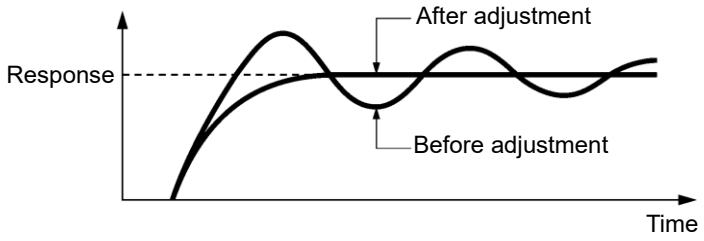

2) Quick stabilization (Moderate overshoot permissible)

Decrease the gain function code J510, J610, and J660 data, and increase the differential time function code J512, J612, and J662 data.

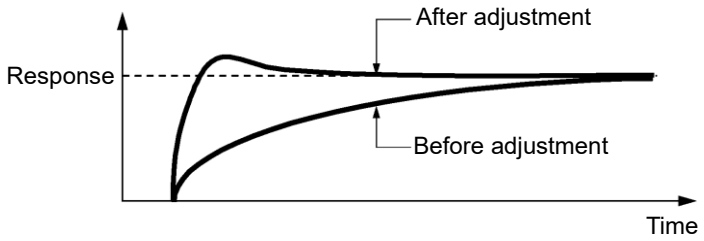

3) Suppressing oscillation for cycles longer than the integral time set in the function code J511, J611, and J661 data

Increase the integral time function code J511, J611, and J661 data.

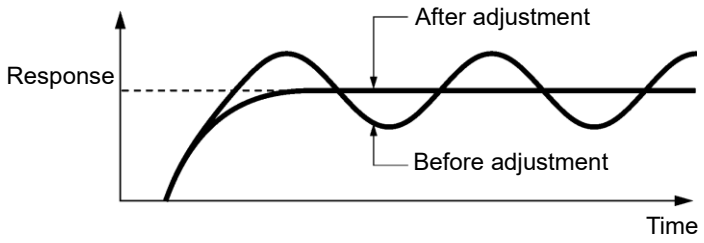

4) Suppressing oscillation for cycles roughly the same as the differential time set in the function code J512, J612, and J662 data

Decrease the differential time function code J512, J612, and J662 data.

Decrease the gain function code J510, J610, and J660 data if unable to suppress oscillation even when the differential time is set to “0” seconds.

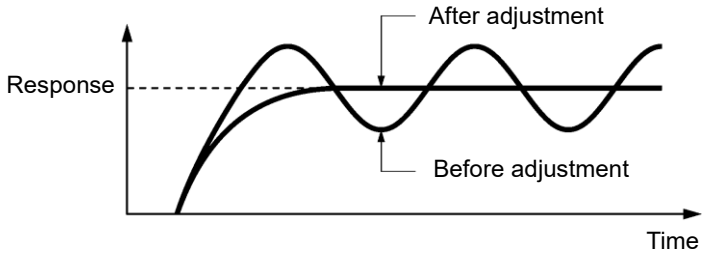

■ Feedback filter (external PID control 1: J513, external PID control 2: J613, external PID control 3: J663)

These function codes specify the time constant of the filter for feedback values under external PID control.

• Data setting range: 0.0 to 900.0 s

• This setting is used to stabilize PID control. Setting too long a time constant makes the system response slow.

J514,	**External PID Control 1 (Anti-reset wind-up)**	***101**
J614,	**External PID Control 2 (Anti-reset wind-up)**	***101**
J664	**External PID Control 3 (Anti-reset wind-up)**	***101**

*101: Supported with ROM0500 or later.

This has the same function as function code J10. Refer to the detailed description of item J10.

J515,	**External PID Control 1 (ON/OFF control hysteresis width)**	***101**
J615,	**External PID Control 2 (ON/OFF control hysteresis width)**	***101**
J665	**External PID Control 3 (ON/OFF control hysteresis width)**	***101**

*101: Supported with ROM0500 or later.

ON/OFF control is possible by setting the P gain function codes (J510, J610, J660) to OFF. If the feedback value (PV) exceeds the threshold (command value (SV) + hysteresis width), the control input (MV) changes in two values, 0% and 100%. The hysteresis width at this time can be set with a physical quantity. Function code J515 sets external PID control 1, J615 sets external PID control 2, and J665 sets external PID control 3.

• Data setting range: 0.00 to 9990 (The setting range is limited by the maximum and minimum scale.)

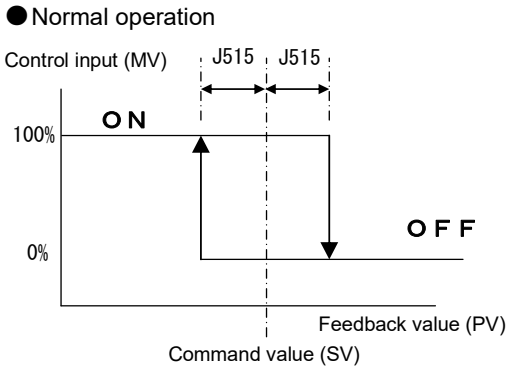

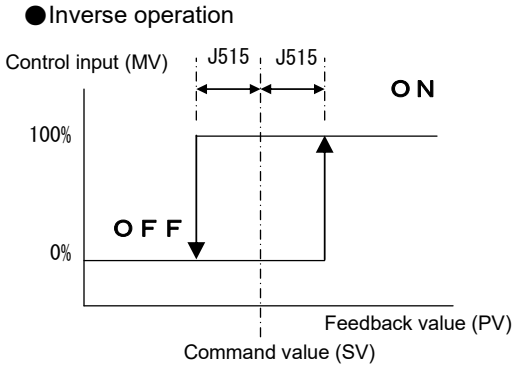

FUNCTION
F Codes
E Codes
C Codes
P Codes
H Codes
A Codes
b Codes
r Codes
J Codes
d Codes
U Codes
y Codes
K Codes

J516,	**External PID Control 1 (Proportional operation output convergent value)**	***101**
J616,	**External PID Control 2 (Proportional operation output convergent value)**	***101**
J666	**External PID Control 3 (Proportional operation output convergent value)**	***101**

*101: Supported with ROM0500 or later.

This setting value can be added to the external PID output exclusively for external PID control. Function code J516 sets external PID control 1, J616 sets external PID control 2, and J666 sets external PID control 3.

• Data setting range: 0 to 150%

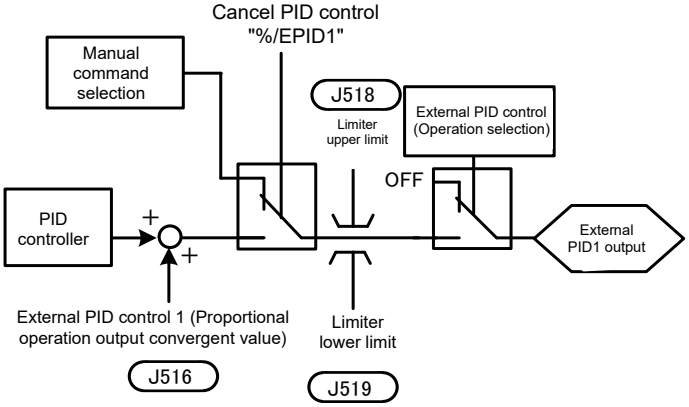

Furthermore, the following proportional operation is possible by disabling I (Integral time) and D (Differential time), and setting for P (Gain) and this value only.

●Normal operation

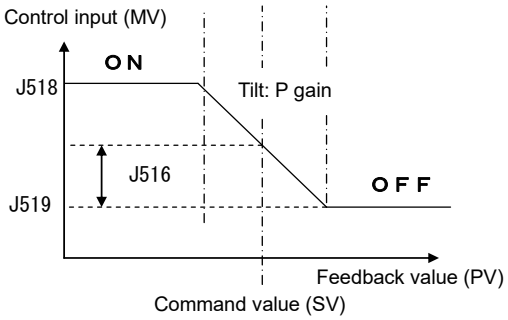

●Inverse operation

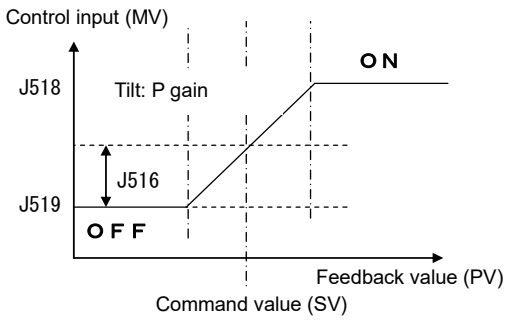

J517,	**External PID Control 1 (Proportional cycle)**	***101**
J617,	**External PID Control 2 (Proportional cycle)**	***101**
J667	**External PID Control 3 (Proportional cycle)**	***101**

*101: Supported with ROM0500 or later.

These function codes set the output cycle (Tc) when outputting digital signals (ON/OFF) for external PID control 1 to 3. Function code J517 sets external PID control 1, J617 sets external PID control 2, and J667 sets external PID control 3.

• Data setting range: 1 to 150 s

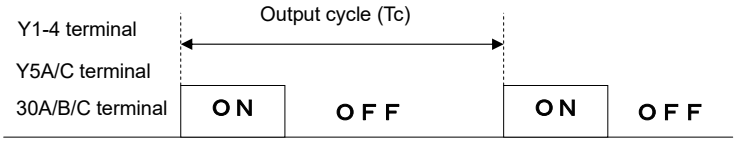

The ON and OFF time are as follows.

• ON time: Output cycle (Tc) x control input (MV)/100

• OFF time: Output cycle (Tc) - ON time

Example: Output cycle (Tc) = 60 s, control input (MV) = 35%

ON time: 60 s x 35%/100 = 21 s

OFF time: 60 s - 21 s = 39 s

It is necessary to set digital output signals “EPID1-OUT”, “EPID2-OUT”, and “EPID3-OUT” for function codes E20 to E24, and E27.

• External PID control 1: “EPID1-OUT” (E20 to E24, E27: data = 212)
• External PID control 2: “EPID2-OUT” (E20 to E24, E27: data = 222)
• External PID control 3: “EPID3-OUT” (E20 to E24, E27: data = 232)

FUNCTION
F Codes
E Codes
C Codes
P Codes
H Codes
A Codes
b Codes
r Codes
J Codes
d Codes
U Codes
y Codes
K Codes

J518, J618, J668	**External PID Control 1, 2, 3 (Upper limit of PID process output)**	***101**
J519, J619, J669	**External PID Control 1, 2, 3 (Lower limit of PID process output)**	***101**
J520, J620, J670	**External PID Control 1, 2, 3 (Upper and lower limits)**	***101**

*101: Supported with ROM0500 or later.

The upper and lower limiters can be set for external PID output exclusively for external PID control. Function codes J518, J519, and J520 set PID control 1, codes J618, J619, and J620 set external PID control 2, and codes J668, J669, and J670 set external PID control 3. The upper and lower limiters are also valid when operation is performed by inputting external PID cancel ("%/EPID1", "%/EPID2", "%/EPID3"), and using manual commands.

(📖Function code E01 to E09 data = 202 ("%/EPID1"), 212 ("%/EPID2"), 222 ("%/EPID3"))

■ External PID Control 1 to 3 (Upper limit of PID process output) (J518, J618, J668)

• Data setting range: -10 to 110%

J518, J618, and J668 set the external PID controller output limiter upper limit value in % units.

■ External PID Control 1 to 3 (Lower limit of PID process output) (J519, J619, J669)

• Data setting range: -10 to 110%

J519, J619, and J669 set the external PID controller output limiter lower limit value in % units.

■ External PID Control 1 to 3 (Upper and lower limits) (J520, J620, J670)

・Data setting range: 0, 1

The upper and lower limits for the external PID controller output limiter lower can be selected.

J520, J620, J670 data	PID control	PID output limit	
		Upper limit	Lower limit
0	External PID control 1	J518	J519
	External PID control 2	J618	J619
	External PID control 3	J668	J669
1	External PID control 1	J518 or higher → 110%	Less than J519 → -10%
	External PID control 2	J618 or higher → 110%	Less than J619 → -10%
	External PID control 3	J668 or higher → 110%	Less than J669 → -10%

J521, J621, J671	**External PID Control 1, 2, 3 (Alarm output selection)**	***101**
J522, J622, J672	**External PID Control 1, 2, 3 (Upper level alarm (AH))**	***101**
J524, J624, J674	**External PID Control 1, 2, 3 (Lower level alarm (AL))**	***101**

*101: Supported with ROM0500 or later.

The inverter is capable of outputting absolute value warnings or deviation warnings for external PID control. Function codes J521, J522, and J524 set PID control 1, codes J621, J622, and J624 set external PID control 2, and codes J671, J672, and J674 set external PID control 3.

Digital output signals “EPV1-ALM”, “EPV2-ALM”, and “EPV3-ALM” can be set with E20 to E24, and E27 as warning outputs. To trigger a light alarm, it is necessary to set the 10th bit of light alarm selection 3 (H83), but the following digital output signals can be extracted even if light alarm selection 3 (H83) is not set. Refer to the detailed description of items H81 to H83 for details on light alarm settings.

- External PID control 1: “EPV1-ALM” (E20 to E24, E27: data = 214)
- External PID control 2: “EPV2-ALM” (E20 to E24, E27: data = 224)
- External PID control 3: “EPV3-ALM” (E20 to E24, E27: data = 234)

J521 (J621, J671) sets the warning type J522 (J622, J672) and J524 (J624, J674) to the respective warning upper limit and lower limit.

■ External PID Control 1 to 3 (Alarm output selection) (J521, J621, J671)

J11 sets the warning type. The following warnings can be selected.

J521, J621, J671 data	Type	Details (example: in case of external PID command 1)
0	Absolute value warning (PV)	“EPV1-ALM” turns ON when PV < Al or AH < PV. 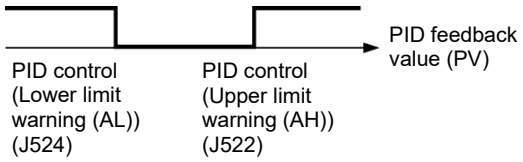
1	Warning caused by process command value with hold	Same as above (with Hold)
2	Warning caused by process command value with latch	Same as above (with Latch)
3	Warning caused by process command value with hold and latch	Same as above (with Hold and Latch)
4	Deviation warning (PV)	“EPV1-ALM” is ON when PV < SV - AL or SV + AH < PV. 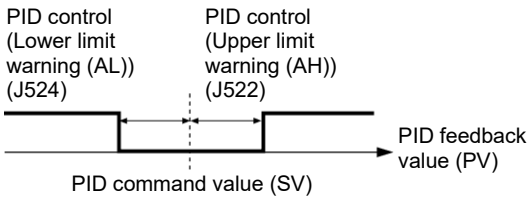

FUNCTION
F Codes
E Codes
C Codes
P Codes
H Codes
A Codes
b Codes
r Codes
J Codes
d Codes
U Codes
y Codes
K Codes

J521, J621, J671 data	Type	Details (example: in case of external PID command 1)
5	Warning caused by PID error value with hold	Same as above (with Hold)
6	Warning caused by PID error value with latch	Same as above (with Latch)
7	Warning caused by PID error value with hold and latch	Same as above (with Hold and Latch)
8	Absolute value warning (SV)	"EPV1-ALM" turns ON when SV < Al or AH < SV. 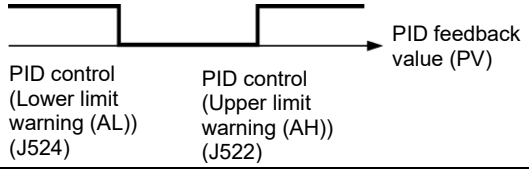
9	Absolute value warning (SV) (with hold)	Same as above (with Hold)
10	Absolute value warning (SV) (with latch)	Same as above (with Latch)
11	Absolute value warning (SV) (with hold, latch)	Same as above (with Hold and Latch)
12	Absolute value warning (MV)	"EPV1-ALM" turns ON when MV < Al or AH < MV. 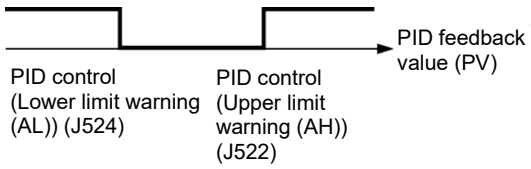
13	Absolute value warning (MV) (with hold)	Same as above (with Hold)
14	Absolute value warning (MV) (with latch)	Same as above (with Latch)
15	Absolute value warning (MV) (with hold, latch)	Same as above (with Hold and Latch)

* SV: Process command value, PV: Feedback valuem, MV: Cotrol unit

Hold: During the power-on sequence, the alarm output is kept OFF (disabled) even when the monitored quantity is within the alarm range. Once it goes out of the alarm range, and comes into the alarm range again, the alarm is enabled.

Latch: Once the monitored quantity comes into the alarm range and the alarm is turned ON, the alarm will remain ON even if it goes out of the alarm range. To release the latch, perform a reset by pressing the PRG RESET key on keypad, or by turning terminal block "RST" ON. Resetting can be done by the same way as resetting an alarm.

J527, J627, J677	**External PID Control 1, 2, 3 (Feedback error detection mode)**	***101**
J529, J629, J679	**External PID Control 1, 2, 3 (Feedback error upper-limit)**	***101**
J530, J630, J680	**External PID Control 1, 2, 3 (Feedback error lower-limit)**	***101**
J531, J631, J681	**External PID Control 1, 2, 3 (Feedback error detection time)**	***101**

*101: Supported with ROM0500 or later.

External PID control feedback value (PV value) errors can be detected. In the case of external PID control 1, errors are detected when the PV signal error level (upper limit: J529, lower limit: J530) continues for the set time (J531).

If an error is detected, the motor is stopped or continues to run in accordance with the mode selection (J527).

The function code settings that can be set for external PID control 1 to 3 are as follows.

	Error detection Mode selection	Error upper limit	Error lower limit	Error detection time
External PID control 1	J527	J529	J530	J531
External PID control 2	J627	J629	J630	J631
External PID control 3	J677	J679	J680	J681

■ External PID Control 1 to 3 (Feedback error detection mode) (J527, J627, J677)

Selects the operation performed after an error is detected.

• Data setting range: 0 to 2

J527, J627, J677 data	Operation details
0	Disable: Output signal is turned ON and motor continues to run Output signal: External PID control 1 “EPV1-OFF” External PID control 2 “EPV2-OFF” External PID control 3 “EPV3-OFF”
1	Enable: Coast-to-stop (PVA trip)
2	Enable: Deceleration stop (PVA trip) * PVA trip after deceleration stop

External PID1 feedback error “EPV1-OFF”, “EPV2-OFF”, and “EPV3-OFF” operations can be monitored externally with terminals [Y1] to [Y4], [Y5A/C] or [30A/B/C]. Set the following data for function codes E20 to E24 or E27.

• External PID control 1: “EPV1-OFF” (E20 to E24, E27: data = 215)
• External PID control 2: “EPV2-OFF” (E20 to E24, E27: data = 225)
• External PID control 3: “EPV3-OFF” (E20 to E24, E27: data = 235)

FUNCTION
F Codes
E Codes
C Codes
P Codes
H Codes
A Codes
b Codes
r Codes
J Codes
d Codes
U Codes
y Codes
K Codes

■ External PID control 1 to 3 (Feedback error upper-limit)) (J529, J629, J679)

The error upper limit value is set with a physical quantity.

• Data setting range: -999 to 0.00 to 9990, AUTO = 105% or equivalent

The physical quantity that can be set is based on the following function code display units, and minimum/maximum scales.

	Display unit	Maximum scale	Minimum scale
External PID control 1	J505	J506	J507
External PID control 2	J605	J606	J607
External PID control 3	J655	J656	J657

■ External PID control 1 to 3 (Feedback error lower-limit) (J530, J630, J680)

J130 and J230 set the error lower limit value with a physical quantity. The physical quantity that can be set is based on the display unit and minimum/maximum scales. (Refer to error upper limit J529 for details on display unit and minimum/maximum scale settings.)

• Data setting range: -999 to 0.00 to 9990, AUTO = -5% or equivalent

■ External PID control 1 to 3 (Feedback error detection time) (J531, J631, J681)

XX sets the error level (upper limit: J529, J629, J679 lower limit: J530, J630, J680) duration. An error is judged after the duration has elapsed.

• Data setting range: 0.0 to 300.0 s

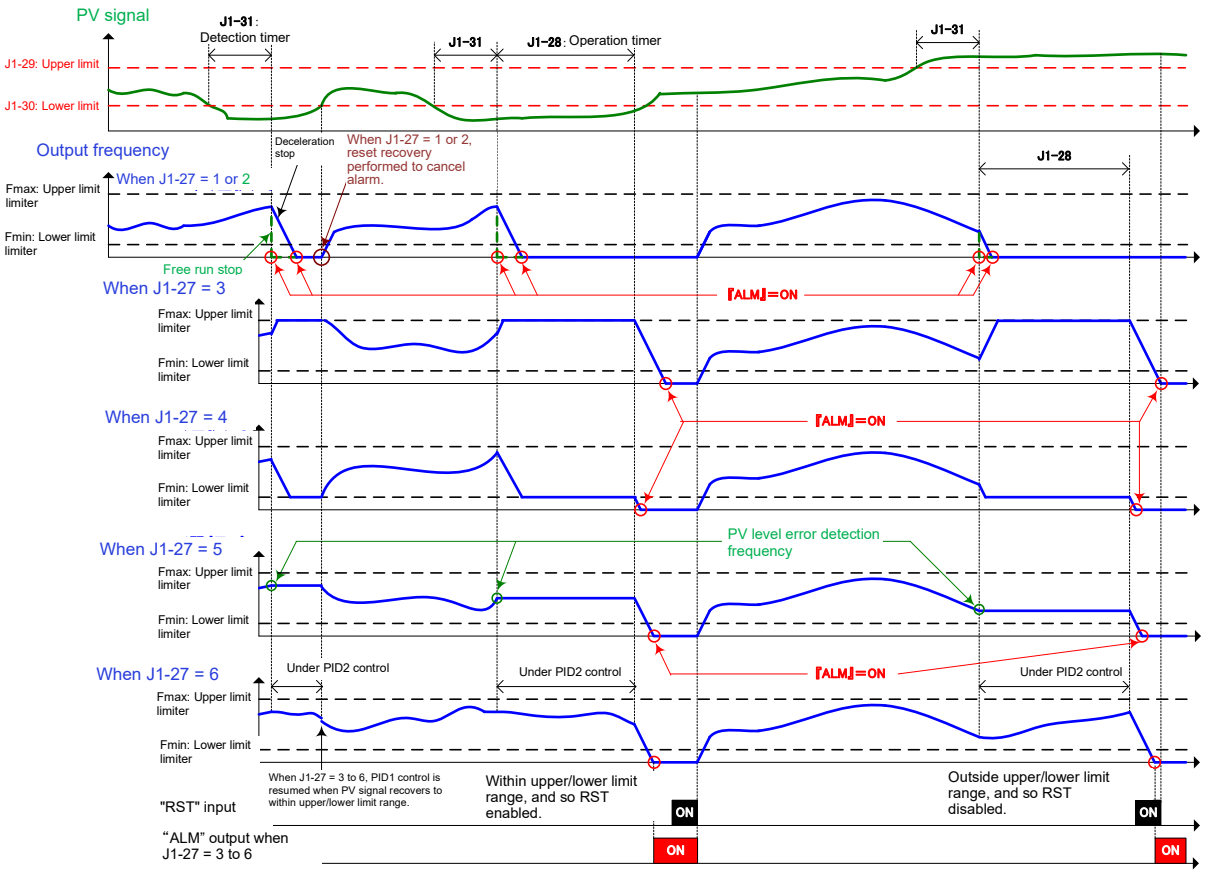

J540, J640, J690	External PID Control 1, 2, 3 (Manual command) *101

*101: Supported with ROM0500 or later.

■ External PID Control 1 to 3 (Manual command) (J540, J640, J690)

XX sets the command value (manual) when canceling external PID control.

• Data setting range: 0, 8, 51, 52, 53, 111, 112

Data	J540	J640	J690	Function
0	Y	Y	Y	External PID command with keypad External PID command with keypad ▲/▼ key
8	Y	Y	Y	External PID command with keypad (with balanceless/bumpless function) External PID command with keypad ▲/▼ key
51	Y	Y	Y	External PID 1 command (analog input terminal [12], [C1] (C1 function), [V2], [C1] (V3 function)) * Function code E61 to E63 (terminal [12], [C1] (C1 function), [V2], [C1] (V3 function) extension function selection): data = 43
52	N	Y	Y	External PID 2 command (analog input terminal [12], [C1] (C1 function), [V2], [C1] (V3 function)) * Function code E61 to E63 (terminal [12], [C1] (C1 function), [V2], [C1] (V3 function) extension function selection): data = 46
53	N	N	Y	External PID 3 command (analog input terminal [12], [C1] (C1 function), [V2], [C1] (V3 function)) * Function code E61 to E63 (terminal [12], [C1] (C1 function), [V2], [C1] (V3 function) extension function selection): data = 49
111	N	Y	Y	External PID control 1 manual command value Use the manual command values (data: 0, 8, 51) set at function code J540.
112	N	N	Y	External PID control 2 manual command value Use the manual command values (data: 0, 8, 51, 52, 111) set at function code J640.

Y: Enabled, N: Disabled

📖 External PID cancel is set by setting function codes E01 to E09 data to “202” (“%/EPID1”), 212 (“%/EPID2”), or 222 (“%/EPID3”).

FUNCTION
F Codes
E Codes
C Codes
P Codes
H Codes
A Codes
b Codes
r Codes
J Codes
d Codes
U Codes
y Codes
K Codes

J550	**External PID Multistep Command (Mode selection)**	***101**
J551	**External PID Multistep Command (Multistep command 1)**	***101**
J552	**External PID Multistep Command (Multistep command 2)**	***101**
J553	**External PID Multistep Command (Multistep command 3)**	***101**

*101: Supported with ROM0500 or later.

External PID control commands can be set as preset values (4 steps).

■ External pid multistep command (mode selection) (J550)

J550 selects external PID control for which external PID multistep commands are enabled.

• Data setting range: 0 bits, 1 bit, 2 bits

J550 data	Function
0 - 2 bits = 0	Multistep commands disabled
0 bits = 1	Multistep commands enabled with external PID control 1
1 bit = 1	Multistep commands enabled with external PID control 2
2 bits = 1	Multistep commands enabled with external PID control 3

■ External PID multistep command (Multistep command 1 to 3) (J551, J552, J553)

J551, J552, and J553 set multistep commands with a physical quantity.

• Data setting range: -999 to 0.00 to 9990

External PID control commands

"EPID-SS2"	"EPID-SS1"	Selected command
OFF	OFF	Command with J550
OFF	ON	J551 (Multistep 1)
ON	OFF	J552 (Multistep 2)
ON	ON	J553 (Multistep 3)

The physical quantity that can be set is based on the following function code display units, and minimum/maximum scales.

	Display unit	Maximum scale	Minimum scale
External PID control 1	J505	J506	J507
External PID control 2	J605	J606	J607
External PID control 3	J655	J656	J657

5.3.14 J6 codes (Applied functions)

*101: Supported with ROM0500 or later.

J601	External PID Control 2 (Mode selection) (Refer to J501.)*101

External PID control 2 (Mode selection) settings are described in detail at function code J501.

J602	External PID Control 2 (Remote command selection) (Refer to J502.)*101

External PID control 2 **(Remote command selection)** settings are described in detail at function code J502.

J603	External PID Control 2 (Feedback selection) (Refer to J503.)*101

External PID control 2 (Feedback selection) settings are described in detail at function code J503.

J605	External PID Control 2 (Display unit) (Refer to J505.)*101

External PID control 2 (Display unit) settings are described in detail at function code J505.

J606, J607	External PID Control 2 (Maximum scale, Minimum scale) (Refer to J506, J507.)*101

External PID control 2 (Maximum scale, Minimum scale) settings are described in detail at function codes J506 and J507.

J610	External PID Control 2 P (Gain) (Refer to J510.) *101
J611	I (Integral time) (Refer to J511.)*101
J612	D (Differential time) (Refer to J512.)*101
J613	Feedback filter (Refer to J513.)*101

External PID control 2 P (Gain), I (Integral time), D (Differential time), and feedback filter settings are described in detail at function codes J510, J511, J512, and J513.

J614	External PID Control 2 (Anti-reset wind-up) (Refer to J514.)*101

External PID control 2 (Anti-reset wind-up) settings are described in detail at function code J514.

J615	External PID Control 2 (ON/OFF control hysteresis width) (Refer to J515.)*101

External PID control 2 (ON/OFF control hysteresis width) settings are described in detail at function code J515.

J616	External PID Control 2 (Proportional operation output convergent value) (Refer to J516.)*101

External PID control 2 (Proportional operation output convergent value) settings are described in detail at function code J516.

J617	External PID Control 2 (Proportion cycle) (Refer to J517.)*101

External PID control 2 (Proportional cycle) settings are described in detail at function code J517.

J618	**External PID Control 2 (Upper limit of PID process output)**	**(Refer to J518.)*101**
J619	**(Lower limit of PID process output)**	**(Refer to J519.)*101**
J620	**(Upper and lower limits)**	**(Refer to J520.)*101**

External PID control 2 (Upper limit of PID process output), (Lower limit of PID process output), and (Upper and lower limits) settings are described in detail at function codes J518, J519, and J520.

J621	**External PID Control 2 (Alarm output selection)**	**(Refer to J521.)*101**
J622	**(Upper level alarm (AH))**	**(Refer to J522.) *101**
J624	**(Lower level alarm (AL))**	**(Refer to J524.)*101**

External PID control 2 (Alarm output selection), (Upper level alarm (AH)), and (Lower level alarm (AL)) settings are described in detail at function codes J521, J522, and J524.

J627	**External PID Control 2 (Feedback error detection mode)**	**(Refer to J527.)*101**
J629	**(Feedback error upper-limit)**	**(Refer to J529.)*101**
J630	**(Feedback error lower-limit)**	**(Refer to J530.)*101**
J631	**(Feedback error detection time)**	**(Refer to J531.)*101**

External PID control 2 (Feedback error detection mode), (Feedback error continuation duration), (Feedback error upper-limit), (Feedback error lower-limit), and (Feedback error detection time) settings are described in detail at function codes J527 to J531.

J640	**External PID Control 2 (Manual command)**	**(Refer to J540.)*101**

External PID control 2 (Manual command) settings are described in detail at function code J540.

J651	**External PID Control 3 (Mode selection)**	**(Refer to J501.)*101**

External PID control 3 (Mode selection) settings are described in detail at function code J501.

J652	**External PID Control 3 (Remote command selection)**	**(Refer to J502.)*101**

External PID control 3 (Remote command selection) settings are described in detail at function code J502.

J653	**External PID Control 3 (Feedback selection)**	**(Refer to J503.)*101**

External PID control 3 (Feedback selection) settings are described in detail at function code J503.

J655	**External PID Control 3 (Display unit)**	**(Refer to J505.)*101**

External PID control 3 (Display unit) settings are described in detail at function code J505.

J656, J657	**External PID Control 3 (Maximum scale, Minimum scale)**	**(Refer to J506, J507.)*101**

External PID control 3 (Maximum scale, Minimum scale) settings are described in detail at function codes J506 and J507.

J660	**External PID Control 3 P (Gain)**	**(Refer to J510.)*101**
J661	**I (Integral time)**	**(Refer to J511.)*101**
J662	**D (Differential time)**	**(Refer to J512.)*101**
J663	**Feedback filter**	**(Refer to J513.)*101**

External PID control 3 P (Gain), I (Integral time), D (Differential time), and feedback filter settings are described in detail at function codes J510, J511, J512, and J513.

J664	**External PID Control 3 (Anti-reset wind-up)**	**(Refer to J514.)*101**

External PID control 3 (Anti-reset wind-up) settings are described in detail at function code J514.

J665	**External PID Control 3 (ON/OFF control hysteresis width)**	**(Refer to J515.)*101**

External PID control 2 (ON/OFF control hysteresis width) settings are described in detail at function code J515.

J666	**External PID Control 3 (Proportional operation output convergent value)**	**(Refer to J516.)*101**

External PID control 3 (Proportional operation output convergent value) settings are described in detail at function code J516.

J667	**External PID Control 3 (Proportion cycle)**	**(Refer to J517.)*101**

External PID control 3 (Proportion cycle) settings are described in detail at function code J517.

J668	**External PID Control 3 (Upper limit of PID process output)**	**(Refer to J518.)*101**
J669	**(Lower limit of PID process output)**	**(Refer to J519.)*101**
J670	**(Upper and lower limits)**	**(Refer to J520.)*101**

External PID control 3 (Upper limit of PID process output), ((Lower limit of PID process output), and (Upper and lower limits) settings are described in detail at function codes J518 to 520.

J671	**External PID Control 3 (Alarm output selection)**	**(Refer to J521.)*101**
J672	**(Upper level alarm (AH))**	**(Refer to J522.)*101**
J674	**(Lower level alarm (AL))**	**(Refer to J524.)*101**

External PID control 3 (Alarm output selection), (Upper level alarm (AH)), and (Lower level alarm (AL)) settings are described in detail at function codes J521, J522, and J524.

J677	**External PID Control 3 (Feedback error detection mode)**	**(Refer to J527.)*101**
J679	**(Feedback error upper-limit)**	**(Refer to J529.)*101**
J680	**(Feedback error lower-limit)**	**(Refer to J530.)*101**
J681	**(Feedback error detection time)**	**(Refer to J531.)*101**

External PID control 3 (Feedback error detection mode), (Feedback error continuation duration), (Feedback error upper-limit), (Feedback error lower-limit), and (Feedback error detection time) settings are described in detail at function codes J527 to J531.

J690	**External PID Control 3 (Manual command)**	**(Refer to J540.)*101**

External PID control 3 (Manual command) settings are described in detail at function code J540.

FUNCTION
F Codes
E Codes
C Codes
P Codes
H Codes
A Codes
b Codes
r Codes
J Codes
d Codes
U Codes
y Codes
K Codes

5.3.15 d codes (Applied functions 2)

[1] Speed control

d01, A43, b43, r43 **d02, A44, b44, r44** **d03, A45, b45, r45** **d04, A46, b46, r46** **d05, A47, b47, r47** **d06, A48, b48, r48**	**Speed control 1 to 4** **(Speed command filter)** **(Speed detection filter)** **(P gain)** **(I integral time)** **(FF gain)** **(Output filter)** **Reference function code: d25: ASR switching time**

These function codes are used to adjust speed control constants, allowing optimum speed control to be performed under V/f control with speed sensor, vector control with speed sensor, or sensorless vector control.

■ **Block diagram of the speed control algorithm**

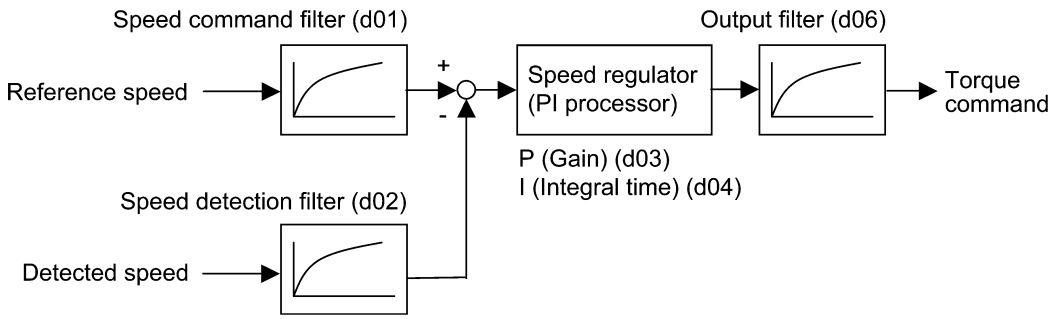

■ **Selected speed control parameter set**

In preparation for situations where it is necessary to change speed control constants due to changes in the load or machine conditions, FRENIC-MEGA is equipped with 4 sets of speed control constants, allowing changes to be made with digital input terminal functions “MPRM1” and “MPRM2”.

■ **Speed command filter (d01/A43/b43/r43)**

d01 specifies the time constant determining the first order delay of the speed command filter.

- Data setting range: 0.000 to 5.000 (s)

Modify this data when an excessive overshoot occurs against the change of the reference speed.

Increasing the filter time constant stabilizes the reference speed and reduces overshoot against the change of the reference speed, but it slows the response speed of the inverter.

■ **Speed detection filter (d02/A44/b44/r44)**

d02 specifies the time constant determining the first order delay of the speed detection filter.

- Data setting range: 0.000 to 0.100 (s)

Modify this data when the control target (machinery) is oscillatory due to deflection of a drive belt or other causes so that ripples (oscillatory components) are superimposed on the detected speed, causing hunting (undesirable oscillation of the system) and blocking the PI processor gain from increasing (resulting in a slow response speed of the inverter). In addition, if a low encoder (PG) resolution makes the system oscillatory, try to modify this data.

Increasing the time constant stabilizes the detected speed and allows to raise the PI processor gain even with ripples superimposed on the detected speed. However, speed detection itself is delayed, resulting in a slower speed response, larger overshoot, or hunting.

■ **P(Gain) (d03/A45/b45/r45), I(integral time) (d04/A46/b46/r46)**

d03 and d04 specify the gain and integral time of the speed regulator (ASR), respectively.

By setting d04 = 999, the speed regulator (ASR) configuration can be changed from a PI regulator to a P regulator, allowing the integral term to be disabled.

- Data setting range: (d03) 0.1 to 200.0 (times)
  (d04) 0.001 to 9.999 (s), 999 (Cancel integral term)

P (Gain)

Definition of “P gain = 1.0” is that the torque command is 100 % (100 % torque output of each inverter capacity) when the speed deviation (reference speed – detected speed) is 100 % (equivalent to the maximum speed). If the maximum output frequency (F03/A0/b01/r01) setting is changed, the P gain = 1.0 definition will change, and therefore the setting value should be reviewed.

Determine the P gain according to moment of inertia of machinery loaded to the motor output shaft. Larger moment of inertia needs larger P gain to keep the flat response during whole operation.

Specifying a larger P gain improves the quickness of control response, but may cause a motor speed overshooting or hunting (undesirable oscillation of the system). Moreover, mechanical resonance or vibration sound on the machine or motor could occur due to excessively amplified noise. If it happens, decreasing P gain will reduce the amplitude of the resonance/vibration. A too small P gain results in a slow inverter response and a speed fluctuation in low frequency, which may prolong the time required for stabilizing the motor speed.

I (Integral time)

Specifying a shorter integral time shortens the time needed to compensate the speed deviation, resulting in quick response in speed. Specify a short integral time if quick arrival to the target speed is necessary and a slight overshooting in the control is allowed; specify a long time if any overshooting is not allowed and taking longer time is allowed.

If a mechanical resonance occurs and the sound from the motor or gears is abnormal, setting a longer integral time can transfer the resonance point to the low frequency zone and suppress the resonance in the high frequency zone.

■ FF gain (d05/A47/b47/r47)

The inverter operates the feed forward (FF) control that adds the acceleration torque calculated from the variation of speed command to torque command directly.

The PI control of ASR is feed back control and it makes the compensation operation against the result (actual speed detection value). Therefore it can control against the disturbance or the uncertain characteristic of controlled object also. However it becomes a follow-up control even if the variation of speed command is already-known. The feed forward control can calculate the torque command related to the already-known variation of speed command. This is the function code that can make the feed forward control. Feed forward (FF) control is used to add the torque determined from the speed command change to the direct torque command.

Setting range: 0.00 to 99.99 (s)

This is valid if the load inertia is known beforehand. Conceptually, as it is shown in the following figure, the follow-up speed behavior against the actual speed command is clearly different between feed forward control valid and invalid. However, to get the maximum effect, it is necessary to adjust this function code setting and the PI control settings value of the ASR.

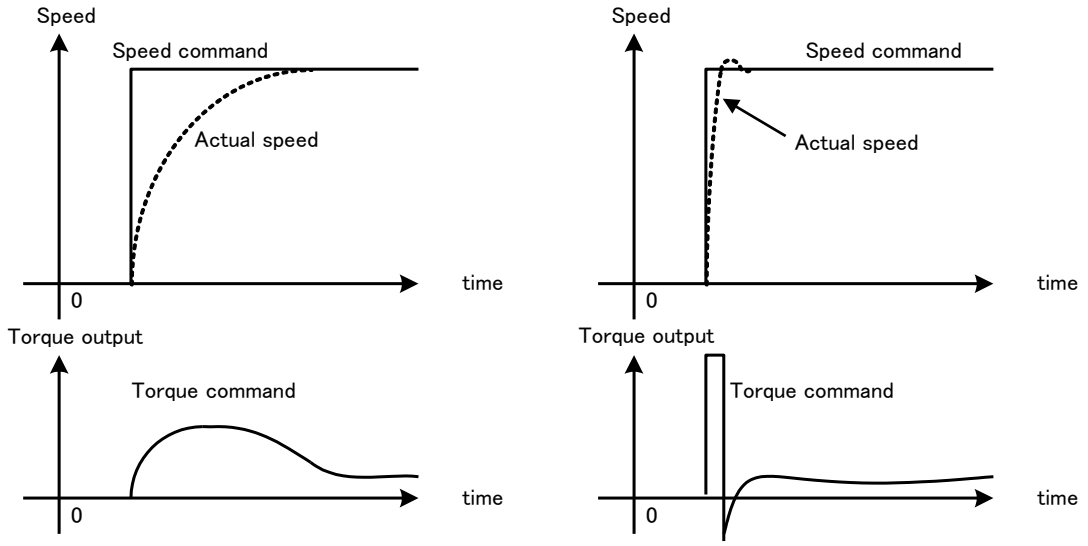

The above mentioned effect can be obtained by setting the P gain of ASR higher. However the response of the system becomes faster in this setting and there is the possibility that it affects negatively due to generation of vibration.

FUNCTION
F Codes
E Codes
C Codes
P Codes
H Codes
A Codes
b Codes
r Codes
J Codes
d Codes
U Codes
y Codes
K Codes

■ Output filter (d06/A48/b48/r48)

This specifies the time constant for the primary delay filter for speed regulator output.

Setting range: 0.000 to 0.100 (s)

This is used when machine resonance such as hunting or vibrations cannot be suppressed by adjusting the P gain or integral time. Generally speaking, the resonance amplitude can be decreased by increasing the output filter time constant, but increasing it too much may cause the system to become unstable.

■ Select speed control parameter 1, 2 -- “MPRM1”, “MPRM2” (E01 to E09 data = 78, 79)

The combination of the ON/OFF states of digital input terminal functions “**MPRM1**” and “**MPRM2**” selects one of 4 different level speed control parameter sets. These parameters are valid under vector control with speed sensor, V/f control with speed sensor, and sensorless vector control.

Input signal		Speed control constant
“MPRM2”	“MPRM1”	
OFF	OFF	Speed control constant 1: d01 to d06
OFF	ON	Speed control constant 2: A43 to A48
ON	OFF	Speed control constant 3: b43 to b48
ON	ON	Speed control constant 4: r43 to r48

■ Relationship between motor switching and speed control constant selection

If neither speed control constant 1 “MPRM1” nor speed control constant 2 “MPRM2” has been assigned to a digital input terminal, by switching the motor with input terminal “M2”, “M3”, or “M4”, speed control constants 1 to 4 are assigned to motor 1 to motor 4.

If speed control constant 1 “MPRM1” or speed control constant 2 “MPRM2” has been assigned to a digital input terminal, by switching the motor with digital input terminal functions “M2”, “M3”, or “M4”, speed control constants 1 to 4 can be selected with the terminal “MPRM1” or “MPRM2”. Furthermore, the parameter switching function (A42, b42, r42 = 1) will be invalid, and only the motor switching function will be valid (normally equivalent to A42, b42, r42 = 0).

■ ASR switching time (d25)

Speed control parameters switching by “MPRM1” and “MPRM2” signals is possible even during motor drive operation. For example, speed control P (Gain) and I (Integral time) listed can be switched. Switching these parameters during operation may cause an abrupt change of torque and result in a mechanical shock, depending on the driving condition of the load.

To reduce such a mechanical shock, the inverter decreases the abrupt torque change using the ramp function of ASR switching time (d25).

- Data setting range: 0.000 to 1.000 (s)

d07, A49, b49, r49 **d08, A50, b50, r50** **d29, A58, b58, r58**	**Speed control 1 to 4 (Notch filter resonance frequency)** **Speed control 1 to 4 (Notch filter attenuation level)** **Speed control 1 to 4 (Notch filter width)** **Reference function code: d25: ASR switching time**

These function codes specify speed control using notch filters. The notch filters make it possible to decrease the speed loop gain only in the vicinity of the predetermined resonance points, suppressing the mechanical resonance. The notch filters are available only under “vector control with speed sensor.” Setting the speed loop gain at a high level in order to obtain quicker speed response may cause mechanical resonance. If it happens, decreasing the speed loop gain the speed response will be slower in the whole operating range. In such a case, using the notch filter makes it possible to decrease the speed loop gain only in the vicinity of the predetermined resonance points and set the speed loop gain at a high level in other operating points, enabling a quicker speed response in the whole operating range.

4 resonance frequencies can be set, allowing the respective attenuation level and width to be set.

	Function code	Name	Data setting range	Unit
Notch filter 1	d07	Speed control 1 (Notch filter resonance frequency)	1 to 500	Hz
	d08	Speed control 1 (Notch filter attenuation level)	0 to 40	dB
	d29	Speed control 1 (Notch filter width)	0 (narrow) to 3 (wide)	-
Notch filter 2	A49	Speed control 2 (Notch filter resonance frequency)	1 to 500	Hz
	A50	Speed control 2 (Notch filter attenuation level)	0 to 40	dB
	A58	Speed control 2 (Notch filter width)	0 (narrow) to 3 (wide)	-
Notch filter 3	b49	Speed control 3 (Notch filter resonance frequency)	1 to 500	Hz
	b50	Speed control 3 (Notch filter attenuation level)	0 to 40	dB
	b58	Speed control 3 (Notch filter width)	0 (narrow) to 3 (wide)	-
Notch filter 4	r49	Speed control 4 (Notch filter resonance frequency)	1 to 500	Hz
	r50	Speed control 4 (Notch filter attenuation level)	0 to 40	dB
	r58	Speed control 4 (Notch filter width)	0 (narrow) to 3 (wide)	-

Setting the notch filter attenuation level to “0” (dB) disables the corresponding notch filter.

All 4 notch filters can be used for motor 1. They can also be used for motors 1 to 4.

Table 5.3-26

Setting condition	Notch filter 1	Notch filter 2	Notch filter 3	Notch filter 4
	d07, d08, d29	A49, A50, A58	b49, b50, b58	r49, r50, r58
Motor selection (“M2”, “M3”, “M4”) is not used. (E01 to E09, E98, E99 ≠ 12, 36, 37)	Set 4 types of notch filter for motor 1.			
Set “motor/parameter switching” for all parameter switching. (A42, b42, r42 = 1)				
Other than above	For motor 1	For motor 2	For motor 3	For motor 4

FUNCTION
F Codes
E Codes
C Codes
P Codes
H Codes
A Codes
b Codes
r Codes
J Codes
d Codes
U Codes
y Codes
K Codes

d09 to d13 **H147**	**Speed control (Jogging)** **(Speed command filter, Speed detection filter, P (Gain), I (Integral time), Output filter)** **Speed control (Jogging) (FF gain),**

These function codes are used to set up the speed control during jogging operation.

The block diagrams and function codes related to jogging operation are the same as for normal operation.
Since this speed control setting is exclusive to jogging operations, specify these function codes to obtain higher speed response to obtain smooth jogging operation.
For details, refer to the corresponding descriptions (d01 to d06) about the speed control sequence for normal operation.

Jogging operation is valid when the following run commands turn ON.

- **Jogging operation "JOG" (Function code data = 10)**
- **Jogging forward operation/stop command "FJOG", Jogging reverse operation/stop command "RJOG" (Function code data = 94, 95)**

📖 The jogging operation method can be performed from the keypad. Refer to Chapter 3 "3.3.7 Jogging operation" for details.

d14 to d18	PG option Ch2 (Feedback input) (Pulse input method), (Encoder pulse count), (Pulse scaling factor 1), (Pulse scaling factor 2), (Pulse train command filter time constant)

These function codes are compatible with PG option card input terminals [YA] and [YB], and they normally function as speed feedback side encoder input. (Sets speed feedback input for vector control with sensor and V/f control with sensor.)
By setting these function codes, operation is also possible as command side encoder input.
Refer to "■ PG input switching "PG-SEL" assignment" in Chapter 5 "5.3.2 E codes (Extension terminal functions)" for details.

■ PG option Ch2 (Pulse input method) (D14)

d14 specifies the speed feedback input format.

d14 data	Pulse input mode	Remarks
0	Frequency and direction	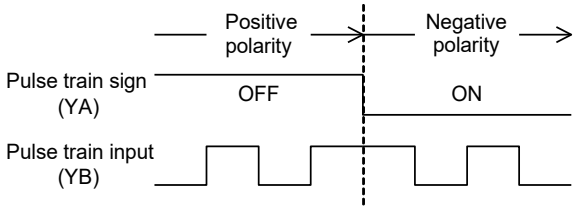
1	Forward and reverse pulse	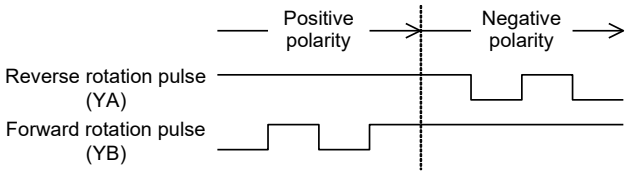
2	Quadrature A/B signal (B phase lead)	If using a dedicated Fuji motor for vector control, set to "2". 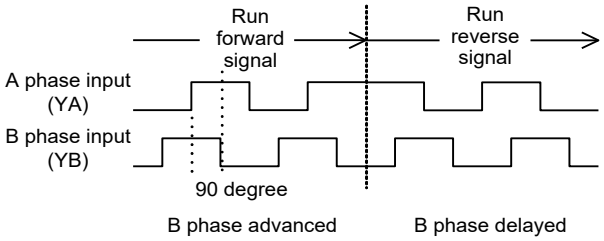
3	Quadrature A/B signal (A phase lead)	This setting is the inversion of d14 = 2. (Lead phase A Forward rotation) In case that YA and YB are reversely connected to the specified terminals, setting "3" to this function code can reverse the polarity of detected speed (position) without changing the connection.
4	A, B phase 90° phase difference (B phase lead) UVW signal (for synchronous motors)	If using a synchronous motor with UVW encoder, set to "4".

■ Feedback Input, Encoder pulse resolution (d15)

Set the encoder pulse count for speed feedback input.

- Data setting range: h.0014 to h.EA60 (hexadecimal fomat)

(20 to 60000 (P/R) when the above range is expressed in decimal format.)

If using a dedicated Fuji motor for vector control, set to "h.0400 (1024 P/R)".

FUNCTION
F Codes
E Codes
C Codes
P Codes
H Codes
A Codes
b Codes
r Codes
J Codes
d Codes
U Codes
y Codes
K Codes

■ Feedback Input, Pulse scaling factor 1 (d16) and Pulse scaling factor 2 (d17)

d16 and d17 specify the factors to convert the speed feedback input pulse rate into the motor shaft speed (min-1).

- Data setting range: 1 to 32767

Specify the data according to the transmission ratios of the pulley and gear train as shown below.

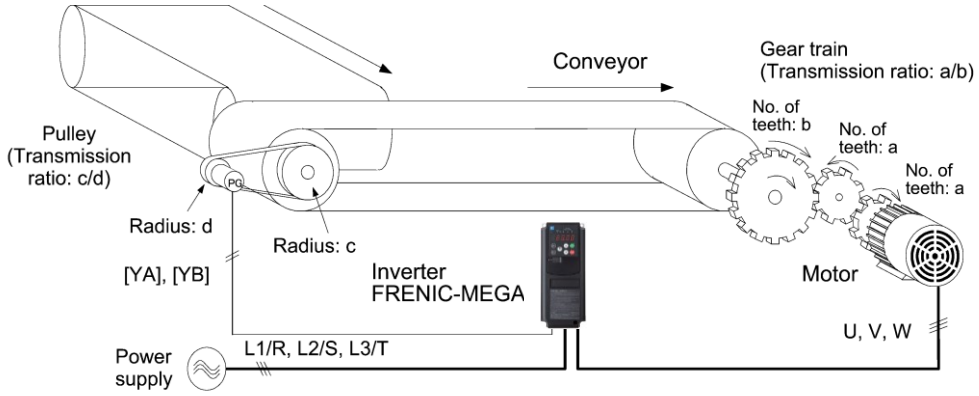

An example of a closed loop speed control system (conveyor)

Listed below are expressions for conversion between the speed feedback input pulse rate and the motor shaft speed.

$$\text{Motor shaft speed} = \frac{\text{Pulse scaling factor 2 (d17)}}{\text{Pulse scaling factor 1 (d16)}} \times \text{Encoder shaft speed}$$

$$\frac{\text{Pulse scaling factor 2 (d17)}}{\text{Pulse scaling factor 1 (d16)}} = \frac{b}{a} \times \frac{d}{c}$$

$$\text{Pulse scaling factor 1 (d16)} = a \times c$$

$$\text{Pulse scaling factor 2 (d17)} = b \times d$$

Note

- Under vector control with speed sensor, either mount the speed detector pulse encoder directly on the motor shaft, or mount it on a shaft with similar level of rigidity. A backlash, slip or deflection being on the mounting shaft could interfere with normal control. If the reduction ratio of the shaft with encoder is high, or the encoder pulse count is low, it may not be possible to perform control correctly.
- If using a dedicated Fuji motor for vector control, the encoder is mounted directly on the motor shaft, and therefore “1” should be set for both Pulse scaling factor 1 (d16) and Pulse scaling factor 2 (d17).

■ PG option Ch2 (Pulse input filter time constant) (d18)

A filter can be applied to pulse input by setting a time constant.

- Data setting range: 0.000 to 5.000 s

d21, d22 d23	Speed agreement / Speed deviation error (Hysteresis width, Detection timer) Speed deviation error processing

Speed agreement signal “DSAG” (Function code E20 to E24, E27 (data = 71))

■ **Speed agreement / Speed deviation error (Hysteresis width) (d21), (Detection timer) (d22)**

- Data setting range: (d21) 0.0 to 50.0 (%), in (%) of the maximum speed
  (d22) 0.00 to 10.00 (s)

When performing vector control with sensor/sensorless vector control, V/f control with sensor, or dynamic torque vector control with sensor, if the speed regulator’s deviation (deviation between speed command and estimated speed value/detected speed) is within the specified range (d21), the signal “DSAG” turns ON. If the deviation is out of the specified range (d21) for the specified period (d22), the signal turns OFF. This signal allows the user to check whether the speed regulator works properly or not.

PG error detected “PG-ERR” (Function code E20 to E24, E27 (data = 76))

■ **Speed agreement/PG error (Detection width (d21), Detection timer (d22), PG error (d23)**

- Data setting range (d21) 0.0 to 50.0 (%), in (%) of the maximum speed
  (d22) 0.00 to 10.00 (s)
  (d23) 0 to 5

d23 data	Function
0	Continue to run 1
1	Alarm (ErE: Speed inconsistency/excessive speed deviation) stop 1
2	Alarm (ErE: Speed inconsistency/excessive speed deviation) stop 2
3	Continue to run 2
4	Alarm (ErE: Speed inconsistency/excessive speed deviation) stop 3
5	Alarm (ErE: Speed inconsistency/excessive speed deviation) stop 4

When performing vector control with sensor/sensorless vector control, V/f control with sensor, or dynamic torque vector control with sensor, If the status outside the range (d21) for which the speed regulator deviation (between speed command and estimated speed value/detected speed) is set continues for equal to or longer than the set time (d22), the inverter judges that a PG error has occurred.

However, the detection conditions (exception conditions), processing after detection, and error detection width will differ depending on the d23 setting.

d23 data	Detection conditions	Processing after error detection	Error detection width with speed command > F04
0	When the inverter cannot follow the reference speed (even after soft-starting) due to a heavy overload or similar, so that the detected speed is less than the reference speed, the inverter does not interpret this situation as a PG error.	The inverter outputs the PG error detected signal “**PG-ERR**” and continues to run.	Hysteresis width = d21 x Maximum output frequency, which is constant, even if the speed command is above the base frequency (F04).
1		The inverter initiates a motor coast to stop, with the ErE alarm.	
2	No exception.		
3	When the inverter cannot follow the reference speed (even after soft-starting) due to a heavy overload or similar, so that the detected speed is less than the reference speed, the inverter does not interpret this situation as a PG error.	The inverter outputs the PG error detected signal “**PG-ERR**” and continues to run.	If the speed command is below the base frequency (F04), hysteresis width = d21 x Maximum output frequency, which is constant. If it is above the base frequency, hysteresis width = d21 x Speed command x Maximum output frequency /Base frequency (F04).
4		The inverter initiates a motor coast to stop, with the ErE alarm.	
5	No exception.		

Note Enabling an operation limiting function such as the torque limit and droop control will increase the deviation caused by a huge gap between the reference speed and detected one. In this case, the inverter may trip interpreting this situation as a PG error, depending on the running state. To avoid this incident, set the d23 data to “0” (Continue to run) to prevent the inverter from tripping even if any of those limiting functions is activated.

d24	Zero speed control (Refer to F23)

Refer to the description of F23.

d25	ASR switching time (Refer to d01)

Refer to the description of A42.

d27, d28	Servo lock (Gain switching time, Gain 2) (Refer to J97)

Servo lock (Gain switching time, Gain 2) is described in detail in the Function code J97 section.

d29	Speed control 1 (Notch filter width) (Refer to d07)

Speed control 1 (Notch filter width) is described in detail in the Function code d07 section.

d30	ASR gain setting *101

*101: Supported with ROM0500 or later.

By setting d30 to “1”, the ASR P gain and I time are automatically set from the currently estimated theoretical acceleration/deceleration time, and the estimated theoretical acceleration/deceleration time is saved to the parameters. After changing the setting, d30 automatically returns to “0”.

d32, d33	Speed limits / Over speed level 1 and 2 (Refer to H18)

Under speed control, the over speed detection levels are specified with 120% of these function codes.

The other hand, these function codes specifies the speed limit value under torque control.

Refer to the description of H18.

d35	Over speed detection level (Refer to H18)

d35 specifies the over speed detection level by percentage of the maximum frequency.

Overspeed level = Maximum output frequency (F03/A01/b01/r01) x d35(%)

Setting d35 data to “999” causes the inverter to issue an over speed alarm if either of the above conditions are satisfied.
or

Overspeed detection level

600 Hz
Maximum output frequency (F03/A01/b01/r01) x (d32 for forward rotation) x 120(%)
Maximum output frequency (F03/A01/b01/r01) x (d33 for reverse rotation) x 120(%)
(Maximum output frequency (F03/A01/b01/r01) + torque limiting (braking)（frequency rising limiter）H76) x 120(%)

Lowest level of the above

d41	Application specific function selection

d41 selects/deselects line speed control or master-follower operation (immediate synchronization mode at the start, start after synchronization).

Line speed control suppresses an increase in line speed resulting from the increasing radius of the take-up roll in a winder system.

Master-follower operation drives two or more shafts of a conveyer while keeping their positions in synchronization.

■ Application specific function selection (d41)

Sets whether to enable/disable constant surface speed control and master-follower operation (immediate synchronization mode at the start, start after synchronization).

d41 data	Function
0	Invalid
1	Line speed control with speed sensor Note: This control is valid only when “V/f control with speed sensor” or “Vector control with speed sensor (with auto torque boost)” is selected with F42, A14, b14, or r14 (data = 3 or 4).
2	Master-follower operation (Immediate synchronization mode at the start, without Z phase)
3	Master-follower operation (Follow-up mode during acceleration)
4	Master-follower operation (Immediate synchronization mode at the start, with Z phase)

In a winder system (e.g., roving frames, wiredrawing machines), if the inverter continues to run the motor at a constant speed, the take-up roll gets bigger with materials (roving, wire, etc.) and its radius increases so that the winding speed of the take-up roll increases. To keep the line speed (winding speed) constant, the inverter detects the winding speed using a speed sensor (encoder) and controls the motor rotation according to the encoder feedback.

FUNCTION
F Codes
E Codes
C Codes
P Codes
H Codes
A Codes
b Codes
r Codes
J Codes
d Codes
U Codes
y Codes
K Codes

[2] Line speed control

Machinery configuration of winder system and function code settings

Shown below is a machinery configuration of a winder system for which it is necessary to configure the function codes as listed below.

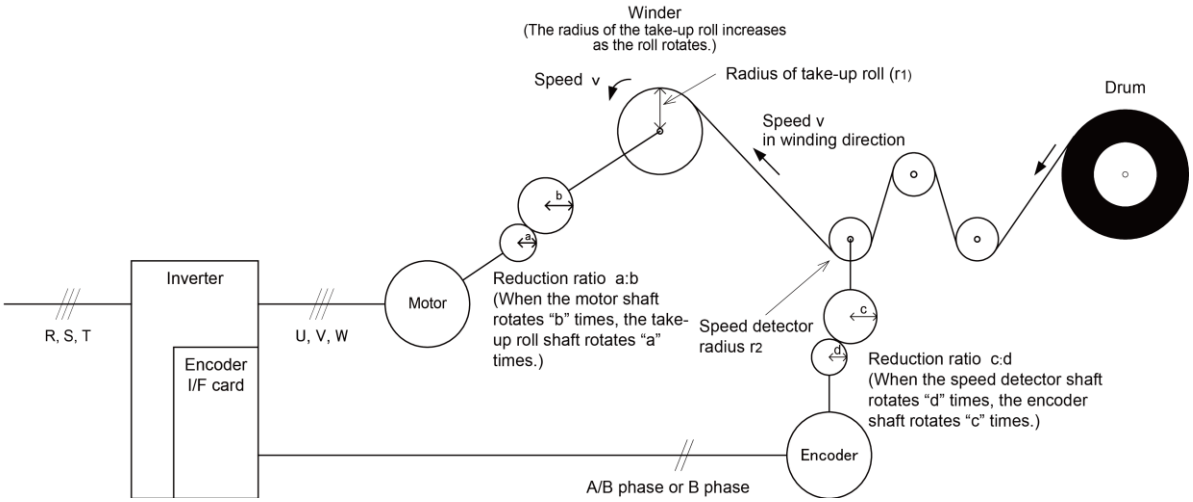

- Speed reduction ratio between motor shaft and take-up roll shaft a : b
- Speed reduction ratio between speed detector shaft and encoder shaft c : d
- Radius of take-up roll before winding r_1 [m]
- Radius of speed detector r_2 [m]

Setting the reduction ratio

Function code	Name	Setting
d15	Encoder pulse resolution	Encoder pulse resolution (P/R)
d16	Pulse scaling factor 1	Speed reduction ratio of the whole machinery (load) $\frac{K_2}{K_1}=\frac{r_2}{r_1}\times\frac{b}{a}\times\frac{d}{c}=\frac{d17}{d16}$ d16: Denominator factor for the speed reduction ratio (K1 = r1 × a ×c) d17: Numerator factor for the speed reduction ratio (K2 = r2 × b × d)
d17	Pulse scaling factor 2	

■ **Line speed command**

Under line speed control, speed commands should be given as line speed commands.

Setting with digital inputs

To digitally specify a line speed in m/min, make the following settings.

Function code	Name	Setting
E48	LED monitor details	5: Line speed
E50 E39	Display coefficient for speed monitor Speed display auxiliary coefficient	$K_s = \frac{240\pi \times a \times r_1}{p \times b}$ Ks: Display coefficient for transport time (E50) / Speed display auxiliary coefficient (E39) p: Number of motor poles a, b: Components of speed reduction ratio between motor shaft and take-up roll shaft (When the motor shaft rotates “b” times, the take-up roll shaft rotates “a” times.) r_1: Radius of take-up roll before winding (initial value) in m

Setting with analog inputs

To specify a line speed using analog inputs, set an analog input (0 to 100%) based on the following equation.

$$\text{Analog input (\%)} = \frac{p \times b \times 100}{240\pi \times r1 \times a \times f_{max}} \times V$$

V: Line speed in m/min
f_{max}: Maximum output frequency (F03, A01, b01, r01)

■ **Adjustment**

Like usual speed controls, it is necessary to adjust the speed command filter, speed detection filter, P gain, and integral time in the speed control sequence that controls the line speed at a constant level.

Function code	Name	How to adjust
d01	Speed control (Speed command filter)	If an excessive overshoot occurs for a speed command change, increase the filter constant.
d02	Speed control (Speed detection filter)	If ripples are superimposed on the speed detection signal so that the speed control gain cannot be increased, increase the filter constant to obtain a larger gain.
d03	Speed control P (Gain)	If hunting is caused in the motor speed control, decrease the gain. If the motor response is slow, increase the gain.
d04	Speed control I (Integral time)	If the motor response is slow, decrease the integral time.

■ **Cancel line speed control -- “Hz/LSC” (Function code E01 to E09, data = 70)**

Turning ON Hz/LSC cancels line speed control. This disables the frequency compensation of PI operation, resulting in no compensation for a take-up roll getting bigger and an increase in the winding speed. Use this signal to temporarily interrupt the control for repairing a thread break, for example.

“Hz/LSC”	Function
OFF	Enable line speed control (depending on d41 setting)
ON	Cancel line speed control (V/f control, without compensation for a take-up roll getting bigger)

■ **Hold line speed control frequency in the memory -- "LSC-HLD" (Function code E01 to E09, data = 71)**

If "**LSC/HLD**" is ON under line speed control frequency, stopping the inverter (including an occurrence of an alarm and a coast to stop command) or turning OFF "**Hz/LSC**" saves the current frequency command compensating for a take-up roll getting bigger, in the memory. At the time of restart, the saved frequency command applies and the inverter keeps the line speed constant.

"LSC-HLD"	Function
OFF	Disable (No saving operation)
ON	Enable (Saving the frequency command compensating for a take-up roll getting bigger)

Note Shutting down the inverter power during operation stop loses the frequency compensation data saved in the memory. At the time of restart, therefore, the inverter runs at the frequency without compensation so that a large overshoot may occur.

Function codes d153, d154, and d158 to d169 have been added to extend the constant surface speed control function. These extension functions are used when wishing to perform constant surface speed control with an encoder mounted on the motor shaft, or when wishing to perform operation by calculating the roll winding diameter to compensate the line speed setting.

d51 to d55	**For adjustment by manufacturer**

These function codes are for adjustment by the manufacturer. Unless otherwise specified, do not access these function codes.

d59 to d63	**PG option Ch1/Terminal [X] (Pulse train input)** **(Input method, Encoder pulse count, Filter time constant, Pulse scaling factor 1, 2)** **(Refer to F01)**

These function codes are compatible with pulse train input for PG option card input terminals [XA] and [XB], or inverter control input terminals [X6] and [X7]. They normally function as speed command side pulse train input. By setting these function codes, operation is also possible as speed feedback side encoder input. Refer to "■ PG input switching "PG-SEL" assignment" in Chapter 5 "5.3.2 E codes (Extension terminal functions)" for details. Refer to the description of the function code F01 for details on the pulse rate input.

d67	**Starting characteristic (Auto search mode: for speed sensorless vector control)**

Refer to the description of function code H09 for details on starting characteristics.

d68 to d69	**For adjustment by manufacturer**

These function codes are for adjustment by the manufacturer. Unless otherwise specified, do not access these function codes.

d70	**Speed control limiter**

d70 specifies a limiter for the PI value output calculated in speed control sequence under "V/f control with speed sensor" or "dynamic torque vector control with speed sensor."

A PI value output is within the "slip frequency x maximum torque (%)" in a normally controlled state.

If an abnormal state such as a temporary overload arises, the PI value output greatly fluctuates and it may take a long time for the PI value output to return to the normal level. Limiting the PI value output with d70 suppresses such abnormal operation.

- Data setting range: 0 to 100 (%) (assuming the maximum frequency as 100%)

[3] Master-follower operation

d71 to d78	Master-follower operation

With master-follower operation, the speed and position of the master shaft being run by another inverter is detected with an encoder (PG), and the speed and position of the follower shaft being run by this inverter are synchronized. Depending on the synchronization method, there are 4 methods: “Speed synchronization (tuning) operation” and “Immediate synchronization mode at the start (without Z-phase compensation)” that do not require the Z-phase, and “Start after synchronization” and “Simultaneous start synchronization operation (with Z-phase)” with Z-phase compensation.

PG option card OPC-PG or OPC-PG22 is required to allow a 2-system encoder to be connected.

Input the master side motor PG signals are input to terminal [XA], [XB], and [XZ], and the follower side motor PG signals to terminal [YA], [YB], and [YZ].

However, if “Without Z-phase compensation” is selected, it is not a problem if terminal [XZ] and [YZ] are not connected.

Master-follower operation method	Synchronization system	Z-phase signal connection	Master side = follower side (Required/Not required)			
			Number of motor poles	Motor reduction ratio	Encoder pulse count	Encoder reduction ratio
Speed synchronization (tuning)	Speed synchronization	Not required	Not required			
Master-follower (with Z-phase compensation)	Position synchronization*1	Required	Not required*3		Required*2	
Immediate synchronization mode at the start (without Z-phase compensation)		Not required			Not required*3	
Immediate synchronization mode at the start (with Z-phase compensation)		Required			Required*2	

*1 When performing position master-follower operation, control is performed so that the machine speed/position is synchronized with the encoder detected speed/position, and therefore the relationship between the machine speed/position and encoder detected speed/position should be master side = follower side. If this relationship is not observed, it will not be possible to perform position master-follower operation.

*2 When performing position master-follower operation, configure so that master side = follower side for the encoder pulse count and encoder reduction ratio.

*3 It is recommended that master side = follower side for the number of motor poles and motor reduction ratio, but if the configuration is such that the master side machine speed/position and follower side machine speed/position relationship is equal, the master side does not have to be equal to the follower side. By applying a scaling factor to pulse detection from the master side encoder, it is also possible to synchronously control the machine speed/position ratio for the master side and follower side.

■ Application-defined control (d41)

d41 data	Function
0	Speed synchronization (tuning) operation
2	Immediate synchronization mode at the start, without Z phase
3	Synchronized operation (Start after synchronization mode (with Z-phase))
4	Immediate synchronization mode at the start, with Z phase

Specifications of master-follower operation

	Item	Specification	Remarks
control	Speed control range under V/f control with speed sensor	1:100	4P motor, When using 1024P/R encoder Speed reduction ratio = 1:1 During running at constant speed
	Speed control range under vector control with speed sensor	1:1500	
	Position control accuracy	±2°	
Electrical specification	Input pulse rate	10 p/s to 100 kp/s *1	Maximum wiring length: 100 m (328 ft) *1 When using an AB phase encoder

*1 For PGs with an open collector output, the input pulse rate is 30 kp/s or below and the maximum wiring length is 20 m (66 ft).

Related function code list

The following table shows a list of function codes used for master-follower operation.

Function code list

Function Code	Name	Data setting range * Lists only those which are related	Unit	Remarks
F01, C30	Frequency setting 1, 2	0 to 12 12: Pulse train input	-	
F31 F61	Terminal [FM1] (Function selection) Terminal [FM2] (Function selection)	17: Master-follower angle deviation -100 to 0 to 100% -180 to 0 to +180 deg	-	
F42	Drive control selection	3, 4, 6 (speed control with speed sensor)	-	
E01 to E09 E98, E99	Terminal [X1] to [X9] *1 [FWD] [REV] (Function selection)	11(1011): “Hz2/Hz1” Frequency setting 2, 1	-	
E20 to E24 E27	Terminal [Y1] to [Y4] [Y5A/C], [30ABC] (Function selection)	29(1029): “SY” Synchronization complete	-	
d01, A43, b43, r43	Speed control (Speed command filter)	0.000 to 5.000	s	
d02, A44, b44, r44	(Speed detection filter)	0.000 to 0.100	s	
d03, A45, b45, r45	P (Gain)	0.01 to 200.0	Times	
d04, A46, b46, r46	I (Integral time)	0.000 to 5.000	s	
d70	(Limiter)	0.00 to 100.00	%	

Function Code	Name	Data setting range * Lists only those which are related	Unit	Remarks
d14	PG option Ch2 (Pulse input format)	0: Pulse train sign/pulse train input 1: Forward/reverse pulse 2: A, B phase 90° phase difference (B phase lead) 3: A, B phase 90° phase difference (A phase lead) 4: A, B phase 90° phase difference (B phase lead) UVW signal	-	
d15	(Encoder pulse resolution)*2	0014 to EA60 (hexadecimal format) (20 to 60000 (decimal format))	P/R	
d16	(Pulse scaling factor 1)	1 to 32767	-	
d17	(Pulse scaling factor 2)	1 to 32767	-	
d18	(Pulse train command filter time constant)	0.000 to 5.000	s	
d59	PG option Ch1/Terminal X (Pulse input format)	0: Pulse train sign/pulse train input 1: Forward/reverse pulse 2: A, B phase 90° phase difference (B phase lead) 3: A, B phase 90° phase difference (A phase lead)	-	
d60	(Encoder pulse resolution)*2	0014 to 0E10 (hexadecimal format) (20 to 3600 (decimal format))	P/R	
d61	(Pulse train command filter time constant)	0.000 to 5.000	s	
d62	(Pulse scaling factor 1)	1 to 32767	-	
d63	(Pulse scaling factor 2)	1 to 32767	-	
d41	Application control selection (Operation selection)	0: Disable 2: Master-follower operation (Immediate synchronization mode at the start (without Z phase)) 3: Master-follower operation (start after synchronization) 4: Master-follower operation (Immediate synchronization mode at the start (with Z phase))	-	
d71	Master follower operation (Main speed regulator gain)	0.00 to 1.50	Times	
d72	(APR P gain)	0.00 to 200.00	Times	
d73	(APR output + side limiter)	20 to 200, 999: No limiter	%	
d74	(APR output - side limiter)	20 to 200, 999: No limiter	%	
d75	(Z phase alignment gain)	0.00 to 10.00	-	
d76	(Offset angle between master and follower)	0 to 359	deg	
d77	(Synchronous completion detection angle)	0 to 100	deg	
d78	(Excessive error detection level)	0 to 65535 (1 = 10 pulses)	-	

*1: Pulse train input for terminal [X6] and [X7] is disabled when the PG interface card is installed.

*2: When performing master-follower operation (d41 = 2, 3, 4), use a PG with same pulse count of 20 to 3000 P/R for both the master side and follower side.

FUNCTION
F Codes
E Codes
C Codes
P Codes
H Codes
A Codes
b Codes
r Codes
J Codes
d Codes
U Codes
y Codes
K Codes

■ **Data setting for master-follower operation**

F01	Frequency setting 1
C30	Frequency setting 2

Select the pulse train input (F01/C30 = 12) as a reference command source.

Switching between master-follower operation and individual operation is possible using the "**Hz2/Hz1**" terminal command. A switching example is given below.

(Example) Turning terminal [X1] ON for individual operation during which a digital frequency command drives the inverter

Set F01 and C30 data to "12" and "0", respectively. And set E01 data to "11" to assign the "Hz2/Hz1" command to terminal [X1].

It is recommended to perform switching between master-follower operation and individual operation when the inverter is stopped. Switching when the inverter is running may activate the protective function. To avoid it, decrease the difference between the output frequency and the reference frequency to apply after switching.

F07/E10/E12/E14	Acceleration time
F08/E11/E13/E15	Deceleration time

Also in master-follower operation, the inverter controls the output frequency according to the acceleration /deceleration time as usual. Set the acceleration/deceleration time as short as possible. Be careful that, setting the acceleration/deceleration time longer than that of the reference inverter loses the following capability of the follower motor.

Tip Selecting "Vector control for induction motor with speed sensor" (F42 = 6) ignores the acceleration /deceleration times specified by the function codes, running the motor with the acceleration/deceleration time 0.0 s.

F23, F24	Starting frequency, Starting frequency (Holding time)
F25, F39	Stop frequency, Stop frequency (Holding Time)

Set the starting frequency and stop frequency as low as possible to the extent that the motor can generate enough torque. During master-follower operation, basically set the holding times for the starting frequency and stop frequency at 0.0 s. Running at a frequency lower than the stop frequency or starting frequency the master cannot be followed. Be careful that specifying the holding time deteriorates the following capability at the time of startup or stop.

Tip Selecting "Vector control for induction motor with speed sensor" (F42 = 6) ignores the starting/stop frequencies (holding time) specified by the function codes, running the motor with the holding time 0.0 s.

F31, F61 Terminal [FM1], [FM2] (Function selection)

By setting “17: Master-follower angle deviation” for F31 and F61, the master-follower angle deviation is output to analog output. An example when voltage output is set is shown in the following diagram.

F29, F32 Terminal [FM1], [FM2] (Operation selection)	Voltage output
0: Voltage output (0 to +10 VDC)	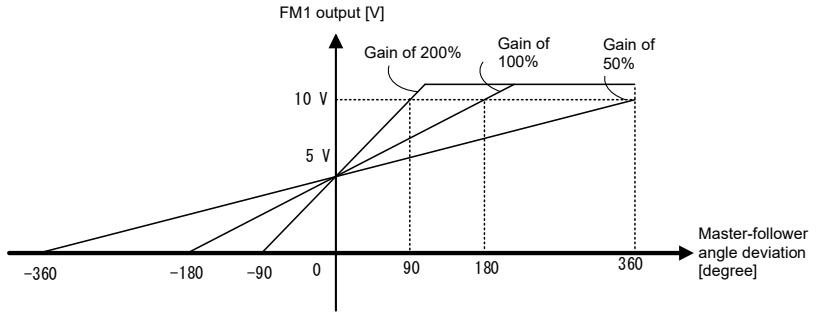
4: Voltage output (0 to ±10 VDC)	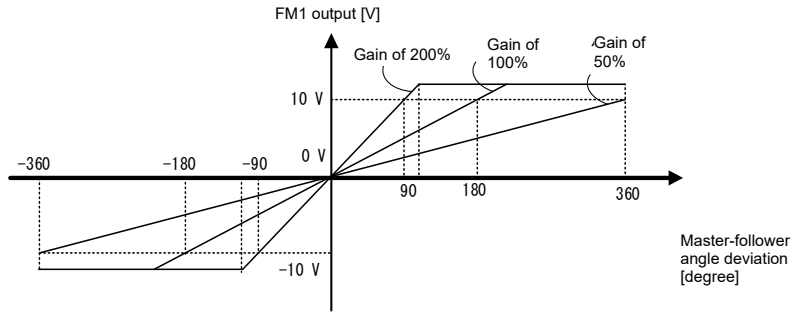

Master-follower angle deviation monitoring with analog output voltage

F42 Drive control selection

To perform master-follower operation, select a control mode with speed sensor (F42 = 3, 4 or 6). Usually, select “V/f control with speed sensor” (F42 = 3).

d01 to d05 Speed Control
(Speed command filter, Speed detection filter, P (Gain), I (Integral time), FF(Gain))

These function codes set up the speed control response. Refer to d01.

d14 to d17 PG option Ch2 (Feedback input)
(Pulse input method), (Encoder pulse count), (Pulse scaling factor 1), (Pulse scaling factor 2),

These function codes specify the speed feedback input under vector control with speed sensor (F42 = 3, 4 or 6).

Refer to d14 to d17.

d18 PG option Ch2 (Feedback input) (Filter time constant)

Sets the filter time constant for feedback input. The larger the time constant, the slower the response. Specify the proper filter time constant taking into account the response speed of the machine (load). If the pulse is lower and frequency command fluctuates, set larger time constant.

FUNCTION
F Codes
E Codes
C Codes
P Codes
H Codes
A Codes
b Codes
r Codes
J Codes
d Codes
U Codes
y Codes
K Codes

d59, d60 **d62, d63**	PG option Ch1/Terminal X (Pulse train input) (Pulse input method, Encoder pulse count, Pulse scaling factor 1, Pulse scaling factor 2)

These function codes specify the command frequency to apply to the inverter. The setting items are the same as for feedback input (d14 to d17).

Refer to F01.

d61	PG option Ch1/Terminal X (Pulse train input) (Filter time constant)

Set filter time constant for pulse train input. The larger the time constant, the slower the response. Specify the proper filter time constant taking into account the response speed of the machine (load). If the pulse is lower and frequency command fluctuates, set larger time constant.

d71	Master follower operation (Main speed regulator gain)

d71 adjusts the main speed regulator gain to control the response and the steady-state deviation. Usually, it is not necessary to change the factory default. Selecting simultaneous start synchronization without Z phase compensation (d41 = 2) only enables the setting made with d71.

d72	Master-follower operation APR P gain

d72 determines the response of the automatic position regulator (APR).

If the APR output comes to be a single rotation of the encoder shaft per second when the phase angle error (position deviation) between the master and follower PGs becomes equal to a single rotation of the encoder shaft, that gain is assumed to be 1.0.

Setting a too large value to the gain data easily causes hunting, and setting a too small value results in a large steady-state deviation. Adjust the gain referring to the d72 setting below. If the d72 setting is adjusted, it is recommended that d02 also be adjusted.

(Refer to “Master-follower operation without Z-phase compensation control block diagram (d41 = 2)” and “Master-follower operation with Z-phase compensation control block diagram (d41 = 3 or 4)” for detailed block diagrams.)

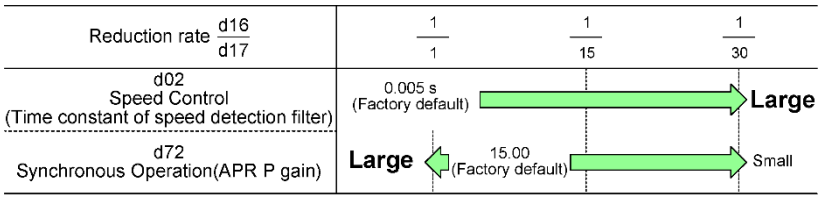

d72 setting guide

d73	Master follower operation (APR positive output limiter)
d74	Master follower operation (APR negative output limiter)

These function codes specify the limits of APR output relative to the master motor speed.

Specification of “999” disables the limiter.

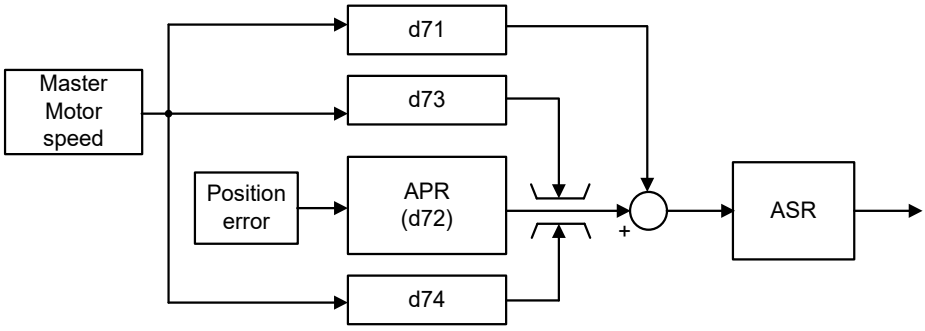

Operation of APR output limiter

(Refer to “Master-follower operation without Z-phase compensation control block diagram (d41 = 2)” and “Master-follower operation with Z-phase compensation control block diagram (d41 = 3 or 4)” for detailed block diagrams.)

d75	Master follower operation (Z phase alignment gain)

If the APR output reaches the maximum frequency when the phase angle error between the master and follower PGs (position deviation) becomes 10% of the pulse rate at the maximum frequency, that gain is assumed to be 1.0.

Usually, it is not necessary to change the factory default.

If the reduction ratio is small and the encoder pulse count is low, it is necessary to decrease the Z phase alignment gain relative to the factory default.

d76	Master follower operation (Offset angle between master and follower)

In follow-up mode during acceleration, the follower inverter delays starting to synchronize the Z phase with that of the master motor by the offset angle specified by this function code.

FUNCTION
F Codes
E Codes
C Codes
P Codes
H Codes
A Codes
b Codes
r Codes
J Codes
d Codes
U Codes
y Codes
K Codes

d77	Master follower operation (Synchronization completion detection angle)

d77 specifies the synchronization completion detection angle. If the absolute value of the phase angle error (position deviation) between the master and follower PGs becomes equal to or below the synchronization completion detection angle specified by d77, the inverter issues a synchronization completed signal "**SY**", provided that the E20 to E24 or E27 data (Terminal function) is set to "29" (Synchronization completed).

Once turned ON, the synchronization completed signal "SY" is kept ON for 100 ms.

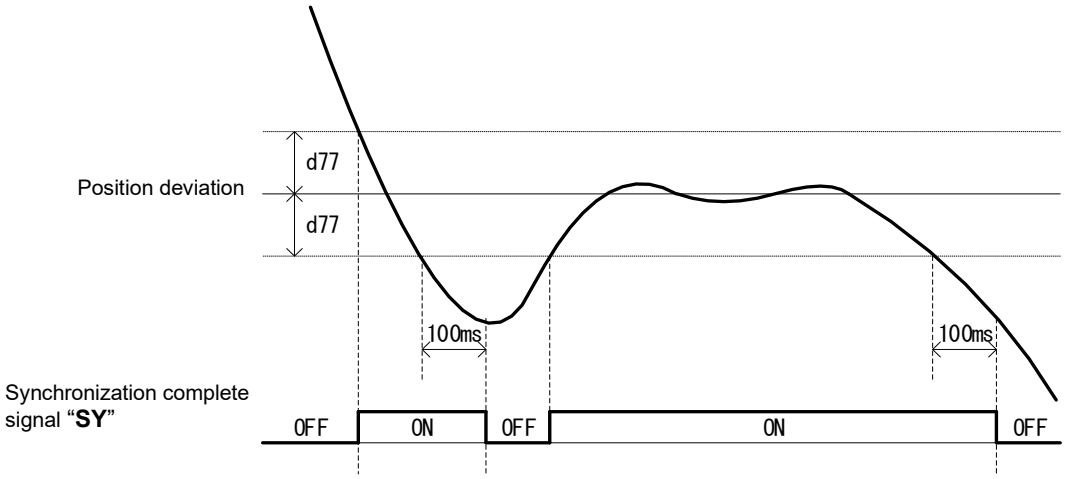

Synchronization complete detection signal "**SY**"

d78	Master-follower operation (Excessive error detection level)

d78 specifies the detection level for excessive error alarm (Ero). If the absolute value of the phase angle deviation (position deviation) between the master and follower PGs exceeds 10 times the d78 setting, the inverter issues an alarm Ero and shuts down its output.

During master-follower operation, the inverter always monitors an excessive deviation. The d78 setting should be made taking into account that the deviation temporarily increases immediately after the start of running.

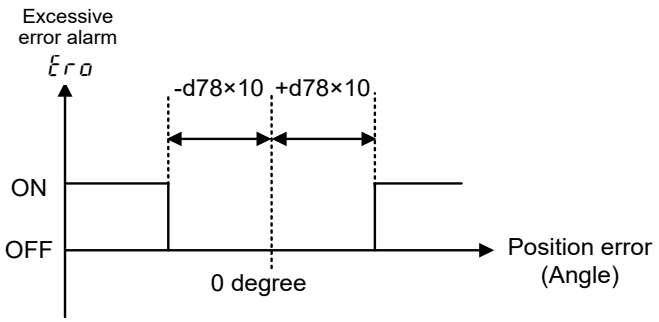

Excessive error alarm Ero

■ Checking the encoder connection method and rotation direction

Before beginning master-follower operation, be sure to check the machine system travel direction and run command direction for both the master side and follower side, the motor rotation direction, and the rotation direction with encoder pulses.

If these are not set correctly, it will not be possible to perform operation correctly when performing master-follower operation.

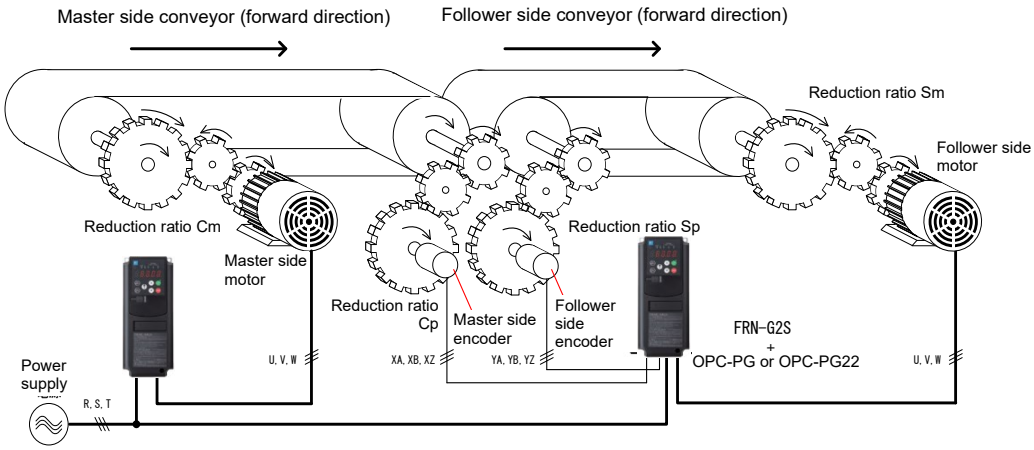

Conveyor synchronization system configuration example

Refer to the instruction manual for PG interface card “OPC-PG”or “OPC-PG22” for details on how to install the PG interface card in the inverter.

Connect the master side motor encoder output to terminal [XA], [XB], and [XZ], and connect the follower side motor encoder output to terminal [YA], [YB], and [YZ].

The motor and encoder forward direction is rotation to the left (CCW) as viewed from the shaft. When rotating in the forward direction (CCW), either connect so that encoder output pulses are forward rotation signals (B phase leads A phase by 90°), or switch the A phase and B phase by switching the d14 and d59 setting values.

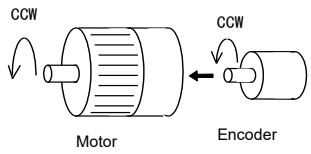

Motor and encoder forward direction

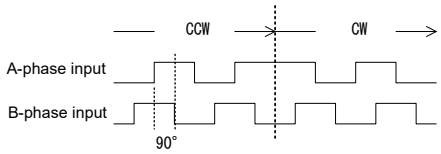

Encoder rotation direction and output signals

FUNCTION
F Codes
E Codes
C Codes
P Codes
H Codes
A Codes
b Codes
r Codes
J Codes
d Codes
U Codes
y Codes
K Codes

Master side inverter

Inverter	Run command source	Forward rotation (FWD) When FWD-CM shorted		Reverse rotation (REV) When REV-CM shorted	
	Connection to motor	**Connection in UVW phase order**	Connection not in UVW phase order	Connection in UVW phase order	Connection not in UVW phase order
Motor	Rotation direction	**CCW**	CW	CW	CCW
		CW	CCW	CCW	CW
Master side conveyor	Rotation direction	**Forward direction**	Reverse direction	Reverse direction	Forward direction
Master side encoder	Rotation direction	**CW**	CCW	CCW	CW
	Output signal	**A phase lead**	B phase lead	B phase lead	A phase lead
PG option card (OPC-PG)	When XA-A phase, XB-B phase connected I/O check: “4_15” polarity	**-: Reverse rotation (REV)**	+: Forward rotation (FWD)	+: Forward rotation (FWD)	-: Reverse rotation (REV)
	When XA-B phase, XB-A phase connected I/O check: “4_15” polarity	**+: Forward rotation (FWD)**	-: Reverse rotation (REV)	-: Reverse rotation (REV)	+: Forward rotation (FWD)

CW: Clockwise (right rotation) as viewed from shaft side

CCW: Counterclockwise (left rotation) as viewed from shaft side

shows the rotation direction in the previous “Conveyor synchronization system configuration example”.

Follower side inverter

Inverter	Run command source	Forward rotation (FWD) When FWD to CM shorted		Reverse rotation (REV) When REV-CM shorted	
	Connection with motor	**Connection in UVW phase order**	Connection not in UVW phase order	Connection in UVW phase order	Connection not in UVW phase order
Motor	Rotational direction	**CCW**	CW	CW	CCW
		CW	CCW	CCW	CW
Follower side conveyor	Rotation direction	**Forward direction**	Reverse direction	Reverse direction	Forward direction
Follower side encoder	Rotational direction	**CCW**	CW	CW	CCW
	Output signal	**B phase lead**	A phase lead	A phase lead	B phase lead
PG option card (OPC-PG)	When YA-A phase, YB-B phase connected I/O check: “4_17” polarity	**+: Forward rotation (FWD)**	-: Reverse rotation (REV)	-: Reverse rotation (REV)	+: Forward rotation (FWD)
	When YA-B phase, YB-A phase connected I/O check: “4_17” polarity	**-: Reverse rotation (REV)**	+: Forward rotation (FWD)	+: Forward rotation (FWD)	-: Reverse rotation (REV)

CW: Clockwise (right rotation) as viewed from shaft side

CCW: Counterclockwise (left rotation) as viewed from shaft side

shows the rotation direction in the previous “Conveyor synchronization system configuration example”.

If the master side and follower side encoder detected rotation direction differs from that of the follower side motor rotation direction, wire correctly taking the following wiring example into consideration. When d41 = 0, 2, there is no need for Z-phase wiring.

System configuration and encoder wiring method
(if running follower side conveyor in forward direction with d41 = 2, 3, 4 forward command)

System configuration example	Encoder connection terminal
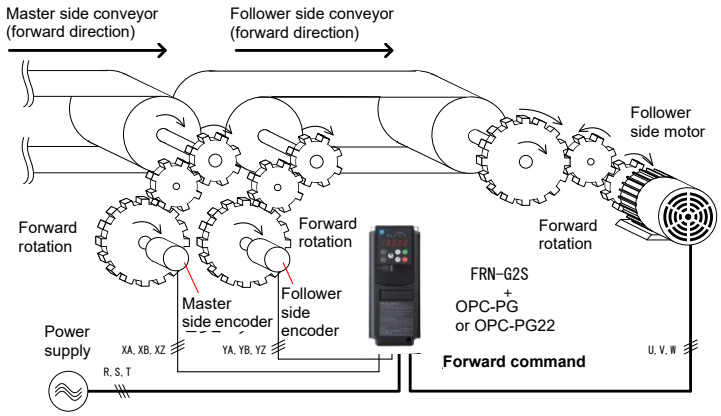	Master side encoder wiring → XA and XB are connected as is. 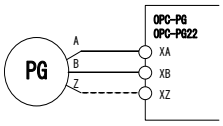 Follower side encoder wiring → YA and YB are connected as is. 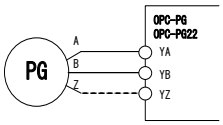
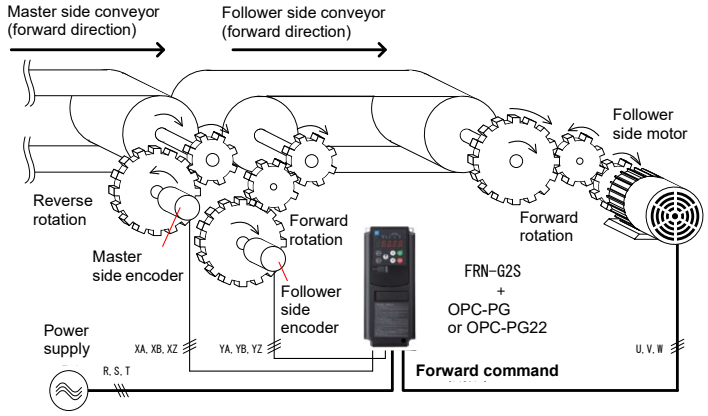	Master side encoder wiring → The XA and XB connection is reversed. 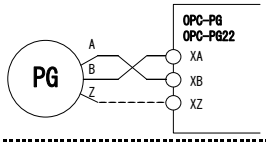 → Or XA and XB are connected as is. and d59 is set to 3 (*) 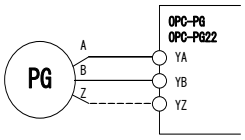 Follower side encoder wiring → YA and YB are connected as is. 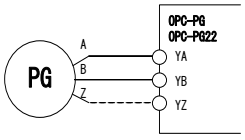
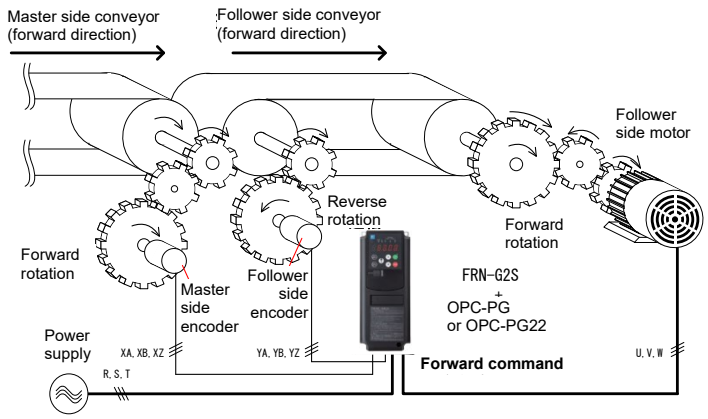	Master side encoder wiring → XA and XB are connected as is. 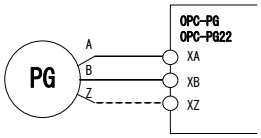 Follower side encoder wiring → The YA and YB connection is reversed. 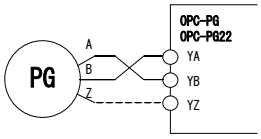 → Or YA and YB are connected as is. and d14 is set to 3 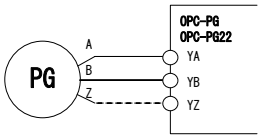

FUNCTION
F Codes
E Codes
C Codes
P Codes
H Codes
A Codes
b Codes
r Codes
J Codes
d Codes
U Codes
y Codes
K Codes

(*) With this machine configuration, only if d41 = 2 (master-follower operation (immediate synchronization mode at the start (without Z-phase)), master-follower conveyor operation can be performed in forward direction by setting the run command for the follower side to reverse rotation (REV) without “connecting as is”. If d41 = 3, 4 for this machine configuration, and if d41 = 2, 3, or 4 in other machine configuration examples, by setting the follower side run command to forward rotation (FWD), master-follower conveyor operation can be performed in the same direction.

If the run command differs from the conveyor movement direction, it will be necessary to either switch the motor wiring (e.g., U-phase-U-phase, V-phase-V-phase, W-phase-W-phase ↔ U-phase-U-phase, V-phase-W-phase, W-phase-V-phase), or switch the run command (FWD ↔ REV).

If the rotation direction detected by the encoder differs after switching the conveyor movement direction, switch the encoder wiring again (A-phase-A-phase, B-phase-B-phase ↔ A-phase-B-phase, B-phase-A-phase), or switch the d14 and d59 setting values (“2” ↔ “3”).

■ **Rotation direction**

The rotation direction in master-follower operation is determined by the run command and the rotation direction detected by the encoder for the master side and follower side. If the position synchronization system is selected, the motor may stop due to a deviation overflow alarm (Ero).

Follower side Run command	Master side independent rotation detection direction I/O check “4_15” polarity	Follower side independent rotation detection direction I/O check “4_17” polarity	Follower side rotation direction when performing master-follower operation	
			• Speed synchronization • Immediate synchronization mode at the start (without Z-phase)	• Start after synchronization • Immediate synchronization mode at the start (with Z phase)
Forward rotation (FWD) When FWD to CM shorted	+: Forward rotation (FWD)	+: Forward rotation (FWD)	Forward rotation (FWD)	Forward rotation (FWD)
		-: Reverse rotation (REV)	Reverse rotation (REV)	Stop*
	-: Reverse rotation (REV)	+: Forward rotation (FWD)	Reverse rotation (REV)	Stop*
		-: Reverse rotation (REV)	Forward rotation (FWD)	Reverse rotation (REV)
Reverse rotation (REV) When REV-CM shorted	+: Forward rotation (FWD)	+: Forward rotation (FWD)	Forward rotation (FWD)	Forward rotation (FWD)
		-: Reverse rotation (REV)	Reverse rotation (REV)	Stop*
	-: Reverse rotation (REV)	+: Forward rotation (FWD)	Reverse rotation (REV)	Stop*
		-: Reverse rotation (REV)	Forward rotation (FWD)	Reverse rotation (REV)

* If the master side rotates in the direction in which the follower side inverter stops, pulses are counted, and therefore a deviation overflow alarm (Ero) occurs. If the master side then returns in the follower side inverter rotation direction, synchronization is resumed from the position where the deviation is 0.

■ Reduction ratio setting

With master-follower operation, it is necessary to set the reduction ratio appropriately for the motor-machine system and encoder-machine system based on the system configuration.

Synchronization system			Speed synchronization	Position synchronization
Master side	Command encoder pulse count	d60	• If same as follower side encoder d60 = d15 • If different from follower side encoder d60 = Master side encoder pulse count	Be sure to set the same encoder pulse count as the follower side. d60 = d15 * If the master side and follower side differ, position synchronization will not be possible.
	Command pulse scaling factor 1, 2	d62 d63	$\frac{d63}{d62}=\frac{1}{S_m \times C_p}$ S_m: Follower side machine system reduction ratio C_p: Master side encoder reduction ratio	$\frac{d63}{d62}=\frac{1}{S_m \times C_p}$ S_m: Follower side machine system reduction ratio C_p: Master side encoder reduction ratio Master side/follower side reduction ratio (pulse scaling factor) • If synchronization performed at 1:1 ratio Same configuration ($C_p = S_p$) • If synchronization performed at 1/n master side/follower side ratio Set the scaling factor only to ($C_p = S_p$ x 1/n) with configuration left unchanged.
Follower side	Feedback encoder pulse count	d15	Set the follower side encoder pulse count.	Set the follower side (= master side) encoder pulse count.
	Feedback pulse scaling factor 1, 2	d16 d17	$\frac{d17}{d16}=\frac{1}{S_m \times S_p}$ S_m: Follower side machine system reduction ratio S_p: Follower side encoder reduction ratio	$\frac{d17}{d16}=\frac{1}{S_m \times S_p}$ S_m: Follower side machine system reduction ratio S_p: Follower side encoder reduction ratio The same configuration is recommended for the master side/follower side reduction ratio (pulse scaling factor).
Number of motor poles		P01	Set the number of motor poles at the follower side.	It is recommended that the number of poles for each motor be the same at both the master side and follower side. If the number of poles is different, depending on the machine system configuration (e.g., reduction ratio), construct the system so that the machine speed/position becomes equal for the master side and follower side.

FUNCTION
F Codes
E Codes
C Codes
P Codes
H Codes
A Codes
b Codes
r Codes
J Codes
d Codes
U Codes
y Codes
K Codes

■ Checking the encoder pulse count

Before beginning master-follower operation, be sure to check the encoder pulse count for both the master side and follower side. If the encoder pulse count is not correctly detected, it will not be possible to perform operation correctly when performing master-follower operation.

If the encoder pulse count is not correctly detected, it means that the number of motor poles (P01/A15), encoder pulse count (d15, d60), and pulse scaling factor 1/2 (d16/d17,d62/d63) settings do not match that of the actual machine configuration.

Check the PG pulse count at “4_15: PG Detected Pulse Count (Command (Master) Side AB-Phase))” and “4_17: PG Detected Pulse Count (Feedback (Follower Side AB-Phase))” at keypad menu No. 4“I/O Check”. Refer to Chapter 3 “3.4.4 Checking I/O signal status “I/O Checking: 4. I_O”” for details on the pulse count display method.

Specification	Symbol, calculation formula	Calculation example
Operating frequency [Hz]	fset	20 [Hz]
Number of motor poles	P01/A15	4 poles
Encoder pulse count [P/r]	d15/d60	1000 [P/r]
Pulse scaling factor 1/2	d16/d17, d62/d63	1/30
Motor speed [r/min]	120 x fset / P01	600 [r/min]
Motor speed [r/s]	2 x fset / P01	10 [r/s]
I/O check 4_15 [kP/s] I/O check 4_17 [kP/s]	Motor speed [r/s] x Encoder pulse count [P/r] x Pulse scaling factor 1/2 / 1000	0.333 [kP/s]

■ Speed master-follower operation

With speed master-follower operation, master-follower operation is performed in such a way as to keep the difference in speed between the master side and follower side to 0.
The follower side speed is controlled to ensure that the deviation between the master side pulse frequency and follower side pulse frequency is 0, but phase difference synchronization is not performed. Furthermore, even if the speed deviation nears 0, an “SY” synchronization complete signal is not output.

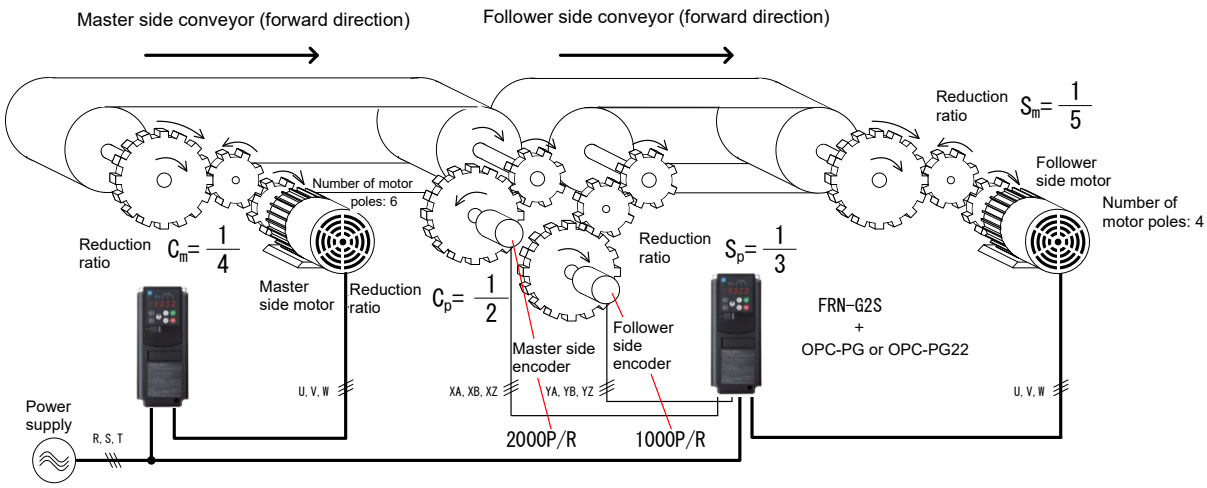

Speed synchronization system configuration example (when using gears)

Encoder connection

Master (command) side connection	Follower (feedback) side connection
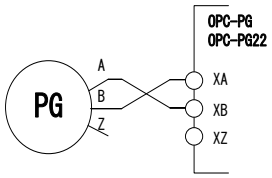	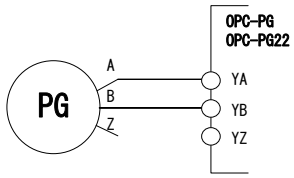

(Note 1) With speed synchronization, there is no need to connect to terminal [XZ] and [YZ].

(Note 2) By switching the d14 and d59 setting values (“2” ↔ “3”) with XA = A-phase and XB = B-phase, it is possible to switch between A-phase and B-phase.

Settings for speed master-follower operation

Function code		Setting value	Remarks
F01	Frequency setting 1	12	Pulse train input
F42	Drive control selection 1	3 4	V/f control with speed sensor Dynamic torque vector control with speed sensor
P01	Number of motor poles	4	Sets the number of poles for the follower side motor. With speed synchronization, this does not necessarily have to match the number of motor poles for the master side.
d41	Application selection	0	Disable (normal control)
d15	Feedback (feedback input) (Encoder pulse resolution)	03E8 (hexadecimal format) (1000)	With speed synchronization, this does not necessarily have to match the master side pulse count.
d16	(Pulse scaling factor 1)	1	$\frac{d17}{d16}=\frac{1}{S_m \times S_p}=\frac{1}{\frac{1}{5}\times\frac{1}{3}}=\frac{15}{1}$
d17	(Pulse scaling factor 2)	15	
d60	Command (pulse train input) (Encoder pulse resolution)	07d0 (hexadecimal format) (2000)	With speed synchronization, this does not necessarily have to match the follower side pulse count.
d62	(Pulse scaling factor 1)	1	$\frac{d63}{d62}=\frac{1}{S_m \times C_p}=\frac{1}{\frac{1}{5}\times\frac{1}{2}}=\frac{10}{1}$
d63	(Pulse scaling factor 2)	10	

FUNCTION
F Codes
E Codes
C Codes
P Codes
H Codes
A Codes
b Codes
r Codes
J Codes
d Codes
U Codes
y Codes
K Codes

■ **Immediate synchronization mode at the start operation**

With immediate synchronization mode at the start operation (d41 = 2, 4), master-follower operation is performed in such a way as to maintain the phase difference between the master side and follower side the moment operation is changed from independent operation to master-follower operation. The follower side speed and position are controlled to ensure that the deviation between the master side pulse total value and follower side pulse total value is 0. If the deviation reaches the synchronization complete detection angle (function code d77) or lower, an “SY” synchronization complete signal is output. Furthermore, if synchronization shifts, and the deviation exceeds the set deviation overflow value (10 times function code d78), an error alarm occurs, and output is cut off.

If d41 = 4, if a miscount occurs due to such reasons as noise in the total A/B-phase count, error correction is performed based on the phase difference for the Z-phase.

While the follower side run command is ON, the phase difference continues to be monitored even when the master side has stopped (provided that operation is not changed to independent operation), and when operation at the master side resumes, control is performed in such a way as to ensure that the phase difference for the Z-phase is kept constant again for both the master side and follower side.

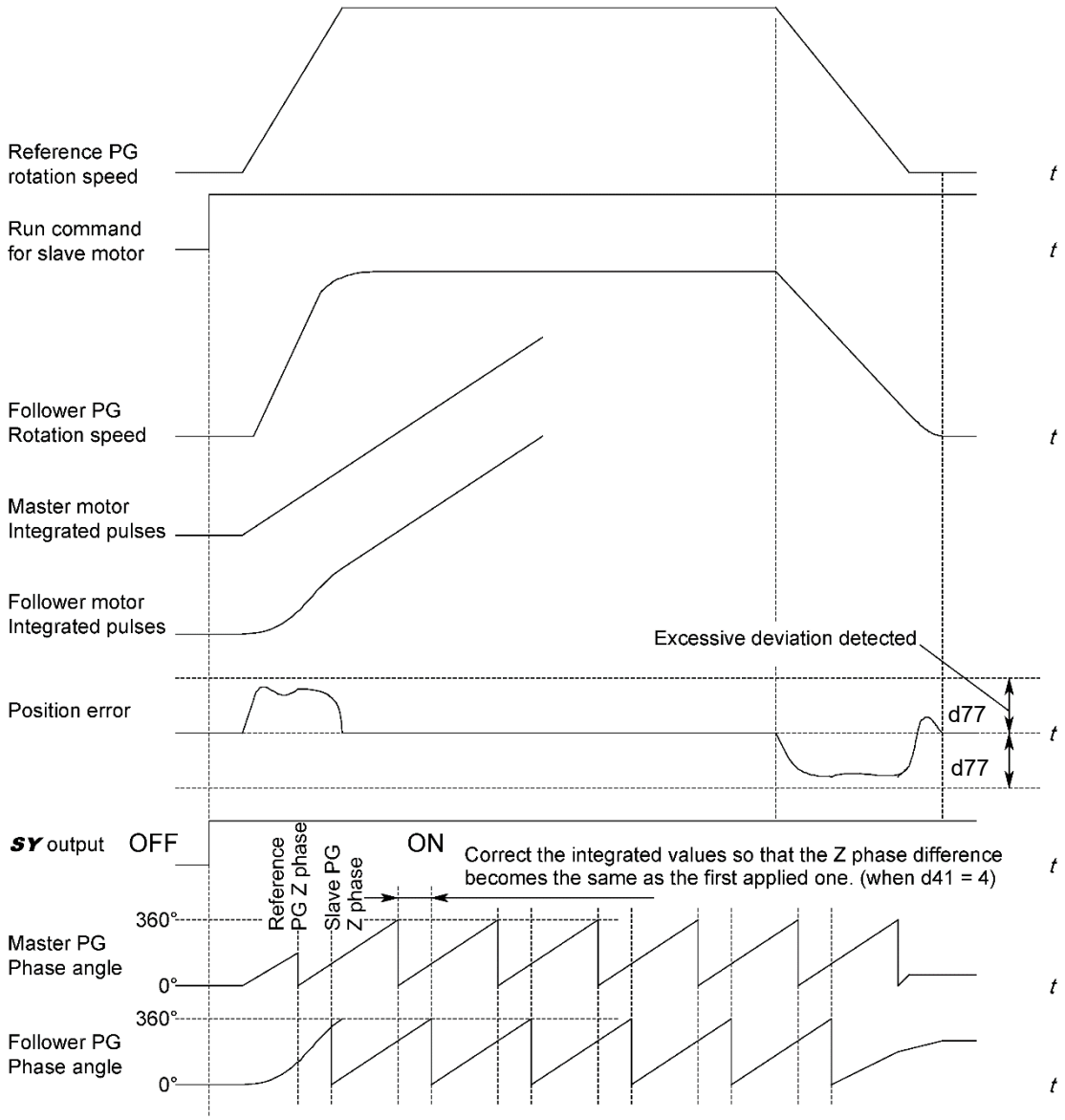

■ **Start after synchronization operation**

Start after synchronization operation (d41 = 3) involves control which ensures that each Z-phase matches bases on the initially detected master side and follower side Z-phase (position) after operation starts. At this time, the follower side is delayed by a maximum of 1 rotation when starting up (start after synchronization operation). Once start after synchronization is complete, start after synchronization operation is never performed again provided that master-follower operation (Note 1) is not canceled.

By changing the function code d76 setting, the Z-phase synchronization angle with the master side and follower side can be adjusted.

The follower side speed and position are controlled to ensure master side position and follower side position are added up inside the inverter, and the difference (hereinafter referred to as deviation) is always 0.

If a miscount occurs due to such reasons as noise in the total A/B phase count, error correction is performed based on the phase difference for the Z-phase.

If the deviation reaches the synchronization complete detection angle (function code d77) or lower, an “SY” synchronization complete signal is output.

If synchronization shifts, and the deviation exceeds the set deviation overflow detection value (10 times function code d78), an error alarm occurs, and output is shut off.

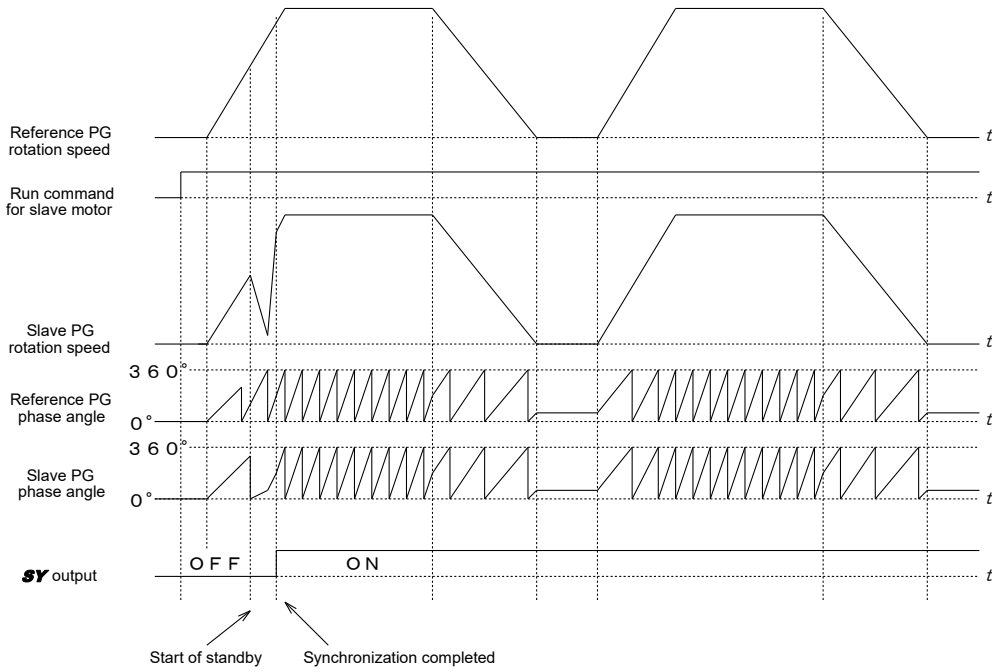

Note: Master-follower operation cancellation conditions

Master-follower operation is canceled in the following cases.

- When the follower side run command turns OFF
- When the “BX” coast to stop command turns ON, and the “STOP” forced stop command turns ON
- When an alarm occurs
- When switching to independent operation (realized by switching between F01 and C30 using “Hz2/Hz1” terminal functions)
- During torque control, during operation with commercial power supply

FUNCTION
F Codes
E Codes
C Codes
P Codes
H Codes
A Codes
b Codes
r Codes
J Codes
d Codes
U Codes
y Codes
K Codes

Setting example

Setting example for master-follower operation without Z-phase compensation (d41 = 2) -(1)-

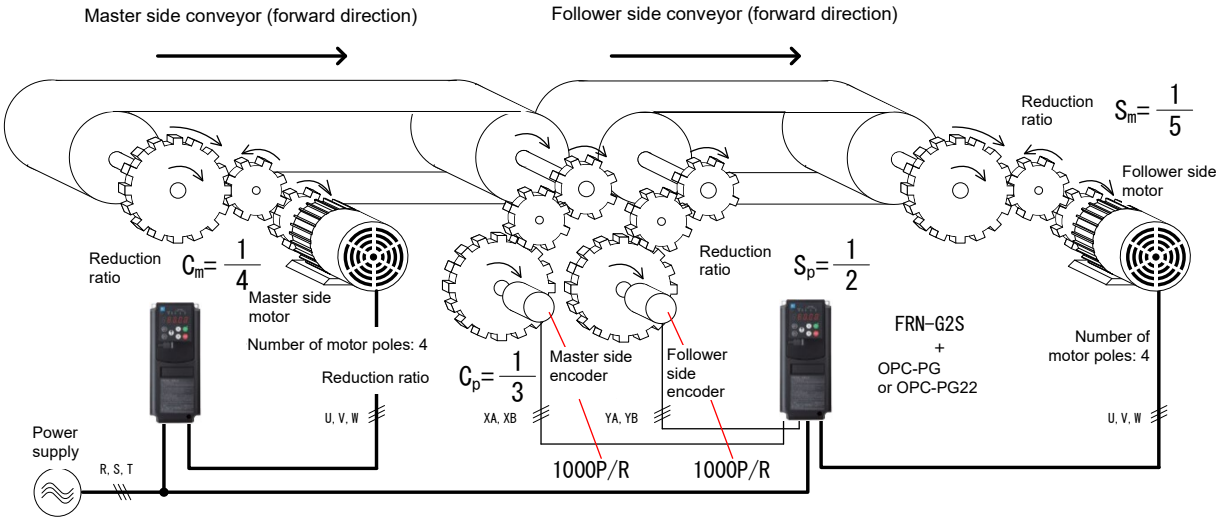

Master-follower operation system configuration example (without Z-phase compensation)

Settings when performing master-follower operation (d41 = 2)

	Function code	Setting value	Remarks
P01	Number of motor poles	4	Sets the number of poles for the follower side motor.
d15	Follower pulse (encoder pulse count)	03E8 (hexadecimal format) (1000)	When performing master-follower operation, the pulse count must be the same for the master side and follower side.
d16	(Pulse scaling factor 1)	1	$\frac{d17}{d16} = \frac{1}{S_m \times S_p} = \frac{1}{\frac{1}{5} \times \frac{1}{2}} = \frac{10}{1}$
d17	(Pulse scaling factor 2)	10	
d60	Master pulse (encoder pulse count)	03E8 (hexadecimal format) (1000)	Set the same value as d15.
d62	(Pulse scaling factor 1)	1	$\frac{d63}{d62} = \frac{1}{S_m \times C_p} = \frac{1}{\frac{1}{5} \times \frac{1}{3}} = \frac{15}{1}$
d63	(Pulse scaling factor 2)	15	

Rotational direction

Master side motor rotation direction	Master side PG rotation direction	Follower side PG rotation direction	Follower side run command	
			Forward rotation command (FWD)	Reverse rotation command (REV)
Forward rotation (FWD)	Forward	Forward	Forward	Reverse rotation
Reverse rotation (REV)	Reverse rotation	Reverse rotation	Reverse rotation	Forward

Setting example for master-follower operation without Z-phase compensation (d41 = 2) -(2)-

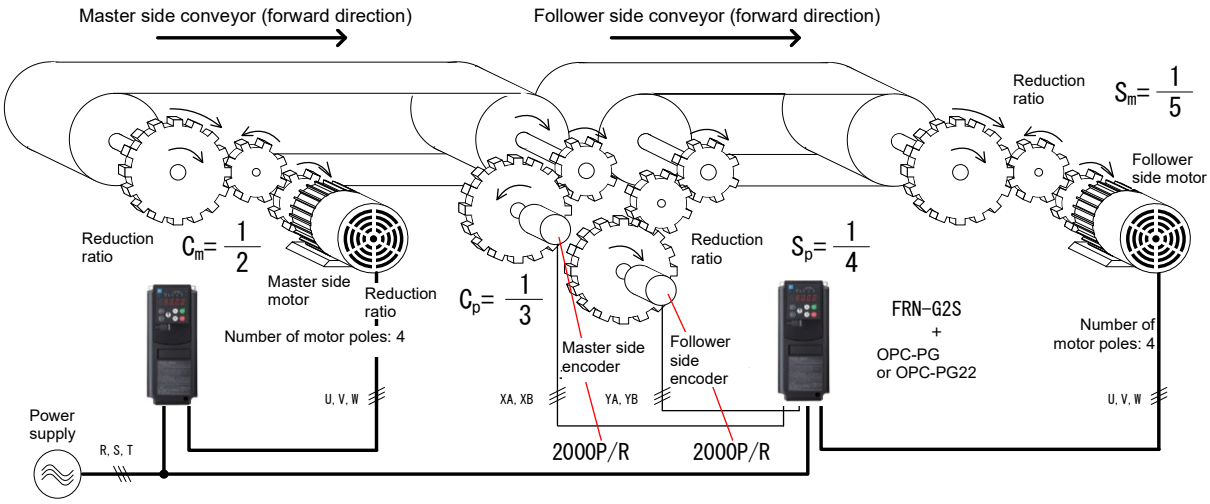

Master-follower operation system configuration example (without Z-phase compensation)

Settings when performing master-follower operation (d41 = 2)

Function code		Setting value	Remarks
P01	Number of motor poles	4	Sets the number of poles for the follower side motor.
d15	Follower pulse (encoder pulse count)	07d0 (hexadecimal format) (2000)	When performing master-follower operation, the pulse count must be the same for the master side and follower side.
d16	(Pulse scaling factor 1)	1	$\frac{d17}{d16} = \frac{1}{S_m \times S_p} = \frac{1}{\frac{1}{5} \times \frac{1}{4}} = \frac{20}{1}$
d17	(Pulse scaling factor 2)	20	
d60	Master pulse (encoder pulse count)	07d0 (hexadecimal format) (2000)	Set the same value as d15.
d62	(Pulse scaling factor 1)	1	$\frac{d63}{d62} = \frac{1}{S_m \times C_p} = \frac{1}{\frac{1}{5} \times \frac{1}{3}} = \frac{15}{1}$
d63	(Pulse scaling factor 2)	15	

Rotational direction

Master side motor rotation direction	Master side PG rotation direction	Follower side PG rotation direction	Follower side run command	
			Forward rotation command (FWD)	Reverse rotation command (REV)
Forward rotation (FWD)	Reverse rotation	Forward rotation	Reverse rotation	Forward rotation
Reverse rotation (REV)	Forward rotation	Reverse rotation	Forward rotation	Reverse rotation

FUNCTION
F Codes
E Codes
C Codes
P Codes
H Codes
A Codes
b Codes
r Codes
J Codes
d Codes
U Codes
y Codes
K Codes

Setting example for master-follower operation with Z-phase compensation (d41 = 3, 4) -(1)-

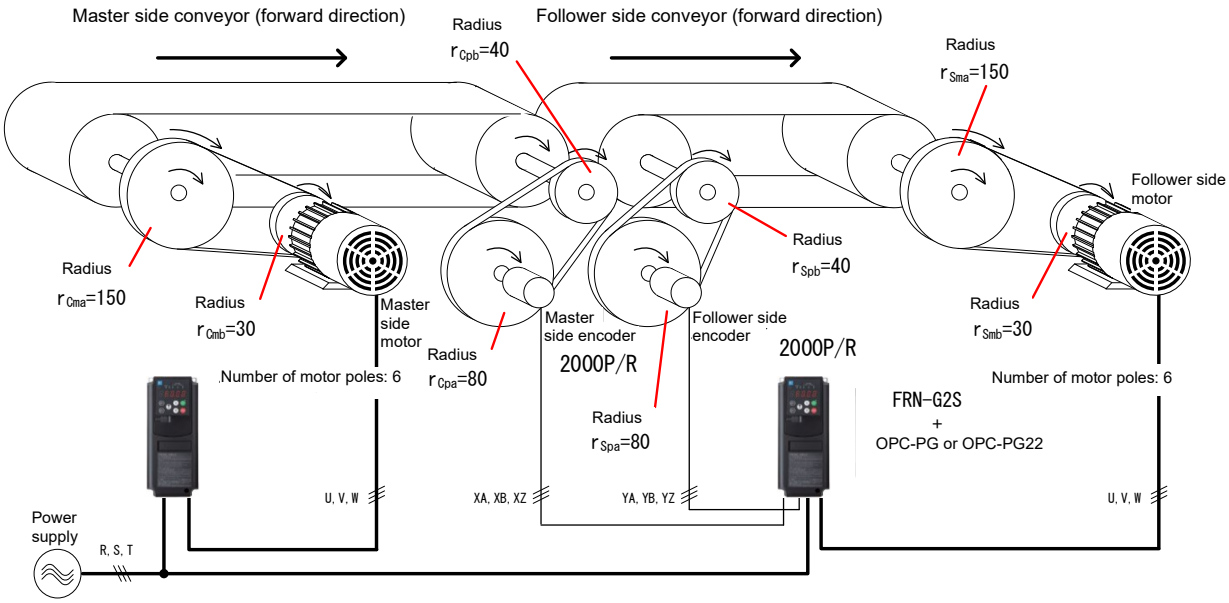

Master-follower operation system configuration example (with Z-phase compensation)

Settings when performing master-follower operation (d41 = 3,4)

Function code		Setting value	Remarks
P01	Number of motor poles	6	Sets the number of poles for the follower side motor.
d15	Follower pulse (encoder pulse count)	07d0 (hexadecimal format) (2000)	When performing master-follower operation, the pulse count must be the same for the master side and follower side.
d16	(Pulse scaling factor 1)	1	Each reduction ratio from the pulley radius is obtained as follows: Follower side motor reduction ratio $S_m=\frac{r_{Smb}}{r_{Sma}}=\frac{30}{150}=\frac{1}{5}$ Follower side encoder reduction ratio $S_p=\frac{r_{Spb}}{r_{Spa}}=\frac{40}{80}=\frac{1}{2}$ d16 and d17 are as follows: $\frac{d17}{d16}=\frac{1}{S_m \times S_p}=\frac{1}{\frac{1}{5}\times\frac{1}{2}}=\frac{10}{1}$
d17	(Pulse scaling factor 2)	10	
d60	Master pulse (encoder pulse count)	07d0 (hexadecimal format) (2000)	Design the machine configuration so that the reduction ratio (synchronized machine shaft - encoder shaft) is the same at the master side and follower side, and set the same values as d15, d16, and d17.
d62	(Pulse scaling factor 1)	1	
d63	(Pulse scaling factor 2)	10	

Rotational direction

Master side motor rotation direction	Master side PG rotation direction	Follower side PG rotation direction	Follower side run command	
			Forward rotation command (FWD)	Reverse rotation command (REV)
Forward rotation (FWD)	Forward rotation	Forward rotation	Forward rotation	Stop
Reverse rotation (REV)	Reverse rotation	Reverse rotation	Stop	Reverse rotation

Setting example for master-follower operation with Z-phase compensation (d41 = 3, 4) -(2)-

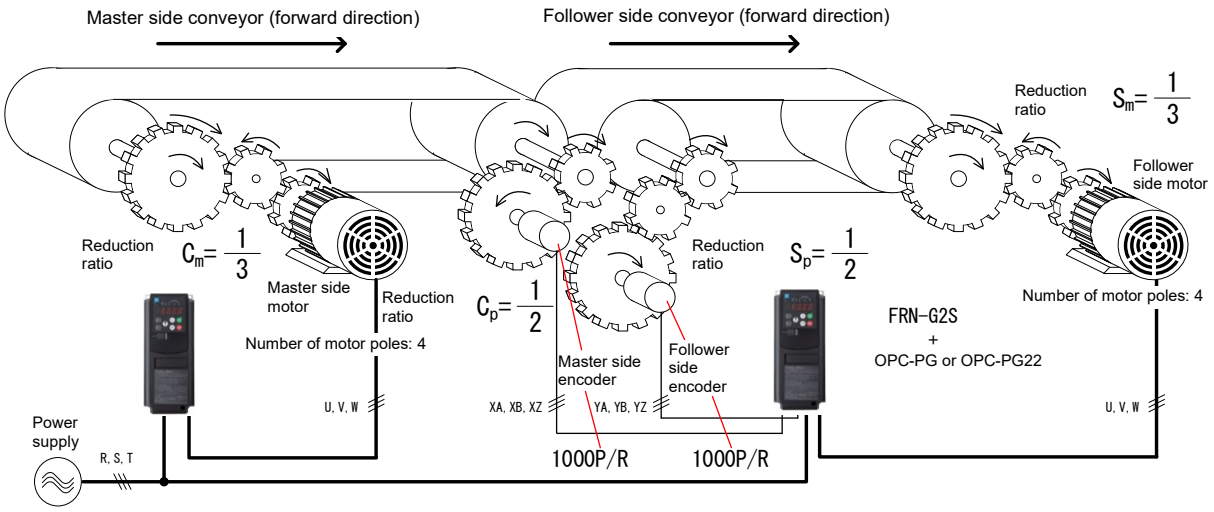

Master-follower operation system configuration example (with Z-phase compensation)

PG connection

Master (command) side connection	Follower (feedback) side connection
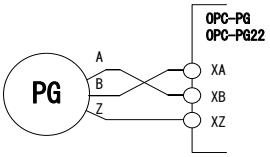	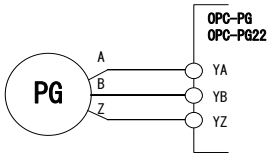

Settings when performing master-follower operation (d41 = 3,4)

Function code		Setting value	Remarks
P01	Number of motor poles	4	Sets the number of poles for the follower side motor.
d15	Follower pulse (encoder pulse count)	03E8 (hexadecimal format) (1000)	When performing master-follower operation, the pulse count must be the same for the master side and follower side.
d16	(Pulse scaling factor 1)	1	$\frac{d17}{d16} = \frac{1}{S_m \times S_p} = \frac{1}{\frac{1}{3} \times \frac{1}{2}} = \frac{6}{1}$
d17	(Pulse scaling factor 2)	6	
d60	Master pulse (encoder pulse count)	03E8 (hexadecimal format) (1000)	Design the machine configuration so that the reduction ratio (synchronized machine shaft - encoder axis) is the same at the master side and follower side, and set the same values as d15, d16, and d17.
d62	(Pulse scaling factor 1)	1	
d63	(Pulse scaling factor 2)	6	

Rotational direction

Master side motor rotation direction	Master side PG rotation direction	Follower side PG rotation direction	Follower side run command	
			Forward rotation command (FWD)	Reverse rotation command (REV)
Forward rotation (FWD)	Reverse rotation	Forward rotation	Forward rotation	Stop
Reverse rotation (REV)	Forward rotation	Reverse rotation	Stop	Reverse rotation

FUNCTION
F Codes
E Codes
C Codes
P Codes
H Codes
A Codes
b Codes
r Codes
J Codes
d Codes
U Codes
y Codes
K Codes

Control block diagrams

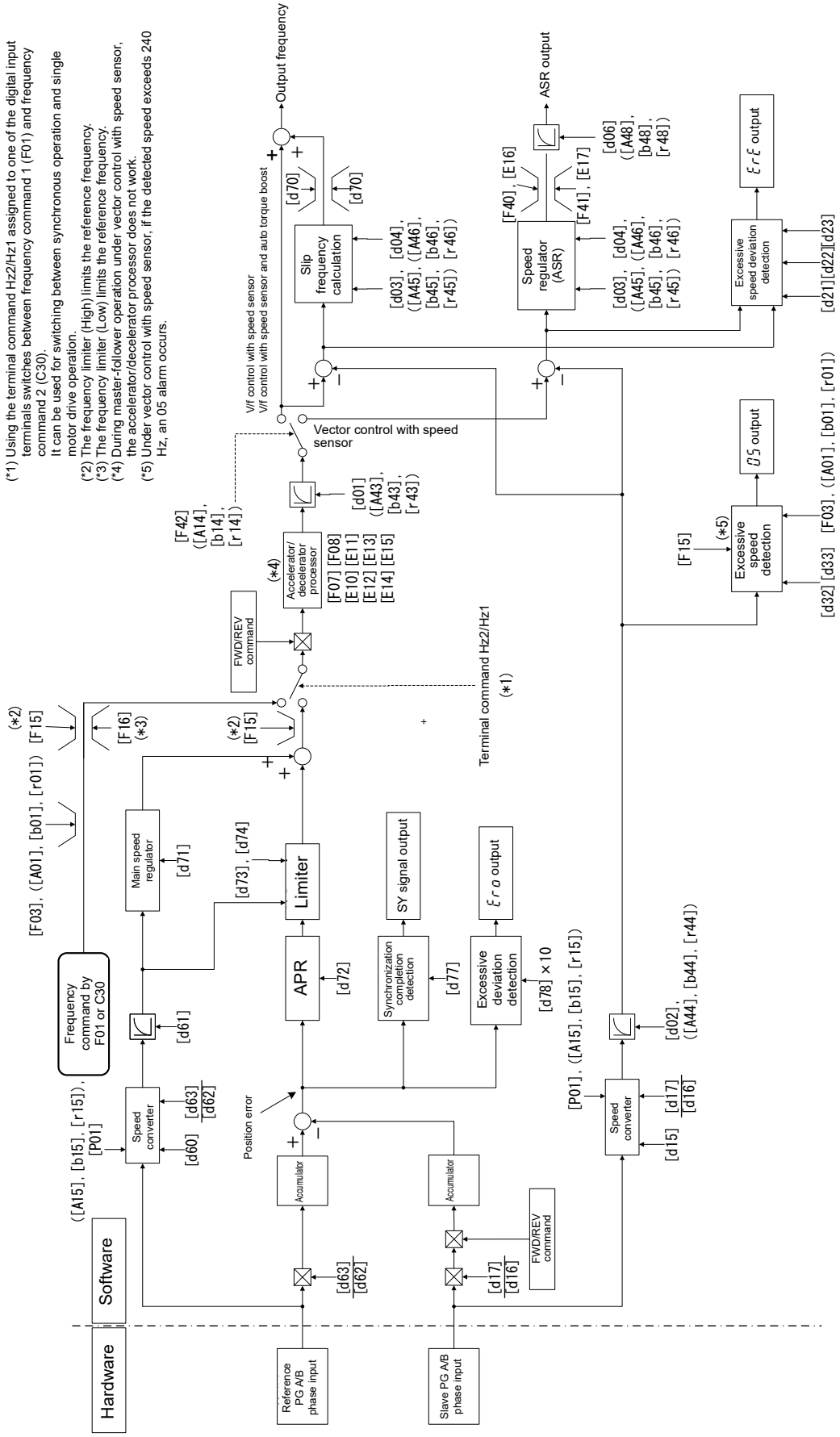

d41 = 2 Master-follower operation without Z-phase compensation control block diagram

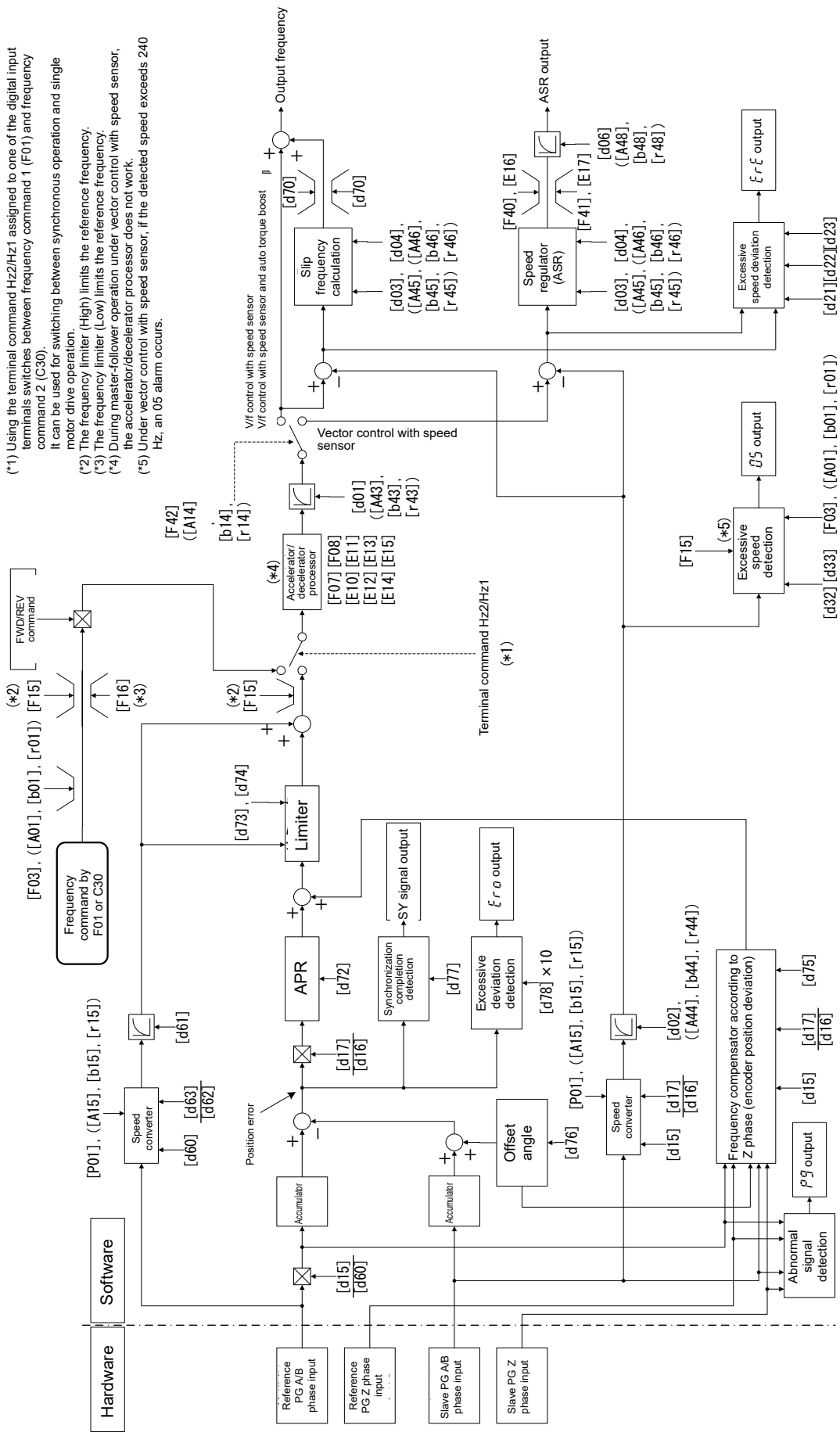

Master-follower operation with Z-phase compensation control block diagram (d41 = 3 or 4)

FUNCTION
F Codes
E Codes
C Codes
P Codes
H Codes
A Codes
b Codes
r Codes
J Codes
d Codes
U Codes
y Codes
K Codes

■ Operation monitor for master-follower operation

The master-follower operation target position, current position, and current deviation (in angle units or pulse units) can be monitored from the keypad. Furthermore, the master-follower operation current control status can be monitored.

Monitor content

Operation monitor content for standard keypad

Standard touch panel	Multi-function keypad TP-A2SW		Item	Unit	Description
LED monitor display	Page No.	Symbol			
3_17	8	E	Target position pulse (master-follower operation)	Pulse	Displays the target position pulse count (master side position).
3_18	8	P	Current position pulse (master-follower operation)	Pulse	Displays the current position pulse count (follower side position).
3_19	8	dp	Current deviation pulse (master-follower operation)	Pulse	Displays the current position deviation pulse count.
3_20	8	MODE	Control status monitor (master-follower operation)	-	Displays the current control status. Refer to the following master-follower operation status for details.
3_26	8	SY-d	Position deviation (master-follower operation)	deg	Displays the current angle deviation.

Displaying system on the LED monitor

The pulse count range from -9,999,999 pulses to +9,999,999 pulses is handled at the standard keypad operation monitor pulse count display. To display it, the 4-digit LED monitor shows alternately the upper and lower four digits for one second and three seconds, respectively.

The display repeatedly alternates between higher order digits 1 sec → 4 lower order digits 3 sec → higher order digits 1 sec → 4 lower order digits 3 sec → ...

Multi-function keypad TP-A2SW displays all digits simultaneously.

Displaying system for pulse count

Pulse count	LED monitor at standard keypad, multi-function keypad, operation monitor at standard keypad		Remarks
	4 higher order digits	4 lower order digits	
+9,999,999	+999	9999.	Maximum display value
+19,999	+1	9999.	High order at 0
+10,000	+1	0000.	Digits are not filled in.
+9,999	+0	9999.	
+10	+0	0010.	
0	0	0000.	
-10	-0	0000.	
-9,999	-0	9999.	
-10,000	-1	0000.	
-19,999	-1	9999.	
-9,999,999	-999	9999.	Minimum display value

Master-follower operation status

With master-follower operation, the running status can be monitored. The following diagram and table show a status example.

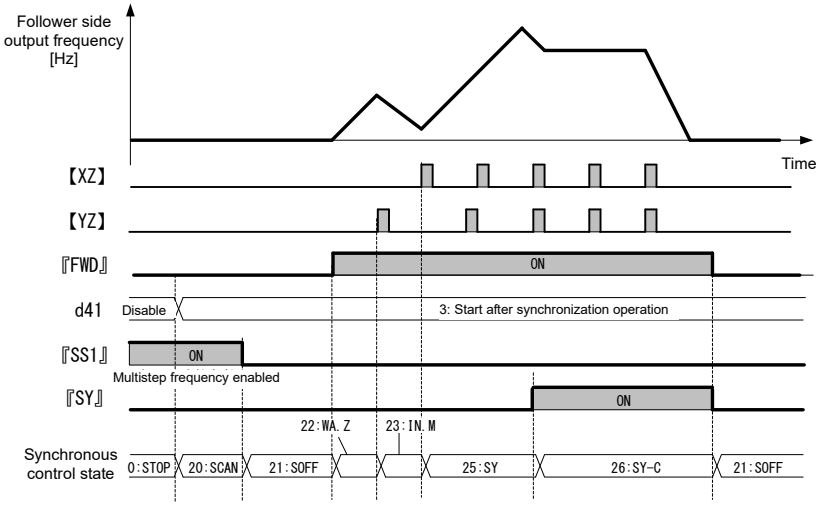

Master-follower operation status

Master-follower operation status

Master-follower operation status	Status Name*1	Status No.*2	Description
Master-follower operation disable	STOP	0	With the function code set, master-follower operation is not selected. If **d41** is set to “Master-follower operation: 2 to 4”, and **F01** or **C30** is set to “Pulse train command: 12”, the setting changes to “Master-follower operation stop: 21”.
Master-follower operation cancel	SCAN	20	Master-follower operation output is not enabled for reasons such as PID control being enabled, or torque control being enabled.
Master-follower operation stop	SOFF	21	The run command has not been input. If the run command is ON, and operation is being performed with Z-phase compensation, if operation is performed without Z-phase compensation for “22: Waiting Z-phase detection”, the setting changes to “26: Synchronization complete”.
Awaiting Z-phase detection	WA.Z	22	The Z-phase has not been detected for either the master or the follower side.
Master side Z-phase detection	IN.M	23	The master side Z-phase is detected, and the system is waiting on the follower side Z-phase to be detected.
Follower side Z-phase detection	IN.S	24	The follower side Z-phase is detected, and the system is waiting on the master side Z-phase to be detected.
During master-follower operation	SY	25	Displays the during master-follower operation status. However, the position deviation does not converge within the synchronization complete detection width.
During master-follower operation (synchronization complete)	SY-C	26	Displays the synchronization complete status. Outputs output terminal function “SY".

*1: The status name can be referenced in the “Drive Monitoring” menu on the LCD monitor of multi-function keypad TP-A2SW.

*2: The status number can be referenced in Menu 3_20 “Drive Monitoring” on the LCD monitor of multi-function keypad TP-A2SW.

Alarm protective function

If the inverter protective function is triggered and an alarm occurs, an alarm code appears on the keypad LED monitor, and inverter output is shut off. As a result, the motor will coast to a stop.

Alarms relating to this option are shown in the following "List of option related alarms".
Refer to Chapter 6 “6.3.2 Causes, checks and measures of alarms” for details.

List of option related alarms

Alarm code	Alarm name	Function for which alarm occurred	
		Master-follower operation (without Z-phase compensation)	Master-follower operation (with Z-phase compensation)
OS	Overspeed protection	A	A
ErE	Speed mismatch/excessive speed deviation	Y	Y
Ero	Deviation overflow alarm	A	A
PG*1	PG wire break detection alarm	-	A

*1 This alarm occurs if the follower side PG Z-phase detection is as follows during master-follower operation.

- If the Z-phase for 2 rotations or more is not detected since the last Z-phase detection.
- The Z-phase for 2 rotations or more has not been detected since the last Z-phase wire break detection alarm occurred.

The alarm subcode can be used to determine whether a master side Z-phase wire break or follower side Z-phase wire break has occurred.

Alarm subcode 10	Master side Z-phase wire break
Alarm subcode 11	Follower side Z-phase wire break

A: When the function is selected, a beneficial alarm is always displayed.

Y: Provided that the function is selected, and a function code that enables the alarm function is set, an alarm indicating that the alarm protective function will be enabled is displayed. The alarm protective function is enabled by factory default.

-: When the function is selected, an unrelated alarm is displayed.

■ **Unavailable function codes**

During master-follower operation, the following functions are not available.

F16	Frequency Limiter (Low)
C01 to C04	Jump frequency

Selecting “Vector control for induction motor with speed sensor” (**F42** = 6) disables the settings of the following functions during master-follower operation, as well as making the above functions unavailable.

F07, F08	Acceleration Time 1/Deceleration Time 1
E10, E11	Acceleration Time 2/Deceleration Time 2
E13, E14	Acceleration Time 3/Deceleration Time 3
E15, E16	Acceleration Time 4/Deceleration Time 4
F24	Starting frequency (Holding time)
F39	Stop frequency (Holding time)

During master-follower operation, the following control should be disabled (H18 = 0, J01 = 0).

H18	Torque control	
J01	PID control	
J101	PID control 1	*101
J102	PID control 2	*101

To perform master-follower operation, be sure to select a control mode with speed sensor (**F42** = 3, 4 or 6) and configure the function codes given in this section. Set other function codes based on the following function code setting procedure.

*101: Supported with ROM0500 or later.

FUNCTION
F Codes
E Codes
C Codes
P Codes
H Codes
A Codes
b Codes
r Codes
J Codes
d Codes
U Codes
y Codes
K Codes

d80	Motor 1 (Synchronous motor magnetic pole position draw-in frequency) Related function code: P30 Motor 1 (Synchronous motors, Magnetic pole position detection mode)

Under vector control with PM sensor, if using an encoder with A/B-phase and Z-phase output, the magnetic pole position will be unknown immediately after turning ON the power, and therefore magnetic pole position draw-in operation is performed at the frequency set at d80 until the Z-phase is detected. After the Z-phase is detected, the magnetic pole position based on the magnetic pole position sensor offset set in P95 is established, and operation switches to normal operation.

Basically, there is no need to modify the setting.

Data setting range:0.1 to 10.0 Hz

d82 d83	Magnetic flux weakening control (Speed sensorless vector control) Magnetic flux weakening lower limit (Speed sensorless vector control)

By setting d82 to “1” (enable), the motor magnetic flux is controlled based on the command torque. If the command torque is low, the motor magnetic flux is weakened with d83 as the lower limit, and control stability is improved.

Set the magnetic flux weakening lower limit in % units at d83. If the value is too small, problems such as hunting or speed stagnation may occur. As long as there are no problems, use with the factory default.

d86	Acceleration/deceleration output filter

This code is described in detail at the F07 item.

d89	Motor 1 (Synchronous motor high-efficiency control)

High-efficiency synchronous motor control is performed with motor constants. If wishing to run a synchronous motor without knowing the motor constants, or when unable to perform rotation tuning, operation may be possible by disabling high-efficiency control.

Setting value	Synchronous motor high-efficiency control
0	Disable
1	Enable

d90	Magnetic flux level during deceleration

This code is described in detail at the H71 item.

d79, d81 d84, d85 d88 d93 to d97	For adjustment by manufacturer

These function codes are for adjustment by the manufacturer. Unless otherwise specified, do not access these function codes.

d91, d92, d98	For special adjustment

These function codes are reserved for special adjustment. There is normally no need to change these codes.

d99	Extension function 1

To enable the jogging operation “JOG” from communication, set bit 3=1 for this function.

d99 data can be changed using the "STOP key + ▲ key", or "STOP key + ▼ key" double operation.

Note Bits other than bit 3 of this function code are reserved bits. Do not access these function codes.

FUNCTION
F Codes
E Codes
C Codes
P Codes
H Codes
A Codes
b Codes
r Codes
J Codes
d Codes
U Codes
y Codes
K Codes

5.3.16 d1 codes (Applied functions 2)

d120 to d125	**For brake signal reverse rotation** **(Discharge current, Discharge frequency/speed, Discharge timer, Discharge torque, ON frequency/speed, ON timer)**

These codes are described in detail at the J68 item.

d150, **d151**	**PID control (Dancer upper limit warning position)** **(Dancer lower limit warning position)**

This code is described in detail at the J57 item.

d152	**PID control (Line speed lower limit for dancer PID output)** **Related function codes:** **J01 PID control (Operation selection)** **J62 PID Control (PID control block selection)**

If PID control (PID control block selection) J62 bit 1 = 0 (ratio control), PID regulator output compensates the line speed setting as a ratio for the line speed setting (main setting). Consequently, if low speed is specified for the line speed setting, the amount compensated by PID control will also be proportionately low, and the length of time until the dancer returns to the reference position (J57 position) will become longer. Even if low speed is specified for the line speed setting, by setting d152 to other than 0.0 Hz, and setting a lower limit, the amount compensated by the PID regulator can be adjusted so that it is not too small.

- Data setting range: 0.0 to 599.0 (Hz)

d153	**Constant surface speed control (Line speed compensation gain)** **Related function codes:** **d41 (Application control selection)** **E50 (Speed display coefficient function code)**

By using the winding diameter calculation function, constant surface (line speed) speed control can be performed even if the winding diameter ratio changes significantly. This gain is used to further compensate the result of converting the inverter setting frequency to line speed.
LED monitor details (Speed monitor selection) If the line speed is set with E48 = 5, the line speed can be provided from the keypad. In this case, the line speed [m/min] = setting frequency [Hz] x E50 x d153.

- Data setting range: 0.0 to 200.0(%)

📖 Refer to the LED monitor (display selection) function code E43, LED monitor (stoppage display) function code E44, LED monitor details (Speed monitor selection) function code E48, and Display coefficient for speed monitor function code E50 for details on the line speed setting and monitor.

d154	Constant surface speed control (Selector switch) Related function codes: d41 (Application control selection) J01 PID control (Operation selection)

By using winding diameter calculation, constant surface (line speed) speed control can be performed even if the roll winding diameter ratio changes significantly. If using winding diameter calculation, set d154 to 1.

- Data setting range: 0 to 1

Bit 0: Winding diameter compensation	0: Disable	Disables winding diameter calculation, and runs the inverter at the frequency setting from the host controller. The frequency setting for which winding diameter compensation was performed at the host controller is used.
	1: Enable	Enables winding diameter calculation, and runs the inverter with the frequency command for which compensation was performed with the winding diameter calculated by the inverter. The line speed setting is used for the inverter.

d158 to d166	Winding diameter calculation Related function codes: d41 (Application control selection) J01 PID control (Operation selection)

Calculates the roll winding diameter for constant surface speed control from the peripheral speed (line speed) setting and roll rotation speed, compensates the output frequency even if the roll winding diameter changes, and controls the speed so that the peripheral speed (line speed) remains constant when winding and unwinding.
Winding diameter calculation is valid only when PID control for dancer control is enabled (J01 = 3).

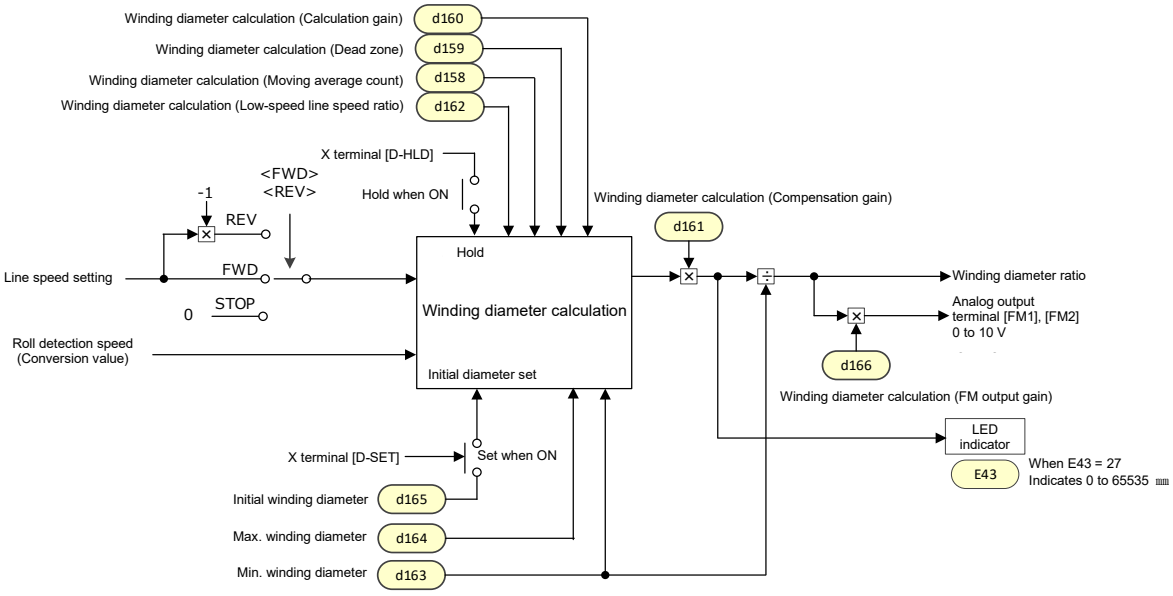

d158, d159	Winding diameter calculation (Moving average count) Winding diameter calculation (Dead zone) Related function code: d41 (Application control selection)

■ **d158 Winding diameter calculation (Moving average count)**

If there are fluctuations in the line speed setting or roll section detected speed, these can be smoothed with a moving average filter. Set the moving average count in d158.

- Data setting range: 0 to 100 (times)

■ **d159 (Winding diameter calculation (Dead zone)**

If the difference between the roll section detected speed x winding diameter calculated value and the line speed setting is low, the winding diameter calculation value can be held. Set the ratio to line speed setting as the dead zone width in d159.

- Data setting range: 0.000 to 10.000(%)

d160	Winding diameter (Calculation gain) Related function code: d41 (Application control selection)

Calculates the roll winding diameter calculation to obtains the relationship roll section detected speed x winding diameter calculation value = line speed setting.

The winding diameter calculation compensation time can be adjusted with the calculation gain. If the winding diameter rate of change is low, and the winding diameter is small, set a small value for d160 if the detected speed is easily affected, allowing the impact on the calculation to be minimized.

- Data setting range: 0.00 to 1.00

d161	Winding diameter calculation (Compensation gain) Related function code: d41 (Application control selection)

If there is an error between the actual machine and function code such as the reduction ratio set for the inverter, an error will also occur in the winding diameter calculation. Adjust if compensating by setting the inverter winding diameter calculation value to the same as the actual value.

- Data setting range: 0.000 to 10.000

d162	Winding diameter calculation (Low-speed line speed ratio) Related function code: d41 (Application control selection)

If the line speed setting is low, this holds the winding diameter calculation value to stabilize the motor speed.

Set the line speed for holding the winding diameter calculation value at the ratio to the maximum speed.

- Data setting range: 0.00 to 100.00(%)

d163 to d165	Winding diameter calculation (Minimum winding diameter, Maximum winding diameter, Initial winding diameter) Related function code: d41 (Application control selection)

Set the minimum winding diameter d163 which acts as the reference for the winding diameter calculation, the maximum winding diameter d164 which is the winding diameter calculation upper limit, and the initial diameter d165 set when setting the initial winding diameter. All of these items are set in mm.

The upper limit for winding diameter calculation is 100 times the maximum diameter d163/minimum diameter d164.

- Data setting range: 1 to 65535 (mm)

Note The winding diameter calculation is not memorized when the inverter power is turned OFF. By stopping the machine during winding/unwinding, and turning the inverter power OFF, the value returns to the initial winding diameter when the power is turned ON again. To set the initial winding diameter as the winding diameter when the inverter power is turned OFF, record the winding diameter at the host controller, and set this for d165 when the power is turned ON again.

■ Initial diameter set command “D-SET”(Function codes E01 to E09, data = 169)

By setting the initial winding diameter d165, and turning ON the initial position set command “D-SET” (E01 to E09: 169), the winding diameter calculation can be initialized.

“D-SET”	Function
OFF	Disable
ON	Enable (Initializes the winding diameter calculation value with initial winding diameter d165)

■ Winding diameter calculation hold command “D-HLD” (Function codes E01 to E09, data = 170)

By turning ON the winding diameter calculation hold command “D-HLD” signal during constant surface speed control, updating of the winding diameter calculation result is canceled. The inverter setting frequency is calculated from the winding diameter calculation value and line speed setting when the winding diameter calculation hold command “D-HLD” signal is ON.

“D-HLD”	Function
OFF	Disable
ON	Enable (Holds the winding diameter calculation value.)

FUNCTION
F Codes
E Codes
C Codes
P Codes
H Codes
A Codes
b Codes
r Codes
J Codes
d Codes
U Codes
y Codes
K Codes

d166	Winding diameter calculation (FM output gain) Related function code: d41 (Application control selection)

If monitoring the winding diameter ratio in the 0 to 10 [V] range with analog outputs (terminal [FM1], [FM2]), this adjustment gain sets how many times the winding ratio with respect to the minimum winding diameter ratio to output the 10 [V].

- Data setting range: 0.0 to 100.0

Example:

If outputting 4.0 times the winding diameter ratio with respect to the minimum winding diameter d164 setting value as 10 [V], set d166 = 4.0, and if outputting 10.0 times the winding diameter ratio as 10 [V], set d166 = 10.0.

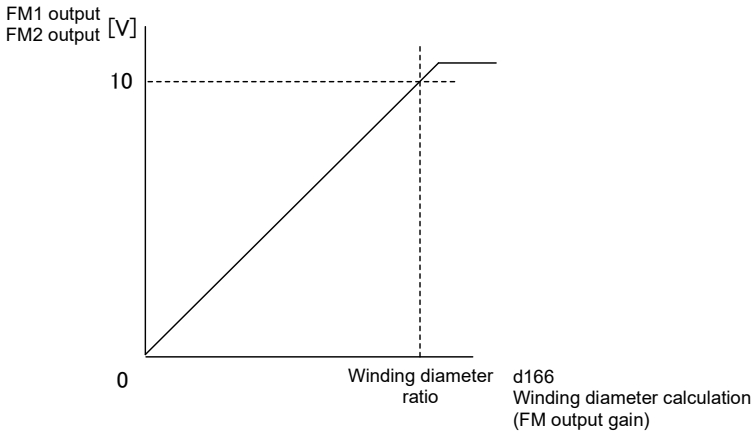

If outputting the winding diameter ratio to terminal [FM1] and [FM1], set 25 for function code F31 and F61, respectively. The gain can be adjusted even with function code F30 and F60 for terminal [FM1] and [FM2] side.

d167 to d169	Maximum line speed Line speed command (Acceleration time, Deceleration time) Related function code: J01 PID control (Operation selection)

If performing PID control for dancer control, the PID output will be the frequency setting, and therefore acceleration/deceleration time 1 to 4 (F07, F08, etc.) will apply. Acceleration/deceleration time 1 to 4 is normally set to 0.00 (s), and therefore by using the main settings in step form, the output frequency will also change to step form.

Even if the main settings are used in step form, set the respective acceleration time and deceleration time for d168 and d169 to allow acceleration and deceleration to be performed for the set acceleration/deceleration time for PID control for dancer control.

■ d167 Maximum line speed

Sets the maximum value for the line speed. This setting is used to limit the line speed command (acceleration/deceleration time) d168/d169 settings and setting values.

- Data setting range: 0.0 to 6553.5 (m/min)

■ d168 Line speed command (Acceleration time)

Sets the time that the machine shaft (line speed axis) accelerates from 0 [m/min] to the maximum line speed (d169) setting value [m/min].

■ d169 Line speed command (Deceleration time)

Sets the time that the machine shaft (line speed axis) decelerates from the maximum line speed (d169) setting value [m/min] to 0 [m/min].

• Data setting range: 0.00 to 6000 (s)

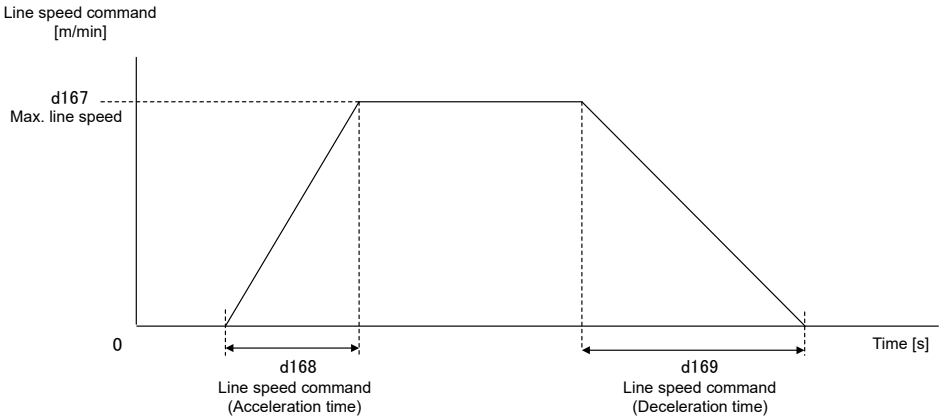

FUNCTION
F Codes
E Codes
C Codes
P Codes
H Codes
A Codes
b Codes
r Codes
J Codes
d Codes
U Codes
y Codes
K Codes

[1] Hoist function

d170 to d189	Hoist function

The inverter is equipped with a convenient function for application for motors used to wind hoists.

Name	Description	Function code
Load detection function	The hoisted load can be estimated, and monitoring is possible.	d170 to d174
Light load automatic double speed operation function	This function increases the winding and lower speed for light suspended loads, improving the hoist work efficiency.	d175 to d185, d189
Overload stop function	This function prohibits winding if the suspended load is a heavy object.	d186 to d188

With the hoist function, hoisting is performed with forward rotation, and lowering is performed with reverse rotation.

■ Load detection function

The torque is proportional to the load while moving at constant speed, and therefore the torque calculation value (torque command value) is compensated using the gain and an offset to detect the load. On systems with no counterweight, drive operation is applied for hoisting, and braking operation is applied for lowering, and therefore a separate gain and offset has been set for hoisting and lowering.

Function code

Function code	Name	Data setting range	Remarks
d170	After detected load compensation (dedicated monitor function code)	-327.68 to 327.67%	
d171	Load conversion gain (hoisting)	0.00 to 200.00%	
d172	Load conversion offset (hoisting)	-100.0 to 100.0%	
d173	Load conversion gain (lowering)	0.00 to 200.00%	
d174	Load conversion offset (lowering)	-100.0 to 100.0%	

Conversion formula

Enable	Conversion formula
Hoisting	$d170[\%]=\frac{d171}{100}\times(\text{Torque calculation value }[\%]+d172)$
Lowering	$d170[\%]=\frac{d173}{100}\times(\text{Torque calculation value }[\%]+d174)$

Gain, offset derivation

The factory default values for gain and the offset are 100% and 0%, respectively, and d170 displays the torque calculation values. In this condition, the d170 monitor value when hoisting at constant speed with no load is defined as T_0%. Furthermore, the d170 monitor value when hoisting the rated load at constant speed with no load is defined as T_1%. The detected load is 100% at T_1, and the detected load is 0% at T_0. The offset and gain can be calculated with the following formula. The same applies to lowering.

d171,d173: gain $[\%]=\frac{100}{T_1-T_0}$

d172, d174: offset $[\%]=-T_0$

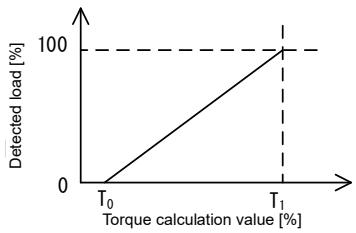

■ Light load automatic double speed operation function

This function increases the speed to improve work efficiency when the load is light.

By turning ON digital input “LAC-ENB”, automatically double speed operation is enabled. By setting a light load detection level and heavy load detection level, loads are distinguished in 3 levels (light load < medium load < heavy load), and with light and medium loads, the motor runs at higher than the set frequency at the double speed rate. Digital output “LAC” indicating that the motor is running at double speed turns ON at this time. However, double speed operation is not performed if the set frequency is equal to or higher than the base frequency. With heavy loads, the motor runs at the set frequency. By setting 999 for the double speed rate, the speed at which the motor runs is automatically calculated from the load and a safety factor. In the interests of safety, adjustment of the load detection function gain and offset (d171 to d174) must be complete to use this function.

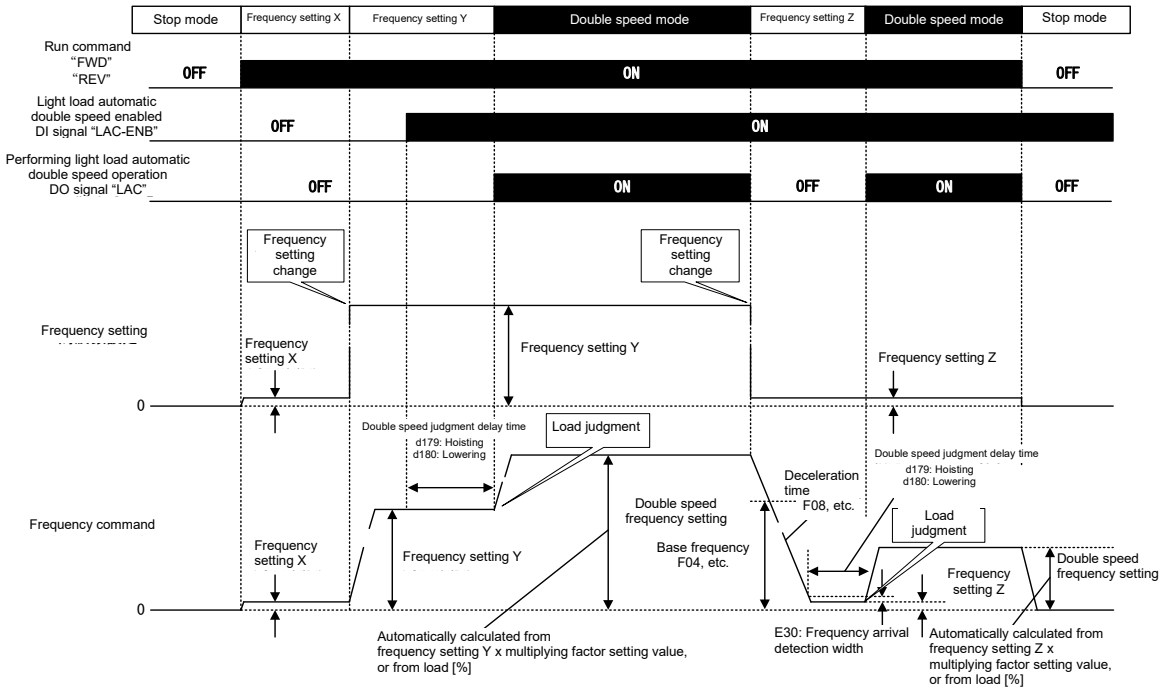

Function code

Function code	Name	Data setting range	Remarks
E01 to E09, E98, E99	Terminal [X1] to [X9] (Function selection) Terminal [FWD] (Function selection) Terminal [REV] (Function selection)	105 (1105): Light load automatic double speed judgment permission “LAC-ENB”	
E20 to E24, E27	Terminal [Y1] to [Y4] (Function selection) Terminal [Y5A/C] (Function selection) Terminal [30A/B/C] (Function selection)	159 (1159): Performing light load automatic double speed operation “LAC”	
d175	Light load speed multiplying factor (hoisting)	100.0 to 300.0%, 999 (automatic)	
d176	Light load speed multiplying factor (lowering)	100.0 to 300.0%, 999 (automatic)	
d177	Medium load speed multiplying factor (hoisting)	100.0 to 300.0%, 999 (automatic)	
d178	Medium load speed multiplying factor (lowering)	100.0 to 300.0%, 999 (automatic)	
d179	Speed multiplying factor safety factor	1.0 to 4.0	
d180	Load judgment delay time (hoisting)	0.00 to 10.00 s	
d181	Load judgment delay time (lowering)	0.00 to 10.00 s	
d182	Light load detection level (hoisting)	5.0 to 100.0%, 999 (disable)	
d183	Light load detection level (lowering)	5.0 to 100.0%, 999 (disable)	
d184	Heavy load detection level (hoisting)	5.0 to 100.0%, 999 (disable)	
d185	Heavy load detection level (lowering)	5.0 to 100.0%, 999 (disable)	

FUNCTION
F Codes
E Codes
C Codes
P Codes
H Codes
A Codes
b Codes
r Codes
J Codes
d Codes
U Codes
y Codes
K Codes

Function code	Name	Data setting range	Remarks
d189	Hoist function auxiliary settings	0000H to 00FFH (hexadecimal format) Bit 0: Medium load speed multiplying factor selection 0: Fixed multiplying factor, 1: Proportional to load	

Operation details

If operation is started, the set frequency is reached, and light load automatic double speed judgment permission "LAC-ENB" is ON after load judgment delay time d180 and d181 have elapsed, load judgment is performed, and the mode changes to double speed mode. Loads are classified into light load, medium load, and heavy load with light load detection level d182 and d183, and heavy load detection level d184 and d185 for load judgment, and double speed operation can be performed for light loads and medium loads.

■ **Light load automatic double speed judgment permission "LAC-ENB" assignment (Function code data = 105)**

This is a permission command used to perform load judgment for automatic double speed operation for light loads. Load judgment is performed while the motor is running at constant speed, and therefore this signal should be turned ON before and after reaching the set frequency. If this signal is not assigned, load judgment is not performed even if the setting conditions are established for a light load. If this signal is ON while the motor is running at constant speed, and light load judgment delay time d180 and d181 have elapsed, load judgment is performed. If the detected load is smaller than heavy load detection level d184 and d185 when performing load judgment, the mode changes to double speed mode.

Double speed mode is ended when "LAC-ENB" turns OFF, or the set frequency is changed, and the motor decelerates to the set frequency in the deceleration time.

Load type and speed multiplying factor

Load type	Type condition		Speed multiplying factor *1	
	Hoisting	Lowering	Hoisting	Lowering
Light load	0[%] ≤ load ≤ d182	0[%] ≤ load ≤ d183	d175	d176
Medium load	d182 < load ≤ d184	d183 < load ≤ d185	d175, d177, automatically calculated based on load*2	d176, d178, automatically calculated based on load*2
Heavy load	d184 < load	d185 < load	100[%]	100[%]

Load type speed multiplying factor (if heavy load detection level = 999 (disable))

Load type	Type condition		Speed multiplying factor *1	
	Hoisting	Lowering	Hoisting	Lowering
Light load	0[%] ≤ load ≤ d182	0[%] ≤ load ≤ d183	d175	d176
Heavy load	d182 < load	d183 < load	100[%]	100[%]

■ **Performing light load automatic double speed operation "LAC" assignment (Function code data = 159)**

By assigning this signal to a digital output, the inverter is able to monitor that the motor is performing double speed operation. This signal turns ON when in double speed mode, and turns OFF when double speed mode ends.

■ Speed multiplying factor safety factor

If using the motor with a frequency higher than the base frequency, the motor will run with fixed output characteristics, and therefore the output torque will decrease.
The maximum frequency at which the output torque can rise is calculated as the torque reduction characteristic equal to or higher than the base frequency,

$$\textbf{Reduction torque} = \frac{\textbf{Base frequency}}{\textbf{Operating frequency}} \textbf{ x Motor rated torque}$$

but since the actual reduction torque is dependent on the motor, the torque may become lower than the reduction torque mentioned above. In a case such as this, setting the safety factor in d179, and reducing the maximum frequency at which the output torque can rise prevents loads falling due to insufficient output torque.

■ Hoist function auxiliary setting

It is possible to select whether to set the double speed rate when moving medium loads to a fixed value, or to set the double speed rate proportional to the load with bit 0.
Bits 1 to 7 are for use by the manufacturer, and should not be changed.

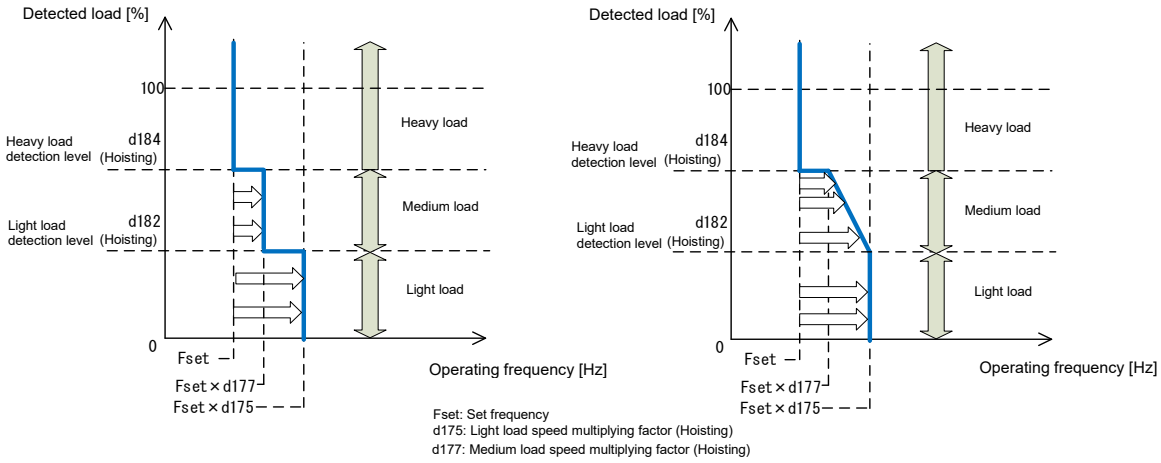

Bit 0: Medium load speed multiplying factor selection (0: Fixed multiplying factor)

Bit 0: Medium load speed multiplying factor selection (1: Proportional to load)

If 1 (proportional to load) is selected at bit 0, refer to the following diagram for the double speed rate.

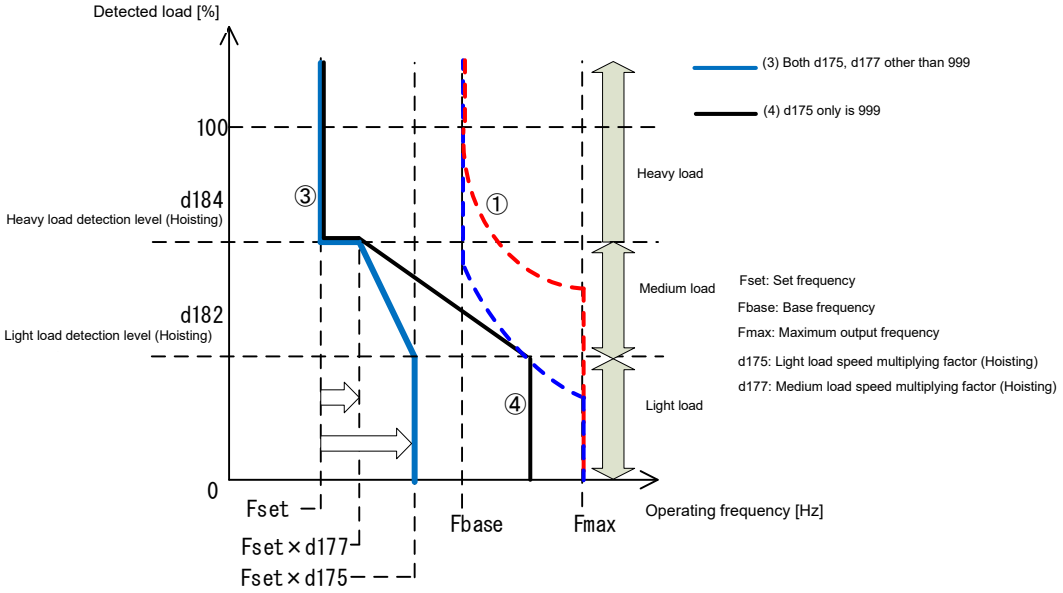

FUNCTION
F Codes
E Codes
C Codes
P Codes
H Codes
A Codes
b Codes
r Codes
J Codes
d Codes
U Codes
y Codes
K Codes

(Note 1) The operating frequency multiplied by the double speed rate is always limited to the “maximum frequency at which the output torque can rise” ((1) in figure).

(Note 2) The double speed rate in the medium load area is the multiplying factor obtained through linear interpolation from the medium load double speed rate to the light load double speed rate. ((3) in figure) If 999 is set for the double speed rate (d175 or d176) only, the multiplying factor obtained through linear interpolation to the double speed rate determined by “maximum frequency at which the output torque can rise ÷ safety factor” equivalent to the light load detection level (d182, d183) is used. ((4) in figure)

(Note 3) If set with the light load detection level (d182, d183) ≥ heavy load detection level (d184, d185), the setting will be disabled (equivalent to double speed rate of 100%) in the same way as when the medium load area is set to 999.

(Note 4) By setting the double speed rate to 999 for both light and medium loads, the setting will be automatically calculated so that the motor is run at the “maximum frequency at which the output torque can rise ÷ safety factor” ((2) automatic operating frequency in figure) in all areas from the output torque based on the motor rated torque and the safety factor (d179). The lower limit for the automatic operating frequency is the base frequency.

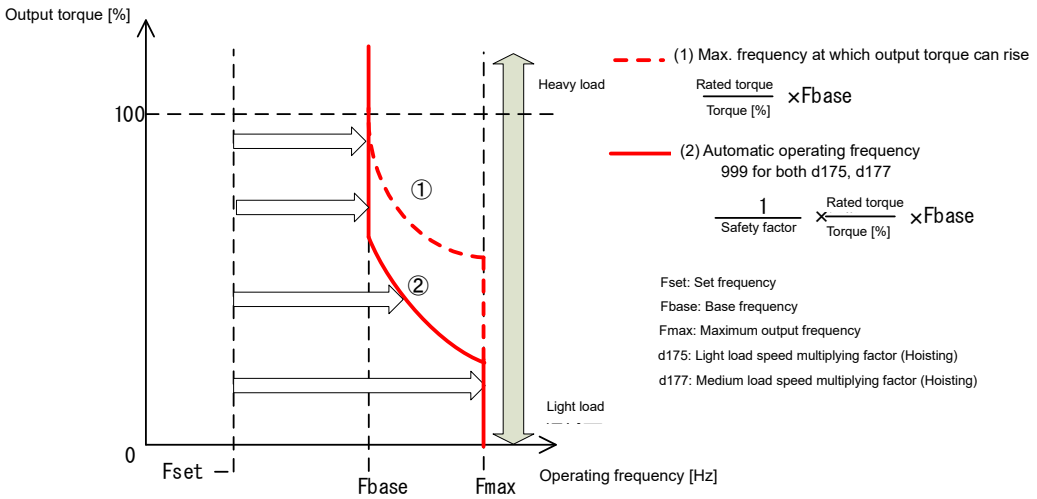

■ Overload stop function

Load judgment is performed when the judgment delay time after reaching speed (d186) is passed when hoisting (FWD), and operation is stopped due to an overload if the overload detection level (d187) is exceeded. It is recommended that judgment be based on the low speed frequency to ensure that overloads can be detected when hoisting grounded loads.

Digital output "LLIM" is turned ON at the same time as the overload is detected, and "E-Ld" is displayed on the keypad. If lowering (REV) is possible, and the REV command is turned OFF after the load has been lowered to the floor, "LLIM" turns OFF, and "E-Ld" disappears. In the interests of safety, adjustment of the load detection function gain and offset (d171 to d174) must be complete to use this function.

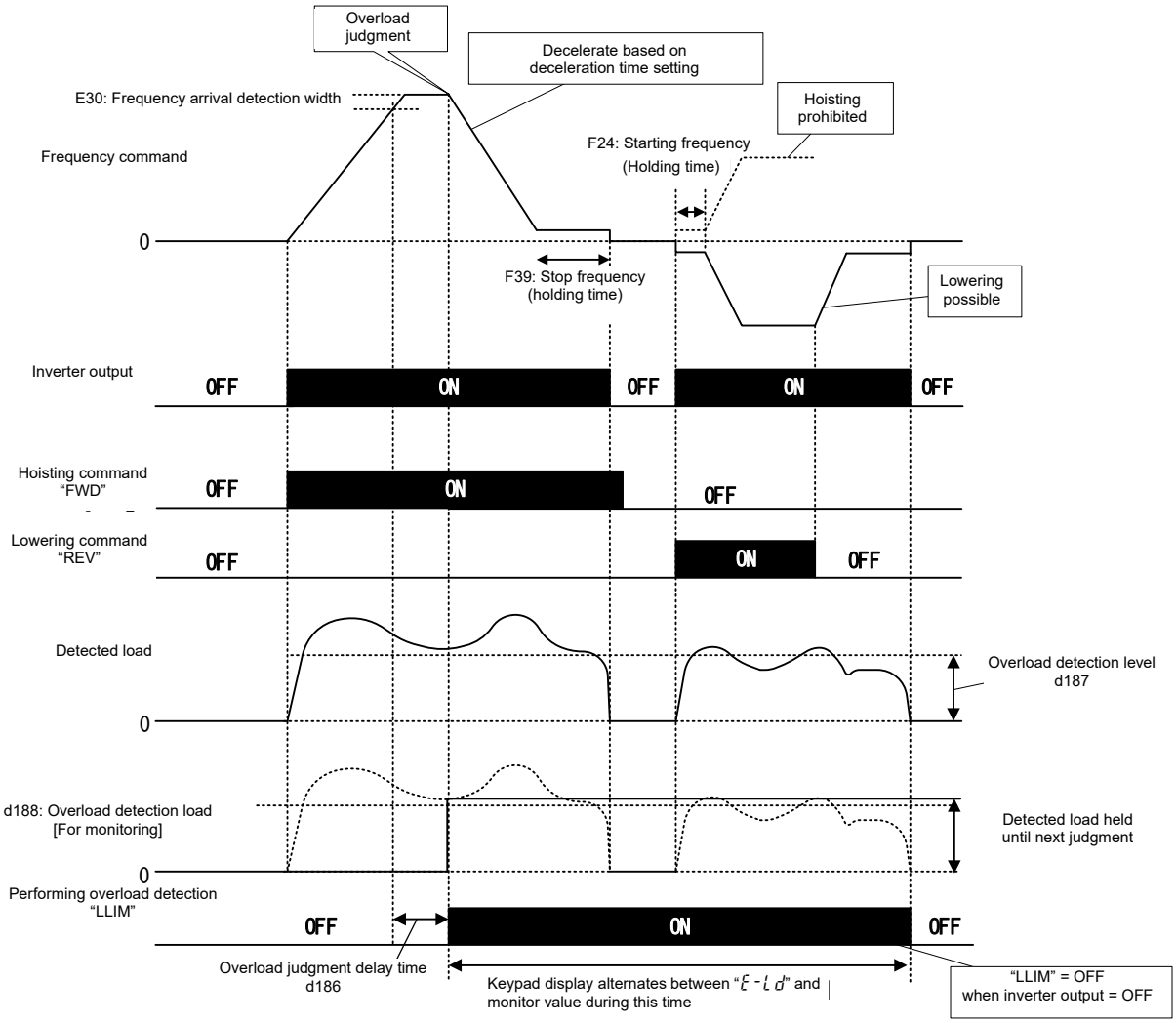

Function code

Function code	Name	Data setting range	Remarks
E20 to E24, E27	Terminal [Y1] to [Y4] (Function selection) Terminal [Y5A/C] (Function selection) Terminal [30A/B/C] (Function selection)	158 (1158): Overload detection signal "LLIM"	
d186	Overload judgment delay time	0.00 to 10.00 s	
d187	Overload detection level	1.0 to 250.0%, 999 (disable)	
d188	Overload detection monitor	Dedicated monitor function code: -327.68 to +327.67%	

■ Overload detection "LLIM" assignment (Function code data = 158)

By assigning this signal to a digital output, the inverter is able to monitor that an overload has been detected. The signal turns ON when an overload is detected, the REV command is turned ON to lower the load, and when lowering stops (REV = OFF), this signal also turns OFF.

d132, d190, d192, d198, d199	**For adjustment by manufacturer**

These function codes are for adjustment by the manufacturer. Unless otherwise specified, do not access these function codes.

d193	**Special adjustment (Torque scaling factor for high load)**
d194, d195, d196, d197	**Special adjustment (Torque scaling factor for high load (for driving, braking))** **Special adjustment (Torque scaling effective speed for high load (for driving, braking))**

These are special adjustment function codes used to adjust the torque-speed accuracy for overload areas such as those in which the motor output torque exceeds 100%. If the overload area is used when accelerating or decelerating, there is no need to adjust these function codes.

It is necessary to understand the torque-speed characteristic for the motor overload area beforehand in order to adjust these function codes. When adjustment is necessary, consult your Fuji Electric representative.

5.3.17 d2 codes (Applied functions 2)

[1] Position control

d201 to d299	Position control

Position control can be performed using a feedback signal with PG. Feedback signal pulses are counted at the inverter, and operation is performed so that the amount of travel is based on the specified position data. Application is possible under vector control with speed sensor or under V/f control with speed sensor. If performing position control using a synchronous motor, use an encoder with A-phase, B-phase, Z-phase, and U-phase, V-phase, W-phase output for the magnetic pole position sensor. With encoders with only an A-phase, B-phase, and Z-phase, it is not possible to perform position control with a synchronous motor.

An orientation function has also been prepared as a position control response function.

The system configuration is shown in the following diagram.

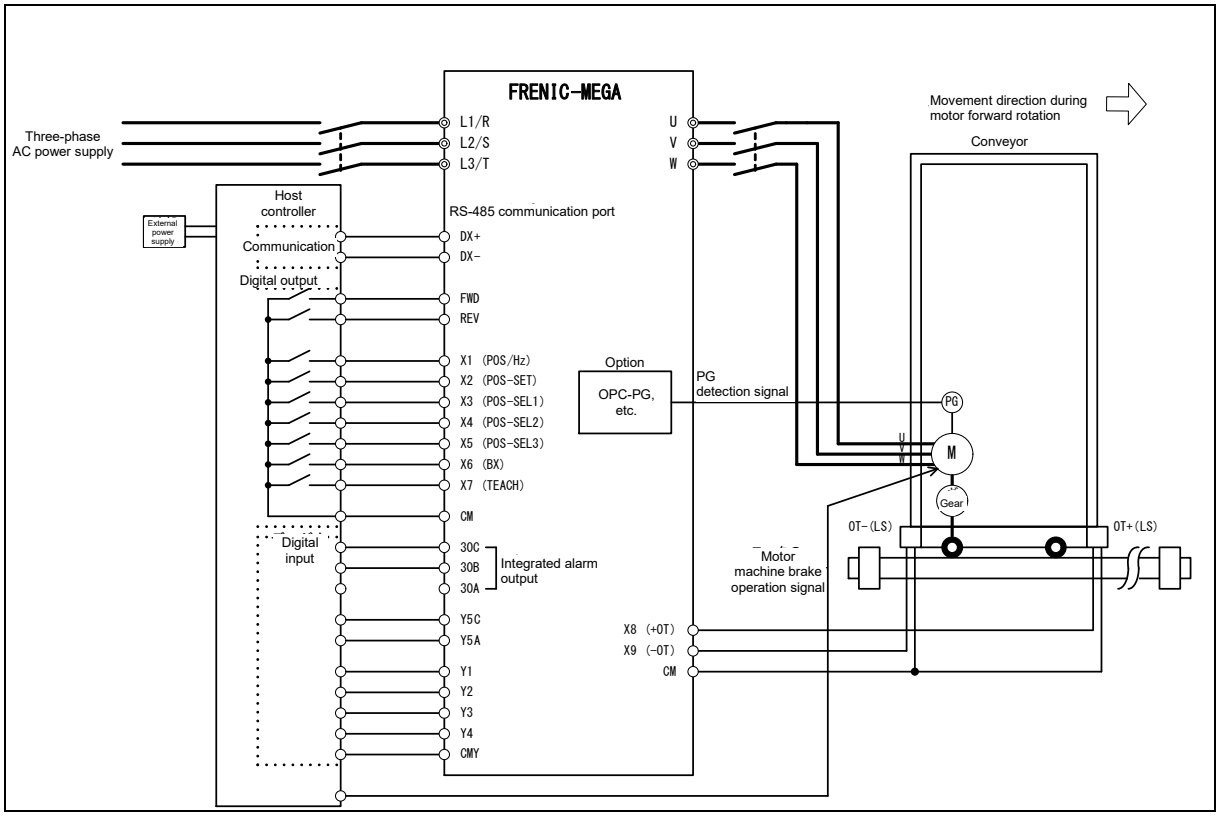

Note Do not set direction limit [H08] to 1 or 2 when performing position control. Position control will not function normally.

The control specifications are shown in the following table.

Item	Specification	Remarks
Speed control range	Vector control with speed sensor: 1:1500 V/f control with speed sensor: 1:200	PG: 1024P/R direct connection
Position control accuracy	• Motor shaft direct connection: ±1 pulse • Machine shaft (vector control): ±3 pulses • Machine shaft (dynamic torque vector control with speed sensor): ±5 pulses	PG: when 1024P/R used Control accuracy when multiplying by 4 Reduction ratio: 1 (excl. gear backlash)
Position data range	-99,999,999 to 99,999,999 (user value)	The user value is based on the electronic gear setting.

FUNCTION
F Codes
E Codes
C Codes
P Codes
H Codes
A Codes
b Codes
r Codes
J Codes
d Codes
U Codes
y Codes
K Codes

■ **Function code list**

The following table contains a list of related function codes used for position control.

Related function codes to used for position control

Function code	Name	Data setting range	Unit	Remarks
E01 to E09 E98 E99	Terminal [X1] to [X9] (Function selection) Terminal [FWD] (Function selection) Terminal [REV] (Function selection)	42 (1042): Home position limit switch “LS” 119 (1119): Speed regulator P operation "P-SEL" 135 (1135): Travel/absolute position switching "INC/ABS" 136 (1136): Orientation command "ORT" 137 (1137): Position control/speed control switching "POS/Hz" 138 (1138): Homing command "ORG" 139 (1139): + direction overtravel "+OT" 140 (1140): - direction overtravel "-OT" 141 (1141): Position clear command "P-CLR" 142 (1142): Position preset command "P-PRESET" 143 (1143): Teaching command "TEACH" 144 (1144): Positioning data change command "POS-SET" 145 (1145): Positioning data selection 1 "POS-SEL1" 146 (1146): Positioning data selection 2 "POS-SEL2" 147 (1147): Positioning data selection 4 "POS-SEL4"	-	
E20 to E24, E27	Terminal [Y1] to [Y4] (Function selection) Terminal [Y5A/C] (Function selection) Terminal [30A/B/C] (Function selection)	82 (1082): Position control complete signal“PSET” 151 (1151): Overtravel detection “OT-OUT” 152 (1152): Forced stop detection “STOP-OUT” 153 (1153): Pass point detection 1 “PPAS1” 154 (1154): Pass point detection 2 “PPAS2”	-	
d201	Position feed forward gain	0.00: Feed forward disable 0.01 to 1.50	-	
d202	Position feed forward command filter	0.000 to 5.000	s	
d203	Position regulator gain 1 (low speed range)	0.1 to 300.0	Times	
d204	Position regulator gain 2 (high speed range)	0.1 to 300.0	Times	
d205	Position regulator gain switching frequency	0.0 to 599.0	Hz	
d206	Electronic gear denominator	1 to 65535	-	
d207	Electronic gear numerator	1 to 65535	-	
d208	Orientation mode selection	0: With shortcut (run command direction and with reverse rotation) 1: Without shortcut (run command direction)	-	

Function code	Name	Data setting range	Unit	Remarks
d209	Homing mode selection	0000～00FF(Hexadecimal notation display) Bit 0: Homing starting direction 0: Forward rotation direction 1: Reverse rotation direction Bit 1: Homing direction 0: Forward rotation direction 1: Reverse rotation direction Bit 2: Homing OT operation selection 0: Reverse rotation following OT detection 1: Stop following OT detection Bit 3: Home position LS timing selection 0: ON edge detection 1: OFF edge detection Bit 7: Z-phase compensation 0: Disable 1: Enable	-	
d211	Homing reference signal	0: Encoder Z-phase 1: Home position LS 2: +OT 3: -OT	-	
d212	Homing shift reference signal	0: Encoder Z-phase 1: Home position LS valid edge 2: +OT 3: -OT 4: Stopper (contact)	-	
d213	Homing frequency/ orientation frequency	0.1 to 599.0	Hz	
d214	Homing creep frequency	0.1 to 599.0	Hz	
d215	Homing deceleration time/orientation deceleration time	0.00 to 6000 * When set to 0.00, acceleration/deceleration time is canceled.	s	
d216	Positioning data teaching	0: Disable 1 to 8: Enable (writes feedback current position written to positioning data 1 to 8)	-	
d217	Homing shift teaching	0: Disable 1: Enable (writes feedback current position to homing shift)	-	
d218	Software OT detection position teaching	0: Disable 1: Enable (writes feedback current position to +OT detection position) 2: Enable (writes feedback current position to -OT detection position)	-	
d219	Pass point detection position teaching (number designation)	0: Disable 1: Enable (writes feedback current position to pass point 1) 2: Enable (writes feedback current position to pass point 2)	-	
d220	Feedback current position memory selection	0: Do not memorize 1: Memorize following undervoltage	-	
d221	Position clear signal (P-CLR) operation selection	0: Clears when edge detected 1: Clears when level detected	-	
d222	Software OT operation selection	0: Disable software OT (endless) 1: Limit target position with software OT 2: Emergency stop when software OT detected	-	
d223	Deviation detection overflow value - 4 higher order digits	0 to 9999 * Disable when 0 for both d223, d224	U	
d224	Deviation detection overflow value - 4 lower order digits	0 to 9999 * Disable when 0 for both d223, d224	U	

FUNCTION
F Codes
E Codes
C Codes
P Codes
H Codes
A Codes
b Codes
r Codes
J Codes
d Codes
U Codes
y Codes
K Codes

Function code	Name	Data setting range	Unit	Remarks
d225	+ software OT detection position - 4 higher order digits	-9999 to +9999	U	
d226	+ software OT detection position - 4 lower order digits	0 to 9999	U	
d227	- software OT detection position - 4 higher order digits	-9999 to +9999	U	
d228	- software OT detection position - 4 lower order digits	0 to 9999	U	
d229	Pass point detection position 1 - 4 higher order digits	-9999 to +9999	U	
d230	Pass point detection position 1 - 4 lower order digits	0 to 9999	U	
d231	Pass point detection position 2 - 4 higher order digits	-9999 to +9999	U	
d232	Pass point detection position 2 - 4 lower order digits	0 to 9999	U	
d237	Positioning data type (INC/ABS switching)	0: Handle positioning data as absolute position (ABS) 1: Handle positioning data as travel (INC)	-	
d238	Positioning data selection signal agreement timer	0.000 to 0.100	s	
d239	In-position range	0 to 9999	U	
d240	Preset position - 4 higher order digits	-9999 to +9999	U	
d241	Preset position - 4 lower order digits	0 to 9999	U	
d242	Homing shift - 4 higher order digits	0 to 9999	U	
d243	Homing shift - 4 lower order digits	0 to 9999	U	
d244	Positioning data 1 - 4 higher order digits	-9999 to +9999	U	
d245	Positioning data 1 - 4 lower order digits	0 to 9999	U	
d246	Positioning data 2 - 4 higher order digits	-9999 to +9999	U	
d247	Positioning data 2 - 4 lower order digits	0 to 9999	U	
d248	Positioning data 3 - 4 higher order digits	-9999 to +9999	U	
d249	Positioning data 3 - 4 lower order digits	0 to 9999	U	
d250	Positioning data 4 - 4 higher order digits	-9999 to +9999	U	
d251	Positioning data 4 - 4 lower order digits	0 to 9999	U	
d252	Positioning data 5 - 4 higher order digits	-9999 to +9999	U	
d253	Positioning data 5 - 4 lower order digits	0 to 9999	U	
d254	Positioning data 6 - 4 higher order digits	-9999 to +9999	U	

Function code	Name	Data setting range	Unit	Remarks
d255	Positioning data 6 - 4 lower order digits	0 to 9999	U	
d256	Positioning data 7 - 4 higher order digits	-9999 to +9999	U	
d257	Positioning data 7 - 4 lower order digits	0 to 9999	U	
d258	Positioning data 8 - 4 higher order digits	-9999 to +9999	U	
d259	Positioning data 8 - 4 lower order digits	0 to 9999	U	
d276	Positioning data (infinite direction)	0: Disable 1: Forward rotation direction 2: Reverse rotation direction	-	
d277	Positioning data communication command selection	0: Disable positioning data communication command 1: Disable positioning data communication command	-	
d280	Operation during emergency stop	0: Servo lock after deceleration stop 1: Er6 alarm after deceleration stop	-	
d296	Command current position monitor - 4 higher order digits	-9999 to +9999	U	
d297	Command current position monitor - 4 lower order digits	0 to 9999	U	
d298	Feedback current position monitor - 4 higher order digits	-9999 to +9999	U	
d299	Feedback current position monitor - 4 lower order digits	0 to 9999	U	

Unit U indicates the user value.

FUNCTION
F Codes
E Codes
C Codes
P Codes
H Codes
A Codes
b Codes
r Codes
J Codes
d Codes
U Codes
y Codes
K Codes

■ Input terminal functions

Input terminal function list

Function data	Terminal function	Terminal name	Description
42	Home position limit switch	“LS”	After detecting the “LS” valid edge during homing operation, the motor moves from the first PG Z-phase by the homing shift and stops, and homing is performed.
119	Speed regulator P operation	“P-SEL”	By turning “P-SEL” ON, the speed regulator integration term is canceled, and P operation is performed. If the machine brake is applied during position control, the motor will not be able to rotate even if a positional displacement exists, and as a result, the integration term accumulates, possibly causing an overload trip. This function is used in cases such as this.
135	Travel/absolute position switching	“INC/ABS”	Positioning data is set as the relative position from the current point when this signal turns ON, and is set as the absolute position from the home position when the signal turns OFF.
137	Position control/speed control switching	“POS/Hz”	The mode changes to position control mode when this signal turns ON. The mode changes to speed control mode when the signal turns OFF. Operation is also possible while the motor is running. The servo lock is applied after positioning with position control. (under vector control) DC braking is applied under V/f control.
138	Homing command	“ORG”	The mode changes to homing mode when this signal turns ON.
139	+direction overtravel	“+OT”	Inputs a plus direction overtravel detection signal. This setting is enabled (contact b) when OFF. This is used for emergency stops and homing.
140	-direction overtravel	“-OT”	Inputs a minus direction overtravel detection signal. This setting is enabled (contact b) when OFF. This is used for emergency stops and homing.
141	Position clear command	“P-CLR”	Clears the current position to 0 when ON.
142	Position preset command	“P-PRESET”	Sets the current position to the preset position (d240, d241) when ON.
143	Teaching signal	“TEACH”	Stores the current position in position data 1 to 8 when ON (teaching operation). The position data 1 to 8 selection is made at d216.
144	Positioning data change command	“POS-SET”	The target position is changed, and the motor starts moving to the new target position when ON.
145 146 147	Positioning data selection 1 Positioning data selection 2 Positioning data selection 4	“POS-SEL1” “POS-SEL2” “POS-SEL4”	Select position data 1 to 8 with a combination of these.

■ **Output terminal functions**

Output terminal function list

Function data	Terminal function	Terminal name	Description
82	In-position signal	“PSET”	Turns ON when in-position (position deviation is d239 or less).
151	Overtravel detection	“OT-OUT”	Turns ON when an overtravel detection signal is received, or when a software OT is detected.
152	Forced stop detection	“STOP-OUT”	Turns ON when a forced stop is performed with digital input “STOP”.
153	Pass point detection 1	“PPAS1”	Turns ON if Pass point detection 1 (d229, d230) is passed. Turns ON if the motor passes in the forward direction when Pass point detection 1 is positive, and if the motor passes in the reverse direction when Pass point detection 1 is negative.
154	Pass point detection 2	“PPAS2”	Turns ON if Pass point detection 2 (d231, d232) is passed. Turns ON if the motor passes in the forward direction when Pass point detection 2 is positive, and if the motor passes in the reverse direction when Pass point detection 1 is negative.

FUNCTION
F Codes
E Codes
C Codes
P Codes
H Codes
A Codes
b Codes
r Codes
J Codes
d Codes
U Codes
y Codes
K Codes

■ Basic operation

By turning digital input “POS/Hz” ON while the motor is stopped, positioning control is enabled. Operation is then started when the run command is turned ON, the motor accelerates to the set frequency, and then decelerates and stops so that it moves to the position data. The servo lock is applied when the motor stops. 8 types of positioning data can be set, and a selection can be made with a combination of “POS-SEL1”, “POS-SEL2", and “POS-SEL4. Movement begins again following the position data change (target position change) when “POS-SET” turns ON. Digital output “PSET” turns ON while the servo lock is applied after reaching the target position. If applying the machine brake while the servo lock is applied, when “P-SEL” turns ON, the electrical angle is fixed, allowing the machine brake to be applied.

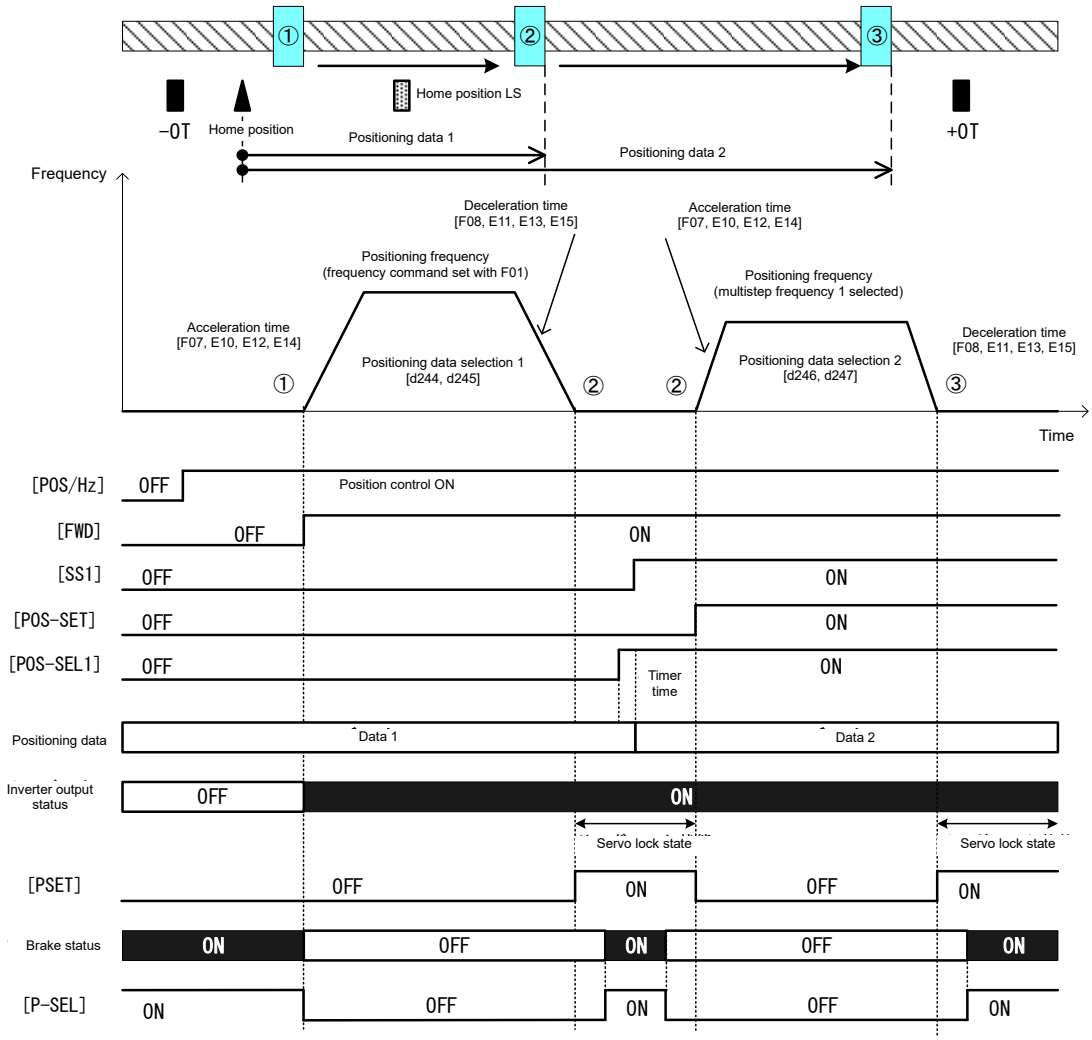

Positioning control behavior

■ Position control gain

Position control involves generating a torque command and speed command based on the deviation between the command position and current position with the operation pattern generated from position data (target position) to run the inverter. Generally speaking, speed control adjustment based on the actual load must be complete, and it must be possible to perform problem-free acceleration and deceleration. Position control gain adjusts the position control responsiveness. To increase the responsiveness, increase d203 and d204. If increased too much, hunting and overshoot will occur. If wishing to switch the gain between low speed and high speed, set the switching frequency with d205. If the motor vibrates when the system rigidity is weak and the gain is increased, increase d201.

Function code	Name	Data setting range	Unit	Remarks
d201	Position feed forward gain	0.00: Feed forward disable 0.01 to 1.50	-	
d202	Position feed forward command filter	0.000 to 5.000	s	
d203	Position regulator gain 1 (low speed range)	0.1 to 300.0	-	
d204	Position regulator gain 2 (high speed range)	0.1 to 300.0	-	
d205	Position regulator gain switching frequency	0.0 to 599.0	Hz	

■ Electronic gear

Generally speaking, position control manages the motor movement based on the PG pulse count, but it is more helpful to manage movement with the physical values (user values) determined by the system. The PG pulse count and user value conversion ratio can be set as the electronic gear.

Function code	Name	Data setting range	Unit	Remarks
d206	Electronic gear denominator	1 to 65535	-	
d207	Electronic gear numerator	1 to 65535	-	

(1) Electronic gear calculation method

The electronic gear numerator/electronic gear denominator ratio can be calculated from the travel (position resolution) per 1 user value unit [mm/user value], travel [mm/rev] per motor rotation, and PG pulse count [pulse/rev] per motor rotation.

$$\frac{\text{Electronic gear numerator}}{\text{Electronic gear denominator}} = \frac{\text{Travel per user value [mm/user value]}}{\text{Travel per PG pulse [mm/pulse]}}$$

$$= \frac{\text{Travel per user value [mm/user value]}}{\dfrac{\text{Travel per motor rotation [mm/rev]}}{\text{Pulse count per motor rotation [pulse/rev]}}}$$

Electronic gear numerator and electronic gear denominator fractions should be reduced and set so that they are both integers of 65535 or less.

[Electronic gear calculation example]

In the case of travel of 0.1 [mm/user value], machine speed of 150 [m/min] at motor speed of 1800 [r/min], and PG pulse count of 1000 [pulse/rev]

$$\frac{\text{Electronic gear numerator}}{\text{Electronic gear denominator}} = \frac{\text{0.1 [mm/user value]}}{\dfrac{\text{150 × 1000 ÷ 18001000 [mm/rev]}}{\text{1000 [pulse/rev]}}} = \frac{180}{150} = \frac{12}{10}$$

■ Deceleration time selection

The normal deceleration time (F07.E10, E12, E14) during position control is selected. The forced deceleration time (H56) is selected below.

• If the run command (FWD, REV) is cut off and the motor decelerates while performing position control

• If an overtravel (OT) is detected, or an emergency stop condition occurs when a “STOP” signal is input

■ Positioning data

Up to 8 points of positioning data can be set in user value units. These points are selected with a combination of digital input positioning data selection signals “POS-SEL1”, “POS-SEL2", and “POS-SEL4. To prevent chattering, the selection will change if the positioning data selection signal does not change until the d238: positioning data selection signal agreement timer time elapses. Positioning data can be changed while performing position control. To reflect the changed position, turn ON positioning data change command “POS-SET”.

If positioning data is changed while the motor is stopped, there will be no need to turn ON positioning data change command “POS-SET”.

“POS-SEL4”	“POS-SEL2”	“POS-SEL1”	Function code	Function data	Range (user value unit)
OFF	OFF	OFF	d244, d245	Positioning data 1	±99,999,999
OFF	OFF	ON	d246, d247	Positioning data 2	±99,999,999
OFF	ON	OFF	d248, d249	Positioning data 3	±99,999,999
OFF	ON	ON	d250, d251	Positioning data 4	±99,999,999
ON	OFF	OFF	d252, d253	Positioning data 5	±99,999,999
ON	OFF	ON	d254, d255	Positioning data 6	±99,999,999
ON	ON	OFF	d256, d257	Positioning data 7	±99,999,999
ON	ON	ON	d258, d259	Positioning data 8	±99,999,999

Function code	Name	Data setting range	Unit	Remarks
E01 to E09 E98 E99	Terminal [X1] to [X9] (Function selection) Terminal [FWD] (Function selection) Terminal [REV] (Function selection)	135(1135): Travel/absolute position switching “INC/ABS” 144(1144): Positioning data change command “POS-SET” 145(1145): Positioning data selection 1 “POS-SEL1” 146(1146): Positioning data selection 2 “POS-SEL2” 147(1147): Positioning data selection 4 “POS-SEL4”	-	
d237	Positioning data type (INC/ABS switching)	0: Handle positioning data as absolute position (ABS) 1: Handle positioning data as travel (INC)	-	
d238	Positioning data selection agreement timer	0.000 to 0.100	s	
d277	Positioning data communication command selection	0: Disable positioning data communication command (S20, S21) 1: Enable positioning data communication command (S20, S21)	-	
S20, S21	Positioning data communication (high order, low order)	±99,999,999	U	

■ Overtravel (OT)

Machine failure or an accident may occur if the motor passes the travel boundary point. Passing of the travel boundary point can be detected with hardware, and a digital signal can be input as an overtravel (OT) signal. Following OT detection, the motor decelerates and stops in the H56 forced deceleration time, and the servo lock is applied. If function code d280 = 1, an Err6 alarm occurs after the motor decelerates and stops. A plus side overtravel "+OT" and minus side overtravel "-OT" can be assigned individually. In the interests of safety, overtravel signals are enabled (contact b) when OFF. If an overtravel is detected, overtravel detection signal "OT-OUT" is output with digital output.

Function code	Name	Data setting range	Remarks
E01 to E09 E98 E99	Terminal [X1] to [X9] (Function selection) Terminal [FWD] (Function selection) Terminal [REV] (Function selection)	139(1139): + direction overtravel "+OT" 140(1140): - direction overtravel "-OT"	
d280	Operation during emergency stop	0: Servo lock after deceleration stop 1: Err6 alarm after deceleration stop	

Operation is possible if position data is updated to the return direction with the servo lock applied (d280 = 0) following OT detection, and control is changed to speed control, and a run command is issued to move the motor in the return direction. However, if "-OT" is input while the motor is traveling in the plus direction, or "+OT" is input while the motor is traveling in the minus direction, the motor does not move in either direction until the OT is cleared.

■ Software OT

Overtravel (OT) is basically used to detect the boundary travel point with hardware, but the boundary point position can be set with the pulse count. This is known as a software OT. A + software OT and - software OT can be set individually. The operation when a software OT is detected can be selected with d222. If no OT for such as the rotor exists, use with the factory default value of d222 = 0.

Function code	Name	Data setting range	Unit	Remarks
d222	Software OT operation selection	0: Disable software OT (endless) 1: Limit target position with software OT 2: Emergency stop when software OT detected	-	
d225	+ software OT detection position - 4 higher order digits	-9999 to +9999	U	
d226	+ software OT detection position - 4 lower order digits	0 to 9999	U	
d227	- software OT detection position - 4 higher order digits	-9999 to +9999	U	
d228	- software OT detection position - 4 lower order digits	0 to 9999	U	

■ d237 Positioning data type (INC/ABS switching)

It is possible to switch between handling the positioning data set for positioning data 1 to 8 as the absolute position, or as travel. If wishing to switch how the data is handled whenever necessary, use digital input terminal function travel/absolute position switching "INC/ABS" (data = 135). By assigning "INC/ABS" to the digital input terminal, the d237 setting becomes invalid.

■ d238 Positioning data selection signal agreement timer

If switching between positioning data selection 1 "POS-SEL" and positioning data selection 4 "POS-SEL4", the selected positioning data may change due to chattering. If this happens, set the time until the positioning data settles in d238.

■ d277 Positioning data communication command selection

Positioning data can be provided with communication. Set 1 for d277 if providing positioning data with communication. When doing so, the respective positioning data high order and low order are provided with communication command function codes S20 and S21.

To reflect the positioning data, turn ON positioning data change command “POS-SET”.
d244 and d245 positioning data 1 changes to S20 and S21 while the command from communication is active, but it is also possible to change from positioning data 2 to 8 by positioning data 1, 2, and 4 “POS-SEL1”, “POS-SEL2”, and “POS-SEL4”.

■ Homing basic operation

By inputting a run command with digital input terminal functions “POS/Hz” and “ORG” ON, homing is started. The operation direction is specified with d209. The motor accelerates to the homing frequency (d213), and after the moving body has turned ON home position limit switch “LS” (homing reference signal), the motor moves to from the first Z-phase signal (homing shift reference signal) by the homing shift (d242, d243), stops, and then homing is performed. In-position signal “PSET” is also output. If the overtravel turns ON before the home position LS, the motor will rotate in the reverse direction to look for the home position LS.

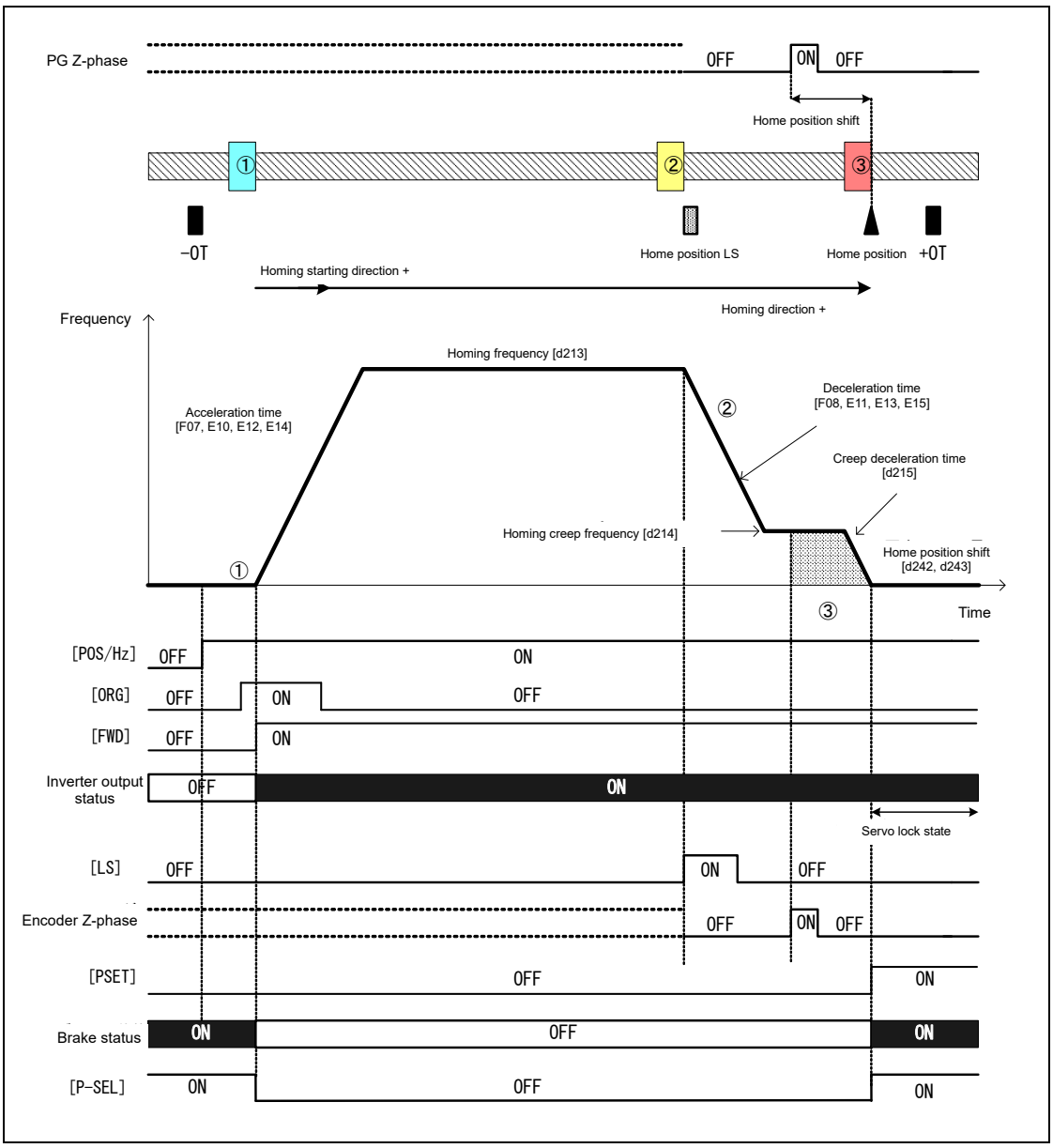

■ d209: Homing mode selection

This defines the homing starting direction, homing travel direction, operation when an OT is detected, and the LS detection timing.

Bit 0: Homing starting direction, 0: Forward rotation direction, 1: Reverse rotation direction

The motor starts in the direction specified with this definition, regardless of the inverter run command direction.

Bit 1: Homing direction, 0: Forward rotation direction, 1: Reverse rotation direction

Defines the homing travel direction. If the opposite direction from the starting direction is set, the motor will stop and then start reverse rotation after LS (homing reference signal) detection.

Bit 2: Homing OT operation selection, 0: Reverse rotation following OT detection, 1: Stop following OT detection

Defines whether to stop the motor or perform reverse rotation if an OT is detected before LS (homing reference signal) detection.

Bit 3: Home position LS timing selection, 0: ON edge detection, 1: OFF edge detection

Defines whether to perform LS detection with the LS ON edge, or with the OFF edge.

FUNCTION
F Codes
E Codes
C Codes
P Codes
H Codes
A Codes
b Codes
r Codes
J Codes
d Codes
U Codes
y Codes
K Codes

d209 is as follows if expressed with an illustration. In the following diagrams, OT reverse rotation is performed with bit 2 = 0.

[d209 bit1] Homing direction … 0: Forward rotation direction (+)		If home position > home position LS
Homing starting direction [d209 bit0]	Initial position	Homing profile drawing
0: + direction	- side from home position LS	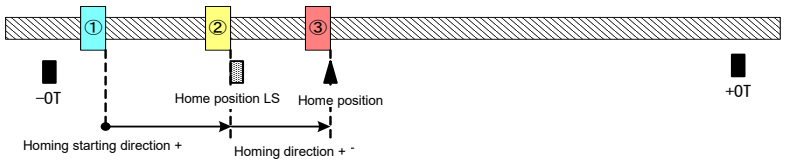
	+ side from home position LS	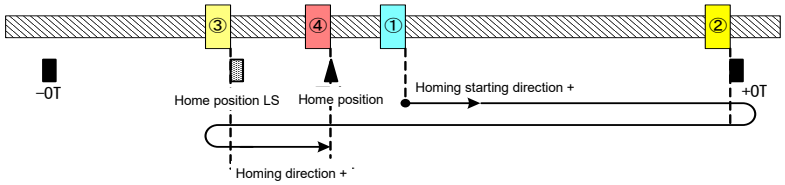
1: - direction	- side from home position LS	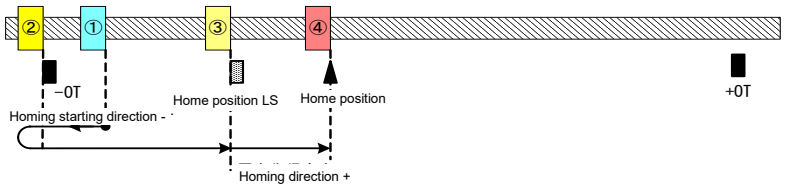
	+ side from home position LS	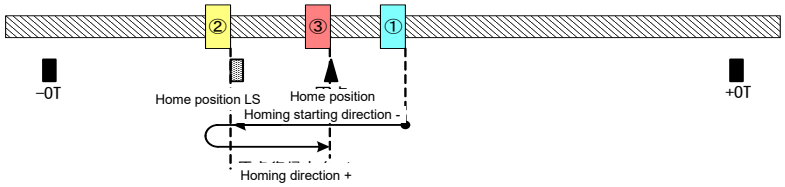

[d209 bit1] Homing direction … 1: Reverse rotation direction (-)		Home position < home position LS
Homing starting direction [d209 bit0]	Initial position	Homing profile drawing
0: + direction	- side from home position LS	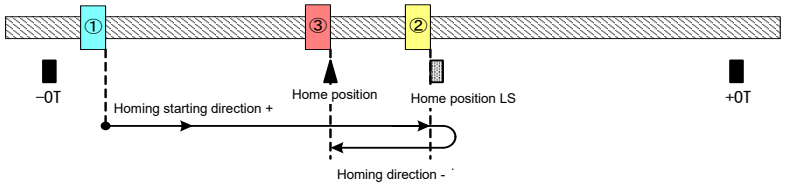
	+ side from home position LS	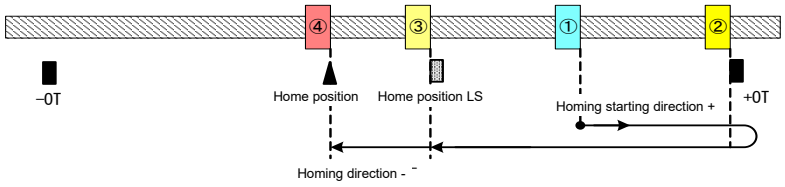
1: - direction	- side from home position LS	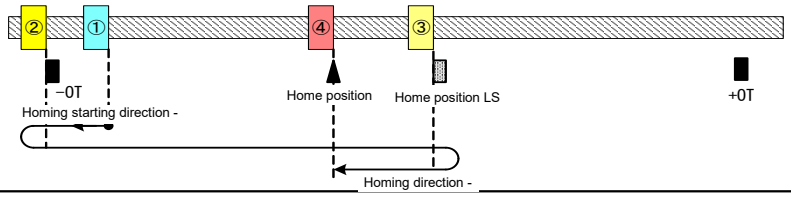
	+ side from home position LS	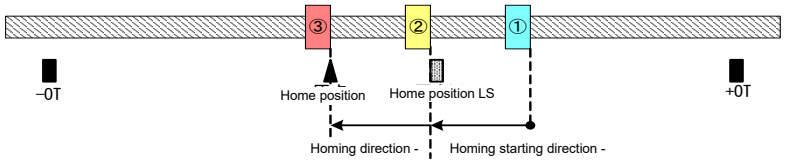

■ d211: Homing reference signal, d212: Homing shift reference signal

The homing reference signal is used to switching from the homing frequency to the homing creep frequency. The homing shift reference signal is used to start counting the homing shift. Normally, the home position LS is the homing reference signal, and the Z-phase signal is the homing shift reference signal. If configuring homing using other signals, select the homing reference signal and homing shift reference signal using the following table. If other than Z-phase is selected for d212 homing shift reference signal, the configuration will have no homing reference signal, and therefore the d211 homing reference signal will be invalid.

d211: Homing reference signal	d212: Homing shift reference signal	Frequency when beginning homing shift	Enable
0: Z-phase	0: Z-phase	Creep frequency	Homing shift is started when the Z-phase is detected for the first time after starting at the creep frequency.
1: Home position LS		Homing frequency to creep frequency	
2: +OT		Homing frequency to creep frequency	Decelerates to creep frequency when performing reverse rotation when OT reached.
3: -OT			
Disable	1: Home position LS	Homing frequency	
	2: +OT	Homing frequency to creep frequency	Decelerates to creep frequency when performing reverse rotation when OT reached.
	3: -OT		
	4: Stopper	Homing frequency to creep frequency	A stopper collision is judged when torque limiting occurs, the motor immediately moves in the reverse rotation direction, and the homing shift operation is performed at the creep frequency.

■ Position clear

Clears the current position to 0 when digital input “P-CLR” turns ON. Clearing is possible during position control or speed control. The timing at which the position is cleared can be selected from the ON edge or ON level.

Function code	Name	Data setting range	Remarks
E01 to E09 E98 E99	Terminal [X1] to [X9] (Function selection) Terminal [FWD] (Function selection) Terminal [REV] (Function selection)	141 (1141): Position clear command "P-CLR"	
d221	Position clear signal (P-CLR) operation selection	0: Clears when edge detected 1: Clears when level detected	

■ Position preset

Rewrites the current position at the d240, d241 preset position at the digital input “P-PRESET” ON edge. Presetting is possible during position control or speed control.

Function code	Name	Data setting range	Remarks
E01 to E09 E98 E99	Terminal [X1] to [X9] (Function selection) Terminal [FWD] (Function selection) Terminal [REV] (Function selection)	142 (1142): Position preset command "P-PRESET"	
d240	Preset position - 4 higher order digits	-9999 to +9999	
d241	Preset position - 4 lower order digits	0 to 9999	

FUNCTION
F Codes
E Codes
C Codes
P Codes
H Codes
A Codes
b Codes
r Codes
J Codes
d Codes
U Codes
y Codes
K Codes

■ Pass point detection

When the set pass point detection positions 1 and 2 are passed, digital output pass point detection signals “PPAS1” and “PPAS2” can be turned ON. Pass point detection position 1 corresponds to “PPAS1”, and pass point detection position 2 corresponds to “PPAS2”.

The ON and OFF conditions differ depending on the pass point detection position polarity.

(1) When pass point detection position is 0 or higher (+): ON when current position ≥ pass point detection position, OFF when current position < pass point detection position

(2) When pass point detection position is less than 0 (-): ON when current position ≤ pass point detection position, OFF when current position > pass point detection position

Function code	Name	Data setting range	Remarks
E20 to E24, E27	Terminal [Y1] to [Y4] (Function selection) Terminal [Y5A/C] (Function selection) Terminal [30A/B/C] (Function selection)	153(1153): Pass point detection 1 “PPAS1” 154(1154): Pass point detection 2 “PPAS2”	
d229	Pass point detection position 1 - 4 higher order digits	-9999 to +9999	
d230	Pass point detection position 1 - 4 lower order digits	0 to 9999	
d231	Pass point detection position 2 - 4 higher order digits	-9999 to +9999	
d232	Pass point detection position 2 - 4 lower order digits	0 to 9999	

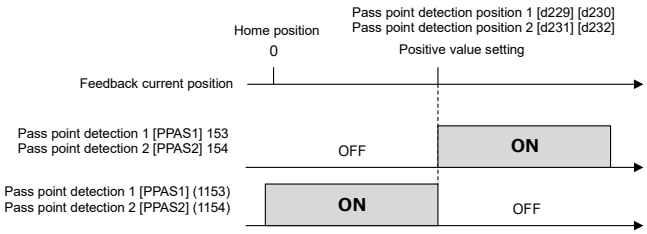

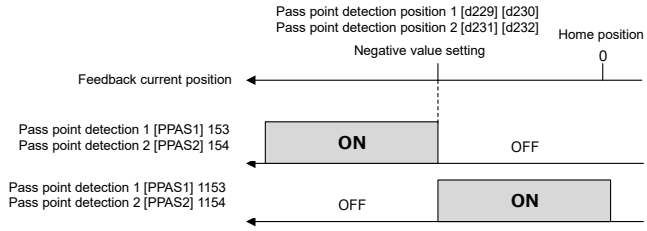

■ Teaching

The position data 1 to 8, homing shift, software OT detection position, and pass point detection position function code setting values can all be rewritten with the current position (teaching). Other than position data, all setting values are specified by setting the individual teaching function codes in the following table to 1 or 2. The setting values automatically return to 0. Teaching is possible at any time.

Teaching of position data 1 to 8 is performed by setting the position data number for d216, and turning digital input “TEACH” ON.

Function code	Name	Data setting range	Remarks
E01 to E09 E98 E99	Terminal [X1] to [X9] (Function selection) Terminal [FWD] (Function selection) Terminal [REV] (Function selection)	143 (1143): Teaching signal "TEACH"	
d216	Positioning data teaching	0: Disable 1 to 8; Position data 1 to 8 selection	
d217	Homing shift teaching	0: Disable 1: Writes feedback current position to homing shift (d242, d243)	
d218	Software OT detection position teaching	0: Disable 1: Writes feedback current position to + OT (d225, d226) 2: Writes feedback current position to - OT (d227, d228)	
d219	Pass point detection position teaching	0: Disable 1: Writes feedback current position to pass point detection position 1 (d229, d230) 2: Writes feedback current position to pass point detection position 2 (d231, d232)	

■ Position control with pulse train input

Position control can be performed with pulse train input as pulse position commands. With 12: Pulse train command set for the originally selected function code F01 (or C30) for the frequency command, by turning digital input “POS/Hz” ON, position control is performed using pulses from pulse train input as position command pulses.

Electronic gears operate at the ratio of input pulses to position commands (user values) in the same way as that for feedback pulses. If the ratio differs, align them using pulse scaling factor 1 and 2 (d62, d63).

Position command (user value) =

$$\text{No. of input pulses} \times \frac{\text{d63: Pulse scaling factor 2}}{\text{d62: Pulse scaling factor 1}} \times \frac{\text{d207: Electronic gear numerator}}{\text{d206: Electronic gear denominator}}$$

Refer to the function code F01 item for pulse train input method detailed settings.

A setting example for a conveyor performing sizing by position control is shown below.

FUNCTION
F Codes
E Codes
C Codes
P Codes
H Codes
A Codes
b Codes
r Codes
J Codes
d Codes
U Codes
y Codes
K Codes

[2] Setting example for conveyor performing sizing by position control

Conveyor configuration example

- Reduction ratio between motor and machine: 1:5
- Encoder connected to machine shaft
- Encoder pulse count 1024 [Pulse/rev]
- Conveyor moves 6.78 [mm] with single rotation of machine shaft
- Conveyor moves 123.45 [mm] with single positioning operation

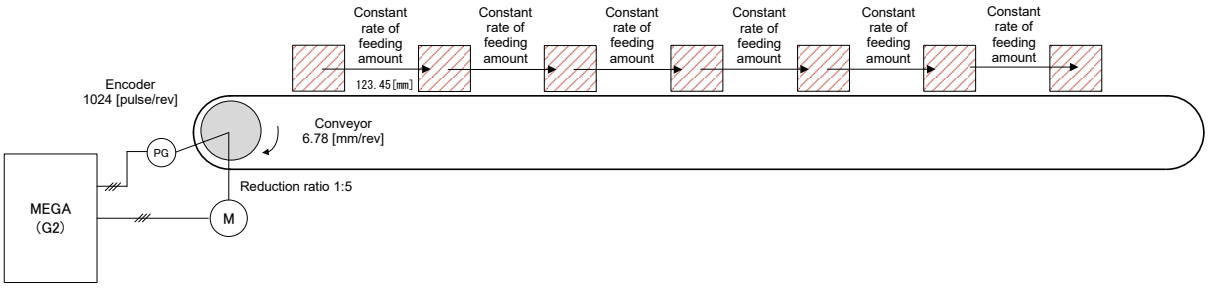

Electronic gear settings

The user should consider specifying travel in 0.01 [mm] units for a conveyor with the above configuration.
In this case, the encoder value and user value are calculated using an electronic gear.

$$\frac{\text{Electronic gear numerator}}{\text{Electronic gear denominator}} = \frac{\text{Travel per 1 user value digit}}{\dfrac{\text{Travel per rotation}}{\text{Encoder feedback pulse}}} = \frac{0.01\ [\text{mm}]}{\dfrac{6.78\ [\text{mm/rev}]}{1024\ [\text{pulse/rev}]}} = \frac{1024}{678} = \frac{d207}{d206}$$

Furthermore, the part connected to the encoder is not the motor shaft, but the spindle (machine shaft), and therefore it will also be necessary to set speed control related parameters. The following parameters must be set.

d15	1024
d16	1
d17	5

If providing the target position with absolute position commands

Constant rate of feeding can be realized by clearing the current position after each movement. And in the case of absolute position commands, by setting a software OT, the machine can be protected from overshoot each time.

If the constant rate of feeding amount is 123.45 mm, and the software OT is set to 133.45 mm, the following parameter values should be set.

d222 = 2	Deceleration start at software OT
d225 = +1	4 higher order digits of software +OT
d226 = 3345	4 lower order digits of software +OT
d237 = 0	Target position = absolute position
d244 = +1	4 higher order digits of positioning data 1
d245 = 2345	4 lower order digits of positioning data 1

Furthermore, the following terminal functions should be set for the digital input terminals as terminal functions.

[Functions set for E01 to E09]

137(1137)	Position control/speed control switching "POS/Hz"
141(1141)	Position clear “P-CLR”
144(1144)	Positioning data update “POS-SET”

A time chart showing when these operations are performed is shown below.

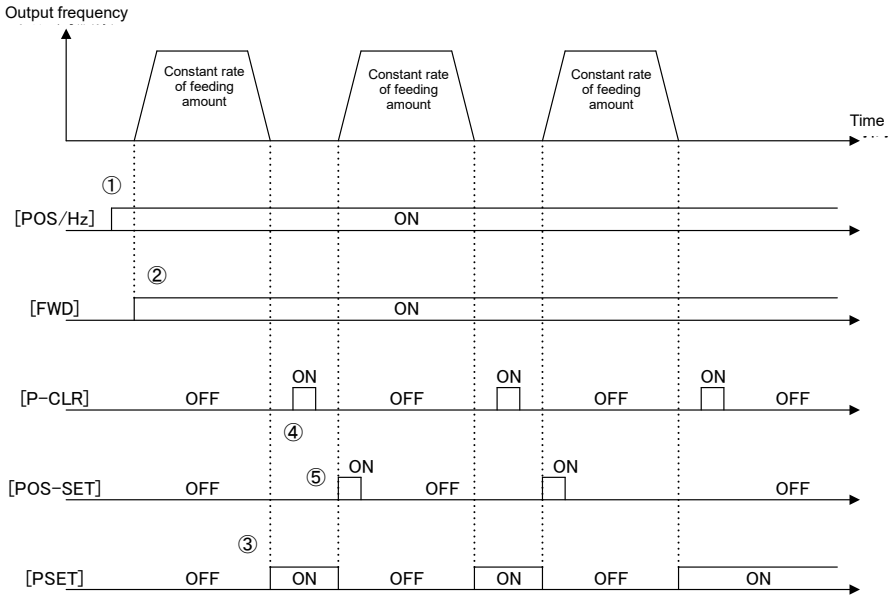

- Position control is enabled when “POS-SET” is ON.
- The inverter starts running when “FWD” is ON. If positioning data selection “POS-SEL#” has not been assigned, positioning data 1 is selected as the stop target position.
- After stopping at the target position, in-position “PSET” turns ON when the position deviation is in the in-position range.
- By setting “P-CLR” to ON, the current position is cleared to 0 (same as returning to home position).
- With positioning data update “POS-SET” set to ON, operation begins under position control with the target position again set as position data 1.
- Steps (3) to (5) are then repeated.

FUNCTION
F Codes
E Codes
C Codes
P Codes
H Codes
A Codes
b Codes
r Codes
J Codes
d Codes
U Codes
y Codes
K Codes

Providing the target position with relative position commands

If providing the target position with relative position commands, unlike absolute position commands, there is no need to clear the current position when in-position. However, it is not possible to provide overshoot protection with a software OT.

If the constant rate of feeding amount is set to 200.00 mm, the following parameter values should be set.

d237 = 1	Target position = relative position
d244 = +1	4 higher order digits of positioning data 1
d245 = 2345	4 lower order digits of positioning data 1

Furthermore, the following terminal functions should be set for the digital input terminals as terminal functions.

[Functions set for E01 to E09]

137(1137)	Position control/speed control switching "POS/Hz"
144(1144)	Positioning data update “POS-SET”

A time chart showing when these operations are performed is shown below.

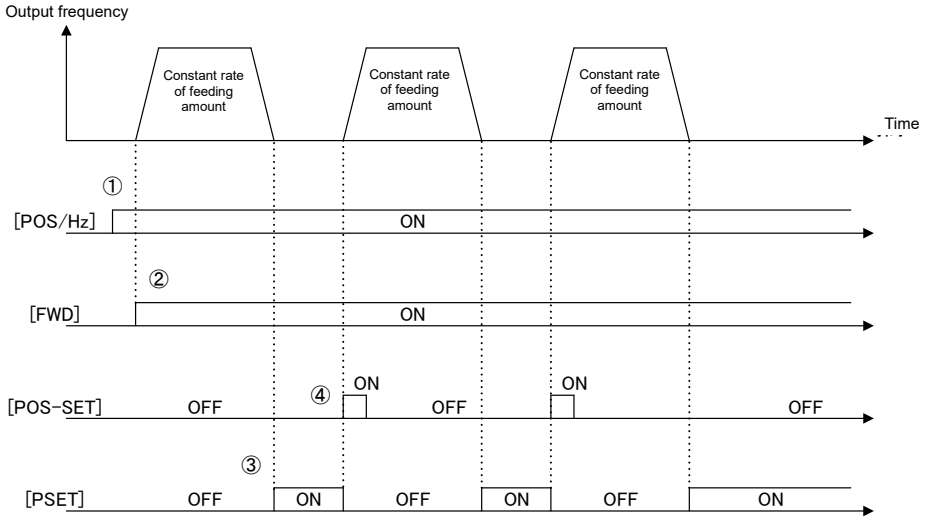

- Position control is enabled when “POS-SET” is ON.
- The inverter starts running when “FWD” is ON. If positioning data selection “POS-SEL#” has not been assigned, positioning data 1 is selected as the stop target position.
- If starting operation from current position = 0, the target position is provided with target position = 0 (current position) + 20000 (positioning data 1).
- After stopping at the target position, in-position “PSET” turns ON when the position deviation is in the in-position range.
- With positioning data update “POS-SET” set to ON, operation begins under position control with the target position = current position + 20000 (positioning data 1).
- Steps (3) to (4) are then repeated.

■ Orientation

The orientation function can be used as a position control response function.

Orientation can be performed with speed control during operation or while stopped.

Orientation cannot be performed when using PM motors.

Orientation during speed control

Move the motor being rotated under speed control to the prescribed machine position. By turning ON digital input "ORT" while the motor is being run under speed control, the motor decelerates to the orientation frequency d213 in the selected deceleration time, the mode changes to position control mode, the amount of rotation at which the motor is able to decelerate and stop at orientation deceleration time d215 from the current position to the selected positioning data position is calculated, and the motor then stops after rotating by that amount.

Positioning data can be selected with digital input positioning data selection signals "POS-SEL1", "POS-SEL2", and "POS-SEL4" from positioning data 1 to 8 (d244 to d259). If providing positioning data with the factory default absolute position (ABS), this will be the absolute position with the encoder Z-phase as the reference. If wishing to provide positioning data as the absolute position with the machine home position as the reference instead of the encoder Z-phase, by setting a position offset for the encoder Z-phase-machine home position in homing shift d242 and d243, positioning data 1 to 8 (d244 to d259) can be used as machine home position positioning data as is.

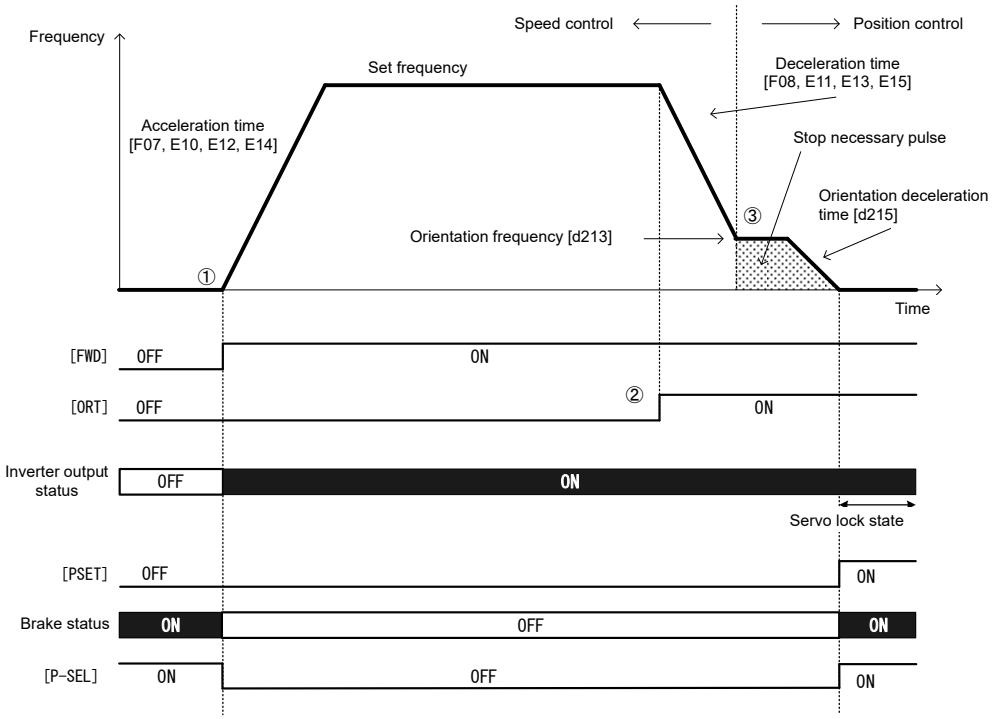

Orientation while performing speed control

Note By turning orientation command "ORT" OFF while stopped during orientation, the motor accelerates to the set frequency and speed control is resumed.

FUNCTION
F Codes
E Codes
C Codes
P Codes
H Codes
A Codes
b Codes
r Codes
J Codes
d Codes
U Codes
y Codes
K Codes

Performing orientation the motor is stopped

When positioning with orientation is complete, if under vector control with speed sensor, the servo lock is applied, and digital output “PSET” is output if the position deviation is within in-position range d239. If the positioning position is changed, “POS-SET” is turned ON, and orientation is performed again from this condition, position control is applied, and positioning is performed within a single motor rotation. At this time, the “shortcut”operation which performs positioning in the shortest distance regardless of the direction in which the motor is running, and the “no shortcut” operation performed in the run command direction can be selected with d208.

If under V/f control with speed sensor, DC braking is applied, and the inverter maintains output.

If performing orientation while the motor is stopped, the motor will not rotate any more than once, even if a value of more than one rotation is set in the positioning data.

By turning the run command ON after turning ON orientation command “ORT” while inverter output is stopped, orientation is performed immediately without running to the set frequency under speed control. However, if orientation command “ORT”is turned ON and the motor is run while stopped immediately after turning the power, orientation must be performed after running for one rotation or more under speed control in order to detect the Z-phase.

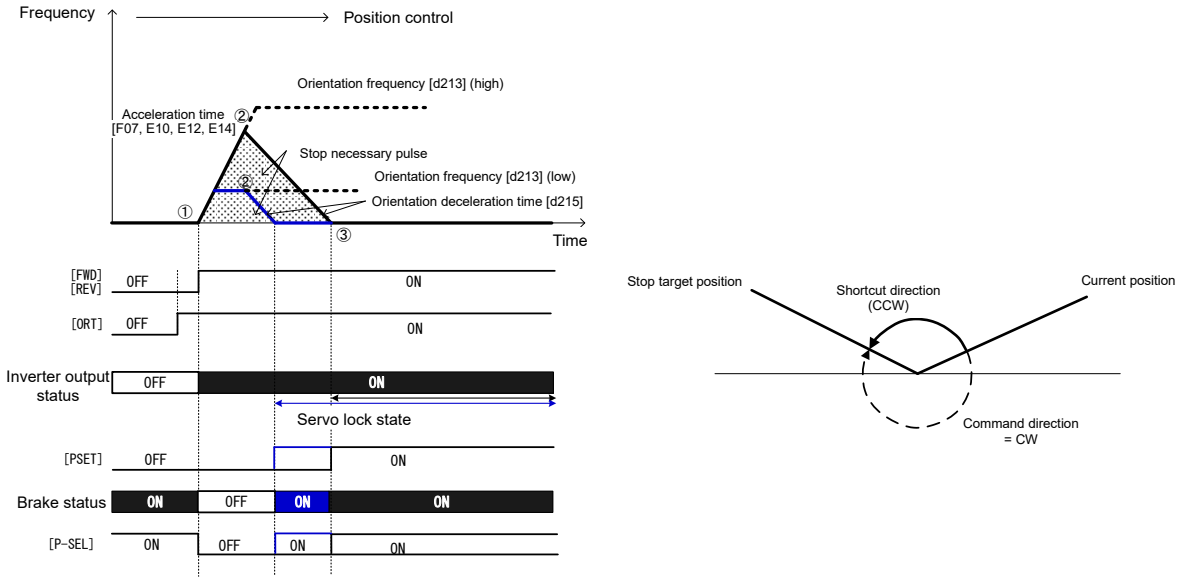

Orientation operation when the motor is stopped

Note

If performing orientation, mount an encoder on the machine shaft. However, if the machine shaft is directly connected to the motor shaft, mount the encoder on the motor shaft. Orientation can be performed only if able to detect the Z-phase only once with the same positional relationship while the machine shaft rotates once.

If using the orientation function, and the motor/machine shaft transmission ratio (reduction ratio) is approximately 5 times (guide) or less, vector control with speed sensor used to perform speed feedback control with the machine shaft encoder can be selected for the control method.

Under vector control with speed sensor, the servo lock is applied after positioning stops, resistance torque is produced and the stop position is held, even if an external force is applied after stopping.

On the other hand, if the machine shaft and motor shaft transmission ratio (reduction ratio) is large, it will be difficult to detect the motor speed when the motor is rotating at low speed without the use of an encoder with high pulse count, and it may no longer be possible to demonstrate sufficient motor performance. On machines on which it is not possible to use an encoder with high pulse count, and with large transmission ratio, use V/f control with speed sensor instead of vector control with speed sensor which performs speed feedback control from the machine shaft encoder. Under v/f control with speed sensor, it is not possible to apply the servo lock. If an external force is applied after the motor stops, use the machine brake. Furthermore, under V/f control with speed sensor, torque is generated at ultra low speed immediately before stopping, and therefore it may be necessary to adjust the torque boost or set auto torque boost.

Note Under feedback control with the machine shaft encoder, if the belt tension, etc. is insufficient for the connection between the “machine shaft” and “encoder shaft” or between the “machine shaft” and “motor shaft”, the performance of feedback control with the machine shaft encoder will drop, and in the worst case scenario, an alarm may occur. It is therefore necessary to pay sufficient attention to mechanical system rigidity.

Function code	Name	Data setting range	Unit	Remarks
E01 to E09, E98, E99	Terminal [X1] to [X9] function Terminal [FWD] (Function selection) Terminal [REV] (Function selection)	78 (1078): Speed control parameter selection 1 “MPRM1” 79 (1079): Speed control parameter selection 2 “MPRM2” 135 (1135): Travel/absolute position switching "INC/ABS" 136 (1136): Orientation command "ORT" 137 (1137): Position control/speed control switching "POS/Hz" 141 (1141): Position clear command "P-CLR" 142 (1142): Position preset command "P-PRESET" 143 (1143): Teaching command "TEACH" 144 (1144): Positioning data change command "POS-SET" 145 (1145): Positioning data selection 1 "POS-SEL1" 146 (1146): Positioning data selection 2 "POS-SEL2" 147 (1147): Positioning data selection 4 "POS-SEL4"	-	
E20 to E24, E27	Terminal [Y1] to [Y4] (Function selection) Terminal [Y5A/C] (Function selection) Terminal [30A/B/C] (Function selection)	82 (1082): Position control complete signal“PSET”	-	
d03, A45 b45, r45	Speed control P (Gain)	0.01 to 200.0	Times	
d04, A46 b46, r46	I (Integral time)	0.000 to 5.000	s	
d201	Position feed forward gain	0.00: Feed forward disable 0.01 to 1.50	-	
d202	Position feed forward command filter	0.000 to 5.000	s	
d203	Position regulator gain 1 (low speed range)	0.1 to 300.0	Times	
d204	Position regulator gain 2 (high speed range)	0.1 to 300.0	Times	
d205	Position regulator gain switching frequency	0.0 to 599.0	Hz	
d206	Electronic gear denominator	1 to 65535	-	
d207	Electronic gear numerator	1 to 65535	-	
d208	Orientation mode selection	0: With shortcut (run command direction and with reverse rotation) 1: Without shortcut (run command direction)	-	
d209	Homing mode selection	0 to 15 (00 to 0F) Bit 7: Z-phase compensation 0: Disable 1: Enable	-	
d213	Homing frequency/orientation frequency	0.1 to 599.0	Hz	
d215	Orientation deceleration time	0.00 to 6000 * When set to 0.00, acceleration/deceleration time is canceled.	s	

FUNCTION
F Codes
E Codes
C Codes
P Codes
H Codes
A Codes
b Codes
r Codes
J Codes
d Codes
U Codes
y Codes
K Codes

Function code	Name	Data setting range	Unit	Remarks
d216	Positioning data teaching	0: Disable 1 to 8: Writes to positioning data 1 to 8	-	
d217	Homing shift teaching	0: Disable 1: Writing enabled	-	
d221	Position clear signal (P-CLR) operation selection	0: Clears when edge detected 1: Clears when level detected	-	
d237	Positioning data type (INC/ABS switching)	0: Handle positioning data as absolute position (ABS) 1: Handle positioning data as travel (INC)	-	
d238	Positioning data selection agreement timer	0.000 to 0.100	s	
d239	Positioning complete range	0 to 9999	U	
d240	Preset position - 4 higher order digits	-9999 to +9999	U	
d241	Preset position - 4 lower order digits	0 to 9999	U	
d242	Homing shift - 4 higher order digits	0 to 9999	U	
d243	Homing shift - 4 lower order digits	0 to 9999	U	
d244	Positioning data 1 - 4 higher order digits	-9999 to +9999	U	
d245	Positioning data 1 - 4 lower order digits	0 to 9999	U	
d246	Positioning data 2 - 4 higher order digits	-9999 to +9999	U	
d247	Positioning data 2 - 4 lower order digits	0 to 9999	U	
d248	Positioning data 3 - 4 higher order digits	-9999 to +9999	U	
d249	Positioning data 3 - 4 lower order digits	0 to 9999	U	
d250	Positioning data 4 - 4 higher order digits	-9999 to +9999	U	
d251	Positioning data 4 - 4 lower order digits	0 to 9999	U	
d252	Positioning data 5 - 4 higher order digits	-9999 to +9999	U	
d253	Positioning data 5 - 4 lower order digits	0 to 9999	U	
d254	Positioning data 6 - 4 higher order digits	-9999 to +9999	U	
d255	Positioning data 6 - 4 lower order digits	0 to 9999	U	
d256	Positioning data 7 - 4 higher order digits	-9999 to +9999	U	
d257	Positioning data 7 - 4 lower order digits	0 to 9999	U	
d258	Positioning data 8 - 4 higher order digits	-9999 to +9999	U	
d259	Positioning data 8 - 4 lower order digits	0 to 9999	U	
d277	Positioning data communication command selection	0: Disable positioning data communication command (S20, S21) 1: Enable positioning data communication command (S20, S21)	-	

■ **d203, d204 Position regulator gain 1 (Low speed range), Position regulator gain 2 (High speed range)**

■ **d205 Position regulator gain switching frequency**

■ **d03, A45, b45, r45 Speed control P (Gain)**

■ **d04, A46, b46, r46 Speed control (Integral time)**

The position control responsiveness during deceleration and while the motor is stopped can be changed for the orientation operation.

The greater the setting value, the more the responsiveness improves, settling time is reduced, and the holding force while the stopped motor is being held by the servo lock increases, but hunting will occur if the setting value is too large. Adjust so that hunting does not occur.

Furthermore, if the speed regulator gain is too high, adjust the speed regulator (ASR) also.
If switching the speed control P (gain) and I (integral time), use parameter selection 1 “MPRM1” and 2 “MPRM2”.

Refer to the d03, d04 explanation for details on the speed control P (gain) and I (integral time).

Note

- By suddenly increasing the position regulator gain or speed regulator (ASR) gain, motor hunting may occur, possible resulting in equipment damage. Do not increase the setting values for these gain setting function codes suddenly. Furthermore, do not decrease the integral time setting function code data suddenly.
- If the encoder pulse count is low, it will not be possible to increase the gain setting value.

■ **d206, d207: Electronic gear (Denominator, Numerator)**

Positioning data for orientation can be handled with user values such as angle and pulse count.

If using a PG with pulse count of 1024 (pulse/rev), and the travel per user value is set to 1 [pulse/user value] for the equivalent pulse count before multiplying the PG pulse by 4

$$\frac{\text{Electronic gear numerator}}{\text{Electronic gear denominator}} = \frac{\text{Travel per user value}}{\text{Travel per PG pulse}} = \frac{\frac{1}{4 \times 1024}\text{[rev/user value]}}{\frac{1}{1024}\text{[rev/pulse]}} = \frac{1}{4}\text{[pulse/user value]}$$

If handled with travel per user value of 0.01 [°/user value], travel of 360.00 [°/rev] per motor rotation, and PG pulse count of 4096 (1024 x multiplication by 4) [pulse/rev]

$$\frac{\text{Electronic gear numerator}}{\text{Electronic gear denominator}} = \frac{\text{Travel per user value}}{\text{Travel per PG pulse}} = \frac{0.01\text{ [°/user value]}}{\frac{360.00\text{ [°/rev]}}{4096\text{ [pulse/rev]}}} = \frac{4096}{36000}\text{[pulse/user value]}$$

■ **d208: ORT mode selection**

If d208 = 0, the motor rotates in the direction (shortcut) which requires the least movement to the positioning data specified from the current position, regardless of the run command direction. However, if the motor has not been run even once immediately after turning ON the power, the nearest direction will not be known, and therefore the motor runs in the run command direction, and orientation is performed. Positioning is then performed with a shortcut.
If d208 = 1, the motor starts moving in the normal run command direction, and orientation is performed.

■ **d209: Homing mode selection**

There may be variations in the output timing with the A-phase and B-phase pulses, and the Z-phase pulses in the pulse encoder.

When using the motor for forward rotation and reverse rotation, if a 1 pulse position displacement occurs at the machine side when positioning is performed to the same position, set d209 bit 7: Z-phase compensation to 1. By enabling this compensation, it is possible to suppress position displacement resulting from the rotation direction.

FUNCTION
F Codes
E Codes
C Codes
P Codes
H Codes
A Codes
b Codes
r Codes
J Codes
d Codes
U Codes
y Codes
K Codes

■ d213 Orientation frequency

This is the frequency used when switching from speed control to position control with orientation command “ORT” from speed control.

If the set frequency is high, the time until in-position is achieved will become longer, and if torque limiting deceleration is being performed, a position deviation over (oF) alarm may occur. If performing torque limiting deceleration, set the frequency when switching from speed control to position control as low as possible.

If the set frequency is low under V/f control with speed sensor, it will be difficult to position the motor at the specified position without adjusting the torque boost or using auto torque boost. Adjust orientation deceleration time d215, and both position regulator gain 1 (low speed range) (d203) and position regulator gain 2 (high speed range) (d204) so that the prescribed settling time is obtained to suit the control method.

■ d215 Orientation deceleration time

Sets the deceleration time from orientation speed d213. Adjust this time if there is any overshoot or swing back relative to the specified position, allowing the settling time to be adjusted.

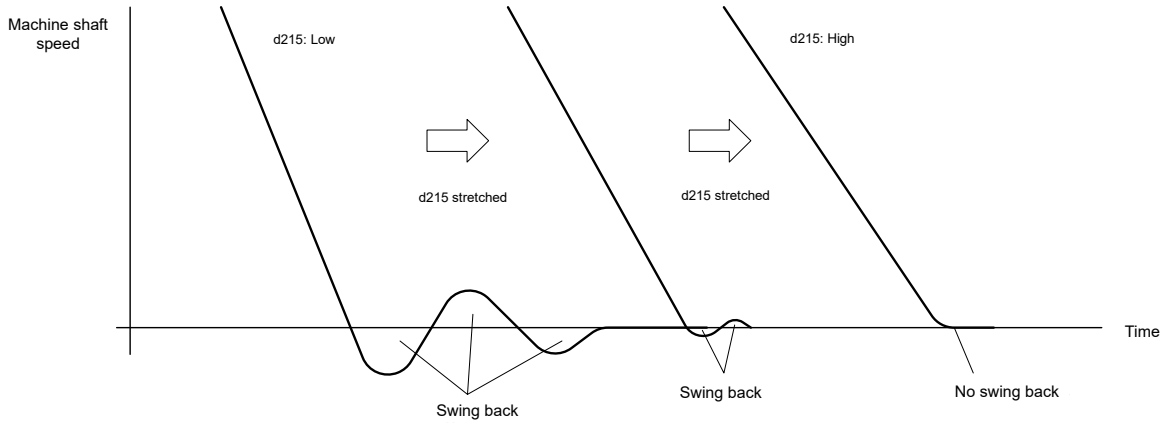

■ d240, d241: Preset position

The command current position and feedback current position can be set to the desired position with the machine homing position as the reference.

With orientation, the position offset with the machine homing position and encoder Z-phase are normally handled as the homing shift, and therefore preset position d240 and d241 should be set to 0.

■ d242, d243: Homing shift

The homing shift for orientation is equivalent to the position offset with the machine homing position and encoder Z-phase.

Adjust the homing shift using the following procedure.

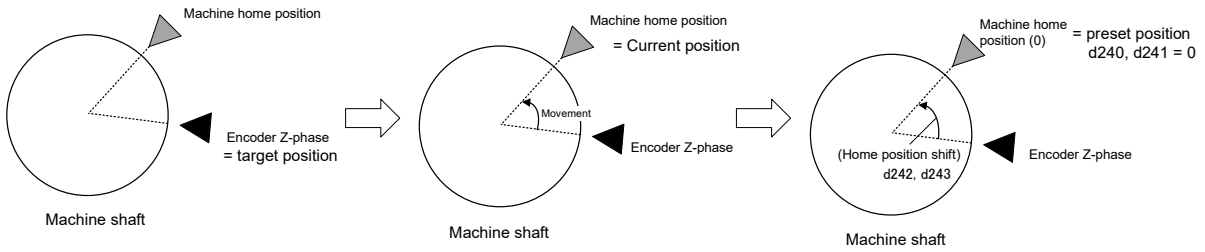

(1) By turning ON the orientation command with the target position as 0, positioning is performed with the encoder Z-phase as the home position.

(2) After this, by setting d217 = 1, running the motor, moving the machine shaft to the machine home position and stopping, and turning ON position preset “P-PRESET”, feedback current position d298 and d299 and homing shift d242 and d243 are automatically set based on position preset d240 and d241.Return d217 to 0 after setting. Be sure to rotate the encoder once or more and perform position preset after the Z-phase is detected.

(3) For confirmation purposes, perform orientation again to set the target position to 0 (home position), perform orientation, and ensure that it can be performed to the machine home position.

■ d244 to d259 Positioning data 1 to 8, d238 Positioning data selection signal agreement timer, d216 Positioning data teaching

Sets the positioning position for orientation. Up to 8 points can be set, and multi-point positioning can be performed consecutively by using positioning data selection 1 to 4 (POS-SEL1 to 4). By using d216, the current machine shaft position is read, allowing positioning data to be set easily. When switching positioning data using the positioning data selection signal, set a time equal to or longer than the time required for chattering to settle for d238 in order to prevent malfunction due to chattering. If changes are made to the positioning data with the run command ON, be sure to turn ON positioning data change command “POS-SET”. Positioning data changes while the run command is OFF are set again when starting operation, and therefore there will be no need to turn ON positioning data change command “POS-SET”.

If performing orientation, unlike with position control, the position is automatically corrected to a position within a single rotation when running the motor, even if a value for a single rotation or more is set in the positioning data.

■ d277 Positioning data communication command selection

If wishing to perform positioning using positioning data (S20, S21) from communication to perform orientation, set d277 to 1 in the same way as with position control to enable positioning commands from communication.

■ Functions that are disabled with position control

The following functions are disabled when position control/speed control switching “POS/Hz” is ON and the run command is ON.

Jogging operation, PID control, start frequency hold, stop frequency hold, restart after momentary power failure, retry, offline tuning, anti-regenerative control, overload prevention, deceleratation mode(H11), torque control

■ Position monitor

The feedback current position and command current position can be monitored at the keypad. The feedback current position is the position converted to a user value by adding up the total number of feedback pulses. The command current position is not the target position, but is the momentary command position based on the position command pattern, and is the same value as the feedback current position while the motor is stopped.

Function code	Name	Data setting range	Unit	Remarks
d296	Command current position monitor - 4 higher order digits	-9999 to +9999	U	
d297	Command current position monitor - 4 lower order digits	0 to 9999	U	
d298	Feedback current position monitor - 4 higher order digits	-9999 to +9999	U	
d299	Feedback current position monitor - 4 lower order digits	0 to 9999	U	

FUNCTION
F Codes
E Codes
C Codes
P Codes
H Codes
A Codes
b Codes
r Codes
J Codes
d Codes
U Codes
y Codes
K Codes

5.3.18 U codes (Customizable logic operation)

5.3.19 U1 codes (Customizable logic operation)

The customizable logic function allows the user to form a logic or operation circuit for digital/analog input/output signals, customize those signals arbitrarily, and configure a simple relay sequence inside the inverter.

The customizable logic editor function in the FRENIC-Loader4 inverter support software can be used to create graphical representations of customizable logic circuit, convert them to function codes, and transfer settings to the inverter. Refer to the FRENIC-Loader4 Instruction Manual (INR-SI47-2104) for details.

In the customizable logic, one step (component), depending on the type, is composed of:

(1) Digital 2 inputs, digital 1 output + logical operation (including timer)

(2) Analog 2 inputs, analog 1 output/digital 1 output + numerical operation

(3) Analog 1 input, digital 1 input, analog 1 output + numerical operation, logical operation

(4) Function code reading, writing, switching, linking, and bit extraction can be set, and sequences can be combined using up to 260 steps.

can be set as a single step (configuration element), and sequences can be combined using up to 260 steps.

■ **Specification**

Item	Specification			
Input signal	Digital 2 input	Analog 2 input	Analog 1 input Digital 1 input	Function code operation
Operation block	Logical operation, counter, etc.: 15 types Timer: 5 types 66 types combined	Numerical operation, comparator, limiter, etc.: 29 types	Selector, hold, etc.: 9 types	9 types, including reading, writing
Output signal	Digital 1 output	Analog 1 output/ Digital 1 output	Analog 1 output	Function code Digital 1 output
Max. number of steps	200 steps (multi-task) 260 steps (single task)			
Customizable logic output signal	Total number digital, analog outputs: 14 Digital: Can be assigned to inverter [Y1] to [Y4], [Y5AC], [30ABC], OPC-DO option card [O1] to [O8] Analog: inverter [FM1], [FM2], [FMP]			
User-defined alarms	Dedicated customizable logic alarms: 5 The inverter is stopped following an alarm, or a warning only can be output while the inverter continues to run (when warning assigned).			

Item		Specification
Customizable logic processing cycle	Single task	1 ms (max. 10 steps), 2 ms (max. 20 steps), 5 ms (max. 50 steps), 10 ms (max. 100 steps), 20 ms (max. 260 steps): The cycle can be selected with function code U100, but it is dependent on the maximum number of steps. (1) All external input signals up to the maximum step are latched at the beginning of the processing cycle to maintain synchronism. (2) Calculations are performed in order from step 1 to the maximum step. The calculation cycle differs depending on the number of steps. (3) If output for a certain step is input to the next step, output for steps with high processing priority can be used with low priority steps in the same cycle. (4) 14 customizable logic output signals (CLO1 to 14) are updated simultaneously at the end of the processing cycle.
	Multi-task	1 ms (max. 10 steps), 2 ms (max. 10 steps), 5 ms (max. 30 steps), 10 ms (max. 50 steps), 20 ms (max. 100 steps): (1) External input signals corresponding to all customizable logics for steps 1 to 200 are latched at the beginning of each cycle to maintain synchronism. (2) Calculation for the prescribed number of steps is repeatedly carried out every 1 ms/2 ms/5 ms/10 ms/20 ms cycle. (3) If output for a certain step is input to the next step, output for steps with high processing priority can be used with low priority steps in the same cycle. (4) If outputting the 14 customizable logic output signals (CLO1 to 14) from a step for a different cycle, updating and outputting are performed for each cycle in which the step is executed.
Customizable logic cancellation command “CLC”		By assigning “CLC” to digital input terminal [X] and turning it ON, all customizable logic operations can be stopped. It is used when you want to deactivate the customizable logic temporarily.
Customizable logic timer cancellation command “CLTC”		By assigning “CLTC” to digital input terminal [X] and turning it ON, all timers, counters, and previous values used with customizable logic are reset. It is used when a customizable logic is changed or if you want to synchronize it with external sequence.

Note

If you use the customizable logic cancellation command and customizable logic timer cancellation command, the inverter can unintentionally start because the speed command is unmasked, depending on the structure of the customizable logic. Be sure to turn OFF the operation command to turn it ON.

Failure to observe this could result in injury.

Failure to observe this could result in failure.

FUNCTION
F Codes
E Codes
C Codes
P Codes
H Codes
A Codes
b Codes
r Codes
J Codes
d Codes
U Codes
y Codes
K Codes

■ Block diagram

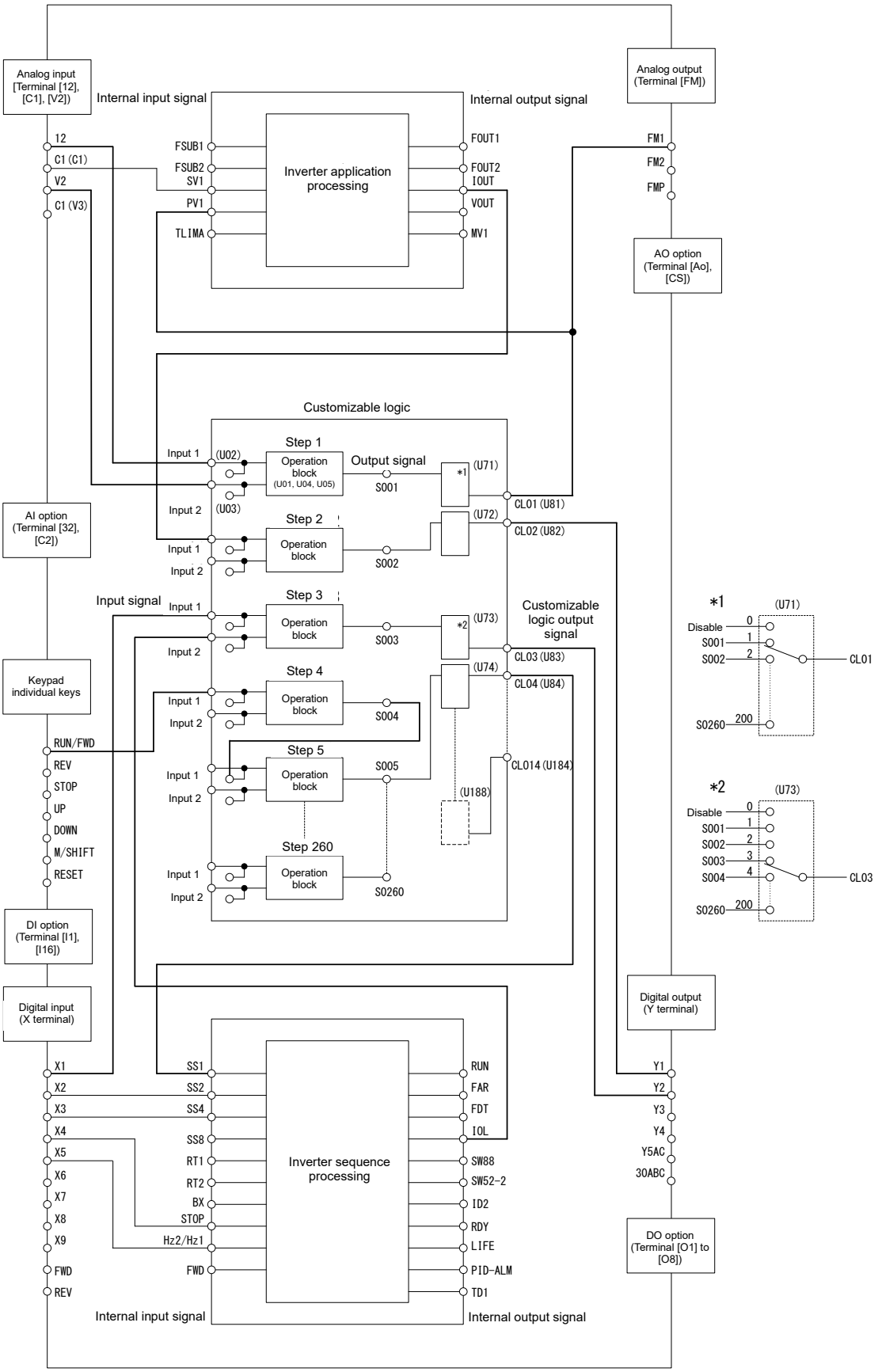

Note

Mode selection function codes for enabling customizable logic can be modified during operation but the customizable logic output may become temporarily unstable due to the setting modification. Therefore, since unexpected operation can be performed, change the settings if possible when the inverter is stopped.

Failure to observe this could result in injury or failure.

U00	**Customizable logic (Operation selection)**
U01 to U70	**Customizable logic: Step 1 to 14 (Block selection, Input 1/2, Function 1/2)**
U71 to U80	**Customizable logic: Output signal 1 to 10 (Output selection)**
U81 to U90	**Customizable logic: Output signal 1 to 10 (Function selection)**
U91	**Customizable logic: Customizable logic timer monitor (Step selection)**
U92 to U97	**Customizable logic: Conversion factor**
U100	**Customizable logic: Task process cycle setting**
U101 to U106	**Customizable logic: Conversion operation point 1 (X, Y) to 3 (X, Y)**
U107	**Customizable logic: Automatic calculation of coefficients**
U121 to U170	**Customizable logic: User parameter 1 to 50**
U171 to U180	**Customizable logic: Storage area 1 to 10**
U181 to U184	**Customizable logic: Output signal 11 to 14 (Function selection)**
U185 to U188	**Customizable logic: Output signal 11 to 14 (Output selection)**
U190 to U195	**Customizable logic: Step 15 to 260 setting**

■ Customizable Logic (Operation selection) (U00)

U00 specifies whether to enable the sequence configured with the customizable logic function or disable it to run the inverter only via its input terminals or others.

U00 data	Function
0	Disable
1	Enable (Customizable logic operation)

The ECL alarm occurs when changing U00 from 1 to 0 during operation.

■ Customizable Logic (Mode Setting) (U01 to U70, U190 to U195)

In the customizable logic, the steps are categorized in the following three types:

[Input: digital] Block selection (U01, U06, U11, etc.) = 1 to 1999

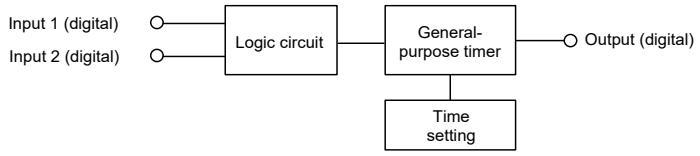

[Input: analog] Block selection (U01, U06, U11, etc.) = 2001 to 3999

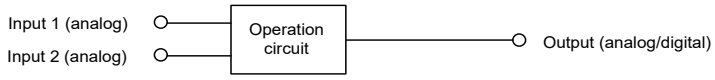

[Input: digital, analog] Block selection (U01, U06, U11, etc.) = 4001 to 5999

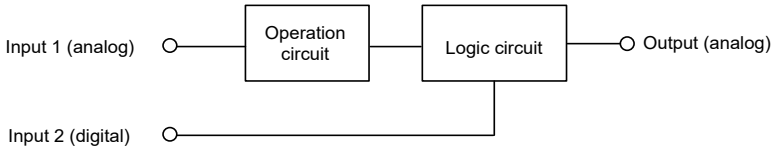

FUNCTION
F Codes
E Codes
C Codes
P Codes
H Codes
A Codes
b Codes
r Codes
J Codes
d Codes
U Codes
y Codes
K Codes

The function code settings for each step are as follows:

- Step 1 to 14

Step No.	Block selection	Input 1	Input 2	Function 1	Function 2	Output Note)
Step 1	U01	U02	U03	U04	U05	“SO01”
	= 1 to 1999	Digital input 1	Digital input 2	Time setting	Not required	Digital output
	= 2001 to 3999	Analog input 1	Analog input 2	Value 1	Value 2	Analog/digital output
	= 4001 to 6999	Analog input 1	Digital input 2	Value 1	Value 2	Analog output
Step 2	U06	U07	U08	U09	U10	“SO02”
Step 3	U11	U12	U13	U14	U15	“SO03”
Step 4	U16	U17	U18	U19	U20	“SO04”
Step 5	U21	U22	U23	U24	U25	“SO05”
Step 6	U26	U27	U28	U29	U30	“SO06”
Step 7	U31	U32	U33	U34	U35	“SO07”
Step 8	U36	U37	U38	U39	U40	“SO08”
Step 9	U41	U42	U43	U44	U45	“SO09”
Step 10	U46	U47	U48	U49	U50	“SO10”
Step 11	U51	U52	U53	U54	U55`	“SO11”
Step 12	U56	U57	U58	U59	U60	“SO12”
Step 13	U61	U62	U63	U64	U65	“SO13”
Step 14	U66	U67	U68	U69	U70	“SO14”

Note) Output is not a function code. It indicates the output signal symbol.

• Step 15 to 260

Specify a step number in U190, and set the block selection, input 1, input 2, function 1, function 2 in U191 to U195 respectively.

Step No.	U190	Block selection	Input 1	Input 2	Function 1	Function 2	Output
Step 15	15	U191	U192	U193	U194	U195	“SO15”
Step 16	16						“SO16”
...	...						...
Step 259	259						“SO259”
Step 260	260						“SO260”

[Input: digital] Block function code setting

■ **Block selection (U01 etc.)**

Any of the following items can be selected as a logic function block (with general-purpose timer): Select the time type with first digit, and select the logic circuit with the tenth digit hundredth digit.

The data can be logically inverted by adding 1000.

Function data	Logic function block	Description
0	No function assigned	Output is always OFF.
10	Through output + General-purpose timer (No timer)	Only a general-purpose timer. No logic function block exists.
11	(On-delay timer)	Turning the input signal ON starts the on-delay timer. When the period specified by the timer has elapsed, the output signal turns ON. Turning the input signal OFF turns the output signal OFF.
12	(Off-delay timer)	Turning the input signal ON turns the output signal ON. Turning the input signal OFF starts the off-delay timer. When the period specified by the timer has elapsed, the output signal turns OFF.
13	(One-shot pulse output)	Turning the input signal ON issues a one-shot pulse whose length is specified by the timer.
14	(Retriggerable timer)	Turning the input signal ON issues a one-shot pulse whose length is specified by the timer. If the input signal is turned ON again during the preceding one-shot pulse length, however, the logic function block issues another one-shot pulse.
15	(Pulse train output)	If the input signal turns ON, the logic function block issues ON and OFF pulses (whose lengths are specified by the timer) alternately and repeatedly. This function is used to flash a luminescent device.
20 to 25	Logical AND + general-purpose timer	AND function with 2 inputs and 1 output, plus general-purpose timer.
30 to 35	Logical OR + general-purpose timer	OR function with 2 inputs and 1 output, plus general-purpose timer.
40 to 45	Logical XOR + general-purpose timer	XOR function with 2 inputs and 1 output, plus general-purpose timer.
50 to 55	Set priority flip-flop + general-purpose timer	Set priority flip-flop with 2 inputs and 1 output, plus general-purpose timer. The initial output status can be specified with function 2. (0: OFF, other than 0: ON)
60 to 65	Reset priority flip-flop + general-purpose timer	Reset priority flip-flop with 2 inputs and 1 output, plus general-purpose timer. The initial output status can be specified wiith function 2. (0: OFF, other than 0: ON)
70, 72, 73	Rising edge detector + general-purpose timer	Rising edge detector with 1 input and 1 output, plus general-purpose timer. This detects the rising edge of an input signal and outputs the ON signal for 1 ms (*1).
80, 82, 83	Falling edge detector + general-purpose timer	Falling edge detector with 1 input and 1 output, plus general-purpose timer. This detects the falling edge of an input signal and outputs the ON signal for 1 ms (*1).
90, 92, 93	Rising & falling edges detector + general-purpose timer	Rising and falling edge detector with 1 input and 1 output, plus general-purpose timer. This detects both the falling and rising edges of an input signal and outputs the ON signal for 1 ms (*1).
100 to 105	Hold + general-purpose timer	Hold function of previous values of 2 inputs and 1 output, plus general-purpose timer. If the hold control signal is OFF, the logic function block outputs input signals; if it is ON, the logic function block retains the previous values of input signals.

*1: Equals the task cycle: 1 ms for a task cycle of 1 ms, 2 ms for 2 ms, 5 ms for 5 ms, 10 ms for 10 ms, and 20 ms for 20 ms.

FUNCTION
F Codes
E Codes
C Codes
P Codes
H Codes
A Codes
b Codes
r Codes
J Codes
d Codes
U Codes
y Codes
K Codes

Function data	Logic function block	Description
110	Increment counter	Increment counter with reset input. By the rising edge of the input signal, the logic function block increments the counter value by one. When the counter value reaches the target one, the output signal turns ON. Turning the reset signal ON resets the counter to zero.
120	Decrement counter	Decrement counter with reset input. By the rising edge of the input signal, the logic function block decrements the counter value by one. When the counter value reaches zero, the output signal turns ON. Turning the reset signal ON resets the counter to the initial value.
130	Timer with reset input	Timer output with reset input. If the input signal turns ON, the output signal turns ON and the timer starts. When the period specified by the timer has elapsed, the output signal turns OFF, regardless of the input signal state. Turning the reset signal ON resets the current timer value to zero and turns the output OFF.
140 to 145	D flip-flop + general-purpose timer	2 input 1 output D flip-flop and general-purpose timer Reflects the input 1 signal status to the output signal at the input 2 signal rising edge. The initial output status can be specified with function 2. (0: OFF, other than 0: ON)
150 to 155	T flip-flop + general-purpose timer	1 input 1 output T flip-flop and general-purpose timer Inverts the output signal at the input signal rising edge. The initial output status can be specified with function 2. (0: OFF, other than 0: ON)

The data can be logically inverted by adding 1000.

The block diagrams for individual functions are given below.

(Data=1□) Through output

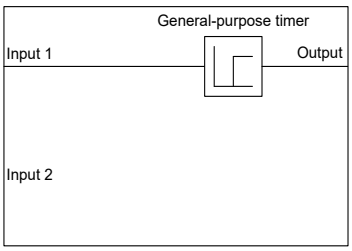

(Data=2□) Logical AND

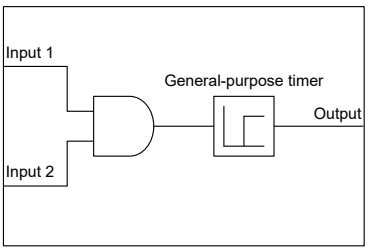

(Data=3□) Logical OR

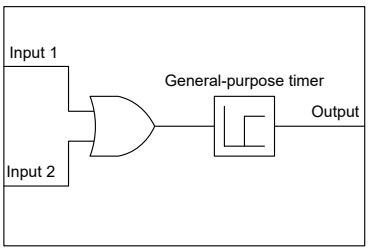

(Data=4□) Logical XOR

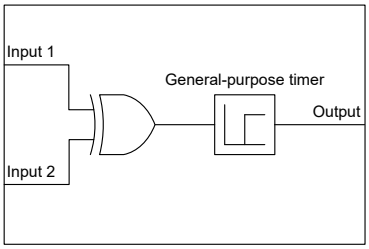

(Data=5□) Set priority flip-flop

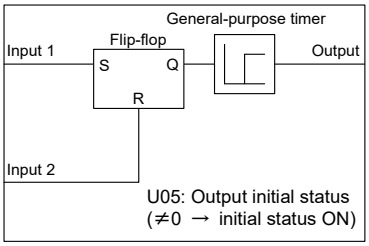

Input 1	Input 2	Previous output	Output	Remarks
OFF	OFF	OFF	OFF	Hold previous value
		ON	ON	
	ON	-	OFF	
ON	-	-	ON	Set priority

(Data=6□) Reset priority flip-flop

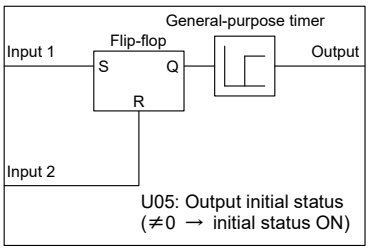

Input 1	Input 2	Previous output	Output	Remarks
OFF	OFF	OFF	OFF	Hold previous value
		ON	ON	
-	ON	-	OFF	Reset priority
ON	OFF	-	ON	

(Data=7□) Rising edge detector

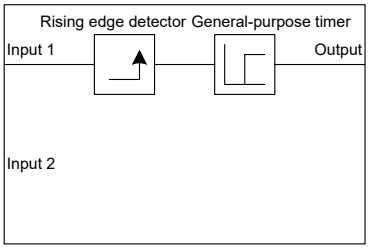

(Data=8□) Falling edge detector

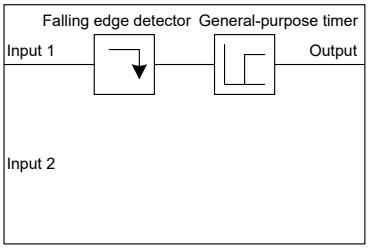

(Data=9□) Rising & falling edges detector

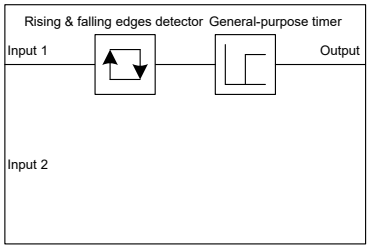

(Data=10□) Hold

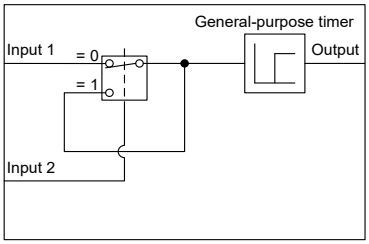

(Data=110) Increment counter

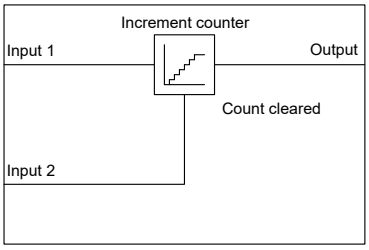

(Data=120) Decrement counter

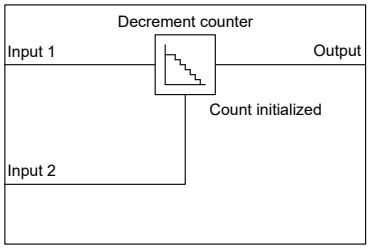

(Data=130) Timer with reset input

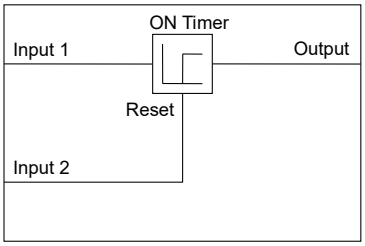

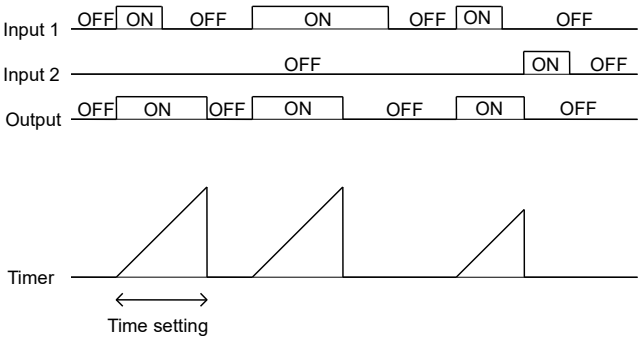

(Data=14□) D flip-flop

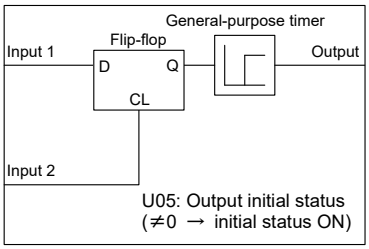

(Data=15□) T flip-flop

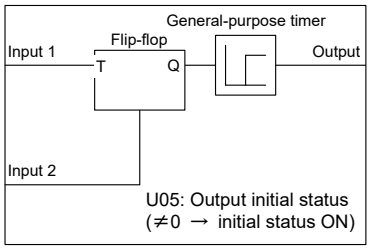

FUNCTION
F Codes
E Codes
C Codes
P Codes
H Codes
A Codes
b Codes
r Codes
J Codes
d Codes
U Codes
y Codes
K Codes

■ Operation of general-purpose timer

The operation schemes for individual timers are shown below.

(End 1) On-delay timer

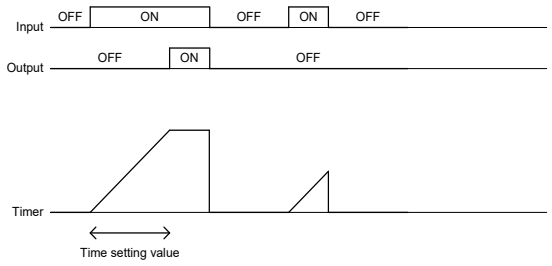

(End 2) Off-delay timer

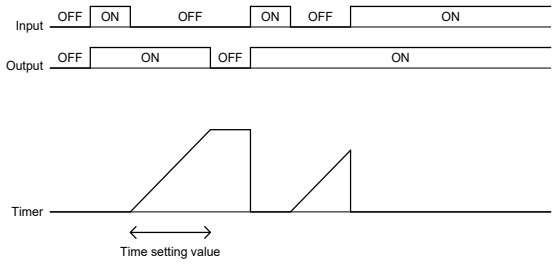

(End 3) One-shot pulse output

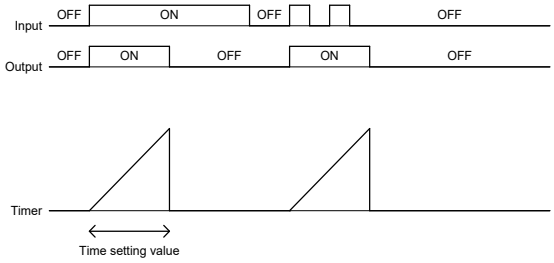

(End 4) Retriggerable timer

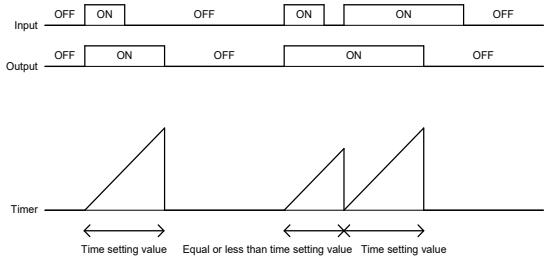

(End 5) Pulse train output

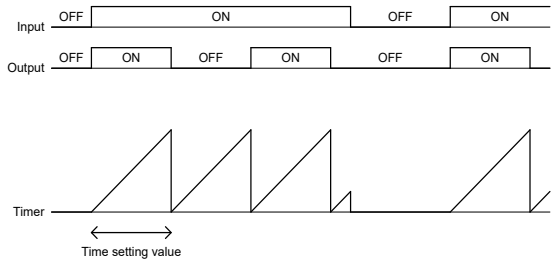

■ **Inputs 1 and 2 (U02, U03, etc.)**

The following digital signals are available as input signals. Value in ( ) is in negative logic.

Function data	Selectable signals
0000 (1000) to 0251 (1251)	Digital output signals (Same as the ones specified by function code E20, e.g., “RUN” (Inverter running), FAR (Frequency (speed) arrival signal), “FDT” (Frequency (speed) detected), “LU” (Undervoltage detected (Inverter stopped), etc.) 27 (Universal DO) is not available. Customizable logic output signals from 111 (1111) to 124 (1124) cannot be selected. 100 means that no function is assigned.
2001 (3001)	Step output 1 “SO01”
to	to
2260 (3260)	Output of step 260 “SO260”
4001 (5001)	Terminal [X1] input “X1” (terminal block or communication command)
4002 (5002)	Terminal [X2] input “X2” (terminal block or communication command)
4003 (5003)	Terminal [X3] input “X3” (terminal block or communication command)
4004 (5004)	Terminal [X4] input “X4” (terminal block or communication command)
4005 (5005)	Terminal [X5] input “X5” (terminal block or communication command)
4006 (5006)	Terminal [X6] input “X6” (terminal block or communication command)
4007 (5007)	Terminal [X7] input “X7” (terminal block or communication command)
4008 (5008)	Terminal [X8] input “X8” (terminal block or communication command)
4009 (5009)	Terminal [X9] input “X9” (terminal block or communication command)
4010 (5010)	Terminal [FWD] input “FWD”(terminal block or communication command)
4011 (5011)	Terminal [REV] input “REV”(terminal block or communication command)
4021 (5021)	Terminal [I1] input “I1” (option card OPC-DI)
4022 (5022)	Terminal [I2] input “I2” (option card OPC-DI)
4023 (5023)	Terminal [I3] input “I3” (option card OPC-DI)
4024 (5024)	Terminal [I4] input “I4” (option card OPC-DI)
4025 (5025)	Terminal [I5] input “I5” (option card OPC-DI)
4026 (5026)	Terminal [I6] input “I6” (option card OPC-DI)
4027 (5027)	Terminal [I7] input “I7” (option card OPC-DI)
4028 (5028)	Terminal [I8] input “I8” (option card OPC-DI)
4029 (5029)	Terminal [I9] input “I9” (option card OPC-DI)
4030 (5030)	Terminal [I10] input “I10” (option card OPC-DI)
4031 (5031)	Terminal [I11] input “I11” (option card OPC-DI)
4032 (5032)	Terminal [I12] input “I12” (option card OPC-DI)
4033 (5033)	Terminal [I13] input “I13” (option card OPC-DI)
4034 (5034)	Terminal [I14] input “I14” (option card OPC-DI)
4035 (5035)	Terminal [I15] input “I15” (option card OPC-DI)
4036 (5036)	Terminal [I16] input “I16” (option card OPC-DI)
4041 (5041)	By assigning input signals “CLI1” to “CLI9” to customizable logic inputs, switching is possible between terminals [X1] to [X9] simply by changing the E01 to E09 assignment without having to change created customizable logic. This can be used when necessary to switch signal lines. Terminal [CLI1] input “CLI1”
4042 (5042)	Terminal [CLI2] input “CLI2”
4043 (5043)	Terminal [CLI3] input “CLI3”
4044 (5044)	Terminal [CLI4] input “CLI4”
4045 (5045)	Terminal [CLI5] input “CLI5”
4046 (5046)	Terminal [CLI6] input “CLI6”

FUNCTION
F Codes
E Codes
C Codes
P Codes
H Codes
A Codes
b Codes
r Codes
J Codes
d Codes
U Codes
y Codes
K Codes

Function data	Selectable signals
4047 (5047)	Terminal [CLI7] input “CLI7”
4048 (5048)	Terminal [CLI8] input “CLI8”
4049 (5049)	Terminal [CLI9] input “CLI9”
4081 (5081)	Logic operations can be performed and stopped when triggered by keypad key operations. Keypad RUN/FWD key “KP-RUN/KP-FWD”
4082 (5082)	Keypad REV key "KP-REV"
4083 (5083)	Keypad STOP key "KP-STOP"
4084 (5084)	Keypad UP key "KP-UP"
4085 (5085)	Keypad DOWN key "KP-DOWN"
4088 (5088)	Keypad M/SHIFT key "KP-M/SHIFT"
4091 (5091)	Keypad RESET key "KP-RESET"
4101 (5101)	Terminal [X1] input (terminal block only) “X1-TERM”
4102 (5102)	Terminal [X2] input (terminal block only) “X2-TERM”
4103 (5103)	Terminal [X3] input (terminal block only) “X3-TERM”
4104 (5104)	Terminal [X4] input (terminal block only) “X4-TERM”
4105 (5105)	Terminal [X5] input (terminal block only) “X5-TERM”
4106 (5106)	Terminal [X6] input (terminal block only) “X6-TERM”
4107 (5107)	Terminal [X7] input (terminal block only) “X7-TERM”
4108 (5108)	Terminal [X8] input (terminal block only) “X8-TERM”
4109 (5109)	Terminal [X9] input (terminal block only) “X9-TERM”
4110 (5110)	Terminal [FWD] input (terminal block only) “FWD-TERM”
4111 (5111)	Terminal [REV] input (terminal block only) “REV-TERM”
6000 (7000)	Final RUN command “FL_RUN” (ON when a run command is given)
6001 (7001)	Final FWD run command “FL_FWD” (ON when a run forward command is given)
6002 (7002)	Final REV run command “FL_REV” (ON when a run reverse command is given)
6003 (7003)	During acceleration “DACC” (ON during acceleration)
6004 (7004)	During deceleration “DDEC” (ON during deceleration)
6005 (7005)	Under anti-regenerative control “REGA” (ON under anti-regenerative control)
6006 (7006)	Within dancer reference position “DR_REF” (ON when the dancer position is within the reference range)
6007 (7007)	Alarm factor presence “ALM_ACT” (ON when there is no alarm factor)
6100	TRUE (1) fixed input “TRUE”: always ON No logic inversion
6101	FALSE (0) fixed input “FALSE”: always OFF No logic inversion

■ **Function 1 (U04 etc.)**

U04 and other related function codes specify the general-purpose timer period or the increment/decrement counter value.

Function data	Function	Description
0.00 to +600.00	Timer	The period is specified in seconds.
	Counter value	The specified value is multiplied by 100 times. (If 0.01 is specified, it is converted to 1.)
-9990.00 to -0.01	-	The timer or counter value works as 0.00. (No timer)
+601.00 to +9990.00	Timer	The period is specified in seconds.

[Input: analog] Block function code setting

■ **Block selection, function 1, function 2 (U01, U04, U05, etc.)(Analog)**

The following items are available as operation circuits.

If the upper and lower limit values are the same, they will be limited in the -9990 to 9990 range.

Block selection (U01 etc.)	Operation circuit	Description	Function 1 (U04 etc.)	Function 2 (U05 etc.)
2001	Adder	Inputs 1 and 2 are added and output. The upper limit value and lower limit value can be set with function 1 and 2.	Upper limit	Lower limit
2002	Subtracter	Subtraction function with two inputs (input 1 and input 2). This function has output limiters (upper/lower) specified with two function codes. The 1st function code provides upper limit value and the 2nd one provides lower limit value.	Upper limit	Lower limit
2003	Multiplier	Multiplication function with two inputs (input 1 and input 2). This function has output limiters (upper/lower) specified with two function codes. The 1st function code provides upper limit value and the 2nd one provides lower limit value.	Upper limit	Lower limit
2004	Divider	Input 1 is divided by input 2 and output. This function has output limiters (upper/lower) specified with two function codes. The 1st function code provides upper limit value and the 2nd one provides lower limit value.	Upper limit	Lower limit
2005	Limiter	An upper/lower limiter is applied to input 1. This function has output limiters (upper/lower) specified with two function codes. The 1st function code provides upper limit value and the 2nd one provides lower limit value. If the upper and lower limit values are the same, the input value is output as is (limited in -9990 to 9990 range).	Upper limit	Lower limit
2006	Absolute value	Absolute value function of single input (input 1). Negative input numbers become positive. This function has output limiters (upper/lower) specified with two function codes. The 1st function code provides upper limit value and the 2nd one provides lower limit value.	Upper limit	Lower limit
2007	Inverting adder	Inverting addition function with single input (input 1). This function subtracts the input 1 to the value specified with the 1st function code, inverts the result. And furthermore, the function adds the result to the value specified with the 2nd function code and outputs the result.	Subtraction value (former)	Addition value (latter)
2008	Variable limiter	Input 1 is output as the upper limit value, and input 2 is output as the lower limit value for the step specified with function 1. The lower limit value is not used if the upper limit value is less than the lower limiter.	Step number	Not required
2009	Linear function (Constant setting)	Linear function of single input (input 1). Set with KA as function 1, and KB as function 2. The output is limited within the range between -9990 and 9990 by the internal limiter. $y = K_A \times \chi + K_B$ If setting a constant, set KA = 0.0, and set a constant for KB.	Factor KA - 9990.0 to +9990.0	Factor KB - 9990.0 to +9990.0

FUNCTION
F Codes
E Codes
C Codes
P Codes
H Codes
A Codes
b Codes
r Codes
J Codes
d Codes
U Codes
y Codes
K Codes

Block selection (U01 etc.)	Operation circuit	Description	Function 1 (U04 etc.)	Function 2 (U05 etc.)
2010	Remainder calculation	Outputs the remainder when input 1 is divided by input 2. This function has output limiters (upper/lower) specified with two function codes. The 1st function code provides upper limit value and the 2nd one provides lower limit value.	Upper limit	Lower limit
2011 *101	Limiter 2	Applies an upper/lower limiter for both positive and negative values to input 1. The upper limit and lower limit values are set with functions 1 and 2. If the upper and lower limit values are the same, the input value is output as is. (limited in -9990 to 9990 range).	Upper limit	Lower limit
2013 *101	Dead zone	A non-responsive area (output is 0) is applied to input 1. The upper limit and lower limit values are set with functions 1 and 2.	Upper limit	Lower limit
2051	Comparator 1	Subtracts input 2 from input 1, and ON is output if equal to or higher than the deviation set with function 1, and OFF is output if less than the deviation. The 2nd function code provides hysteresis width. ON is output if both the ON and OFF conditions are established.	Deviation	Hysteresis width
2052	Comparator 2	Subtracts input 2 from input 1, and ON is output if greater than the deviation set with function 1, and OFF is output if smaller than the deviation (not including equal sign). The 2nd function code provides hysteresis width.	Deviation	Hysteresis width
2053	Comparator 3	Subtracts input 2 from input 1 to obtain an absolute value, and ON is output if equal to or higher than the deviation set with function 1, and OFF is output if less than the deviation. The 2nd function code provides hysteresis width. ON is output if both the ON and OFF conditions are established.	Deviation	Hysteresis width
2054	Comparator 4	Subtracts input 2 from input 1 to obtain an absolute value, and ON is output if greater than the deviation set with function 1, and OFF is output if smaller than the deviation (not including equal sign). The 2nd function code provides hysteresis width.	Deviation	Hysteresis width
2055	Comparator 5	Input 1 is compared with the function 1 setting value, and ON is output if input 1 is equal to or higher than the function 1 setting value, and OFF is output if input 1 is smaller. The 2nd function code provides hysteresis width.	Threshold value	Hysteresis width
2056	Comparator 6	Input 1 is compared with the function 1 setting value, and ON is output if input 1 is less than the function 1 setting value, and OFF is output if input 1 is larger. The s hysteresis width can be set with function 2, but functions only when OFF conditions are met.	Threshold value	Hysteresis width
2057	Comparator 7	Subtracts input 2 from input 1, and ON is output if greater than the deviation set with function 1, and OFF is output if less than the deviation (including equal sign). The 2nd function code provides hysteresis width.	Deviation	Hysteresis width
2058	Comparator 8	Subtracts input 2 from input 1 to obtain an absolute value, and ON is output if greater than the deviation set with function 1, and OFF is output if less than the deviation (including equal sign). The 2nd function code provides hysteresis width.	Deviation	Hysteresis width

Block selection (U01 etc.)	Operation circuit	Description	Function 1 (U04 etc.)	Function 2 (U05 etc.)
2059	Equivalent comparator 2	Subtracts input 2 from input 1 to obtain an absolute value, and OFF is output if greater than the hysteresis width set with function 2, and ON is output if less than the hysteresis width (including equal sign).	Not required	Hysteresis width
2060 *101	Comparator 9	Subtracts input 2 from input 1, and if the result is equal to or higher (incl. equal sign) than the deviation set with function 1, and if less than the deviation, OFF is output. The hysteresis width can be set with function 2.	Deviation	Hysteresis width
2071	Window comparator 1	ON is output if input 1 is within the upper threshold and lower threshold range (incl. threshold). The upper threshold is set with function 1, and the lower threshold is set with function 2.	Upper threshold	Lower threshold
2072	Window comparator 2	ON is output if input 1 is within the upper threshold value and lower threshold ranges (not including threshold values). Set with the upper threshold as function 1, and the lower threshold as function 2.	Upper threshold	Lower threshold
2101	High selector	Input 1 and input 2 are compared, and the larger of the two is output. The 1st function code provides the upper limit value and the 2nd one provides the lower one.	Upper limit	Lower limit
2102	Low selector	Input 1 and input 2 are compared, and the smaller of the two is output. The 1st function code provides the upper limit value and the 2nd one provides the lower one.	Upper limit	Lower limit
2103	Average of inputs	This function receives two inputs (input 1 and input 2), averages them, and outputs the result. The 1st function code provides the upper limit value and the 2nd one provides the lower one.	Upper limit	Lower limit
2151	Function code	Function code S13 (PID command value): The scale for setting value 0 to 20000/0 to 100% is converted with the maximum scale and minimum scale. The 1st function code provides the maximum scale value of the range and the 2nd one provides the minimum scale value of the range.	Maximum scale	Minimum scale
2201	Clip and map function	This function receives single input (input 1), clips a pre-selected range which is specified with two function codes from it, maps 0.00 to 100.00%, and outputs the result. The 1st function code provides the maximum scale value of the range and the 2nd one provides the minimum scale value of the range. Use this to connect to analog output terminals. This function can only be assigned to a maximum of 2 steps.	Maximum scale	Minimum scale
2202	Scale converter	The input 1 scale is converted from the minimum scale and maximum scale, and 0 to 100% is used for the minimum scale to maximum scale. The 1st function code provides the maximum scale value of the range and the 2nd one provides the minimum scale value of the range. The input 1 signal selection can only be used for setting value 8000 to 8021. This function can only be assigned to a maximum of 2 steps.	Maximum scale	Minimum scale
3001	Quadratic function	Input 1 is converted and output with the following formula. KA, KB, and KC are in exponential form, and are set for U92 to U97. Output = KA x (input 1)^2 + KB x input 1 + KC The 1st function code provides the upper limit value and the 2nd one provides the lower limit value. Either (3001) or (3002) is available to use, and only one of these functions can be used.	Upper limit	Lower limit

FUNCTION
F Codes
E Codes
C Codes
P Codes
H Codes
A Codes
b Codes
r Codes
J Codes
d Codes
U Codes
y Codes
K Codes

Block selection (U01 etc.)	Operation circuit	Description	Function 1 (U04 etc.)	Function 2 (U05 etc.)
3002	Square root function	Input 1 is converted and output with the following formula. KA, KB, and KC are in exponential form, and are set for U92 to U97. Output = $\sqrt{\frac{\text{Input } 1 + K_A}{K_B}} \times K_C$ The 1st function code provides the upper limit value and the 2nd one provides the lower limit value. Either (3001) or (3002) is available to use, and only one of these functions can be used.	Upper limit	Lower limit

*101: Supported with ROM0500 or later.

The block diagrams for each operation circuit are given below. The setting value for functions 1 and 2 is indicated with U04 and U05

(2001) Adder

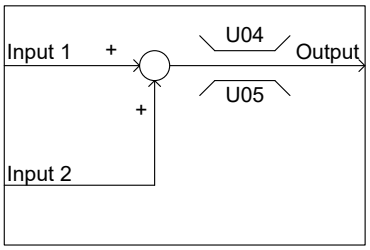

(2002) Subtracter

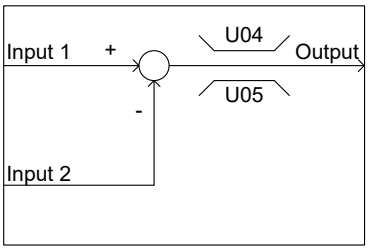

(2003) Multiplier

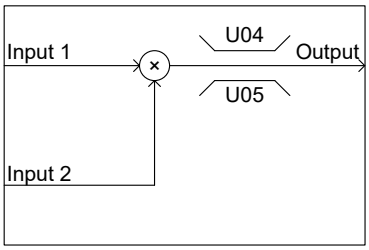

(2004) Divider

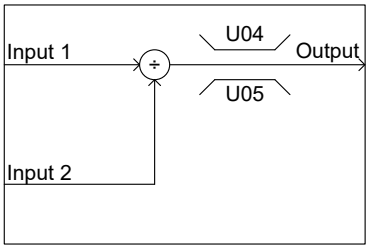

(2005) Limiter

(2006) Absolute value of inputs

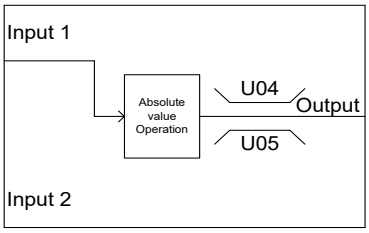

(2007) Inverting adder

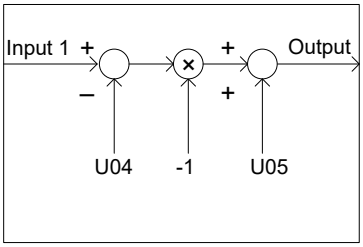

(2008) Variable limiter

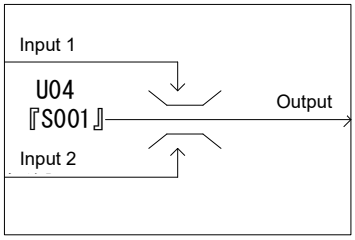

(2009) Linear function

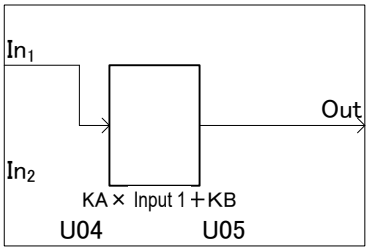

(2010) Remainder

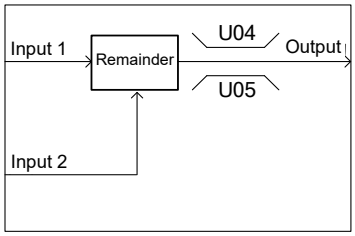

(2011) Limiter 2 *101

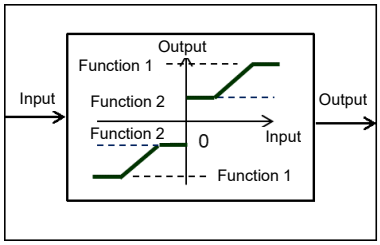

(2013) Dead zone *101

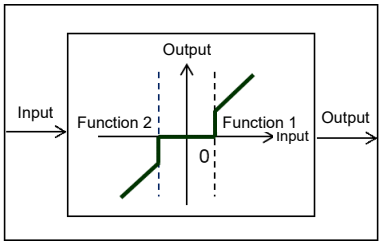

(2051) Comparator 1

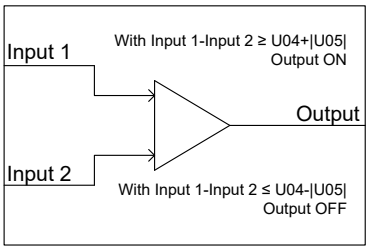

(2052) Comparator 2

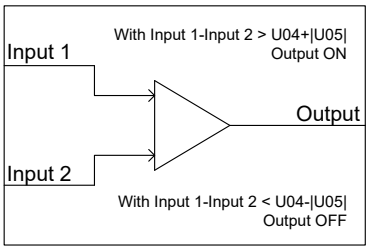

(2053) Comparator 3

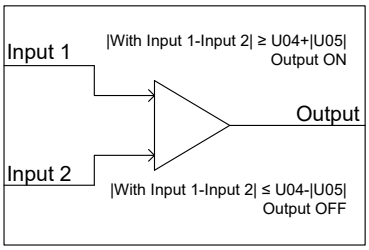

ON is prioritized when both conditions are satisfied.

ON is prioritized when both conditions are satisfied.

*101: Supported with ROM0500 or later.

FUNCTION
F Codes
E Codes
C Codes
P Codes
H Codes
A Codes
b Codes
r Codes
J Codes
d Codes
U Codes
y Codes
K Codes

(2054) Comparator 4

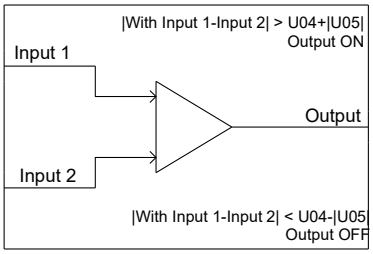

(2055) Comparator 5

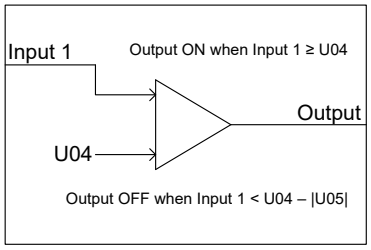

(2056) Comparator 6

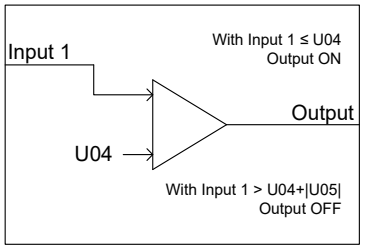

(2057) Comparator 7

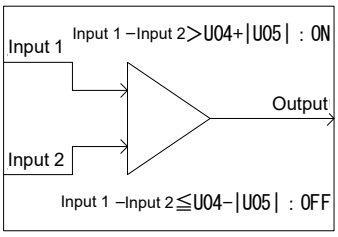

(2058) Comparator 8

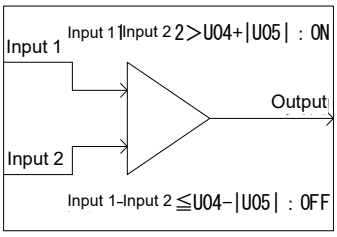

(2059) Equivalent comparator 2

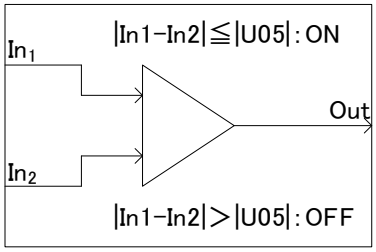

(2060) Comparator 9

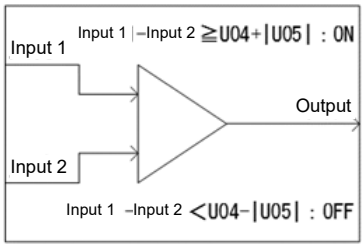

(2071) Window comparator 1

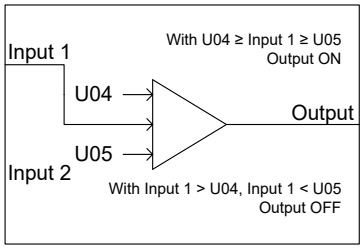

(2072) Window comparator 2

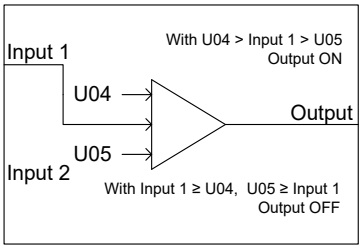

(2101) High selector

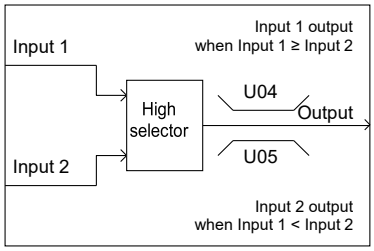

(2102) Low selector

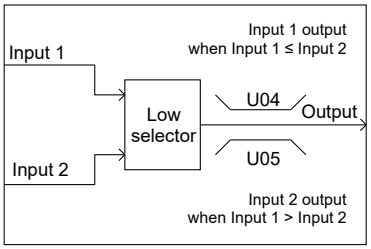

(2103) Average of inputs

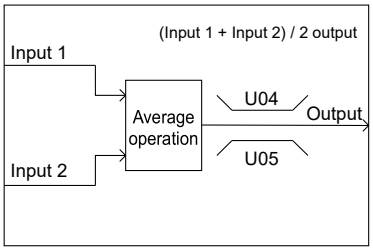

(2151) Function code input

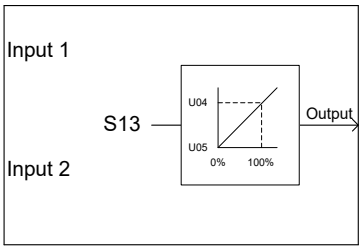

(2201) Scale inverse converter

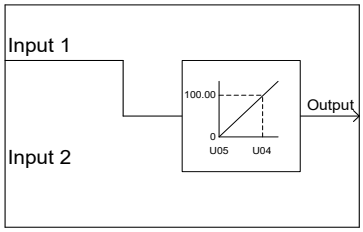

* Use this to connect to analog output terminals.
* Up to 2 steps can be used.

(2202) Scale converter

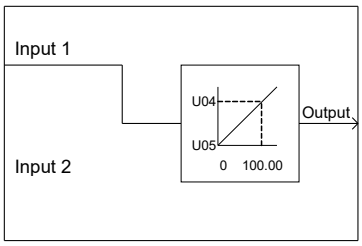

* The input 1 signal selection can only be used for setting value 8000 to 8085.
* Up to 2 steps can be used.

(3001) Quadratic function

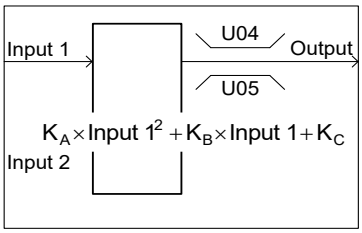

(3002) Square root function

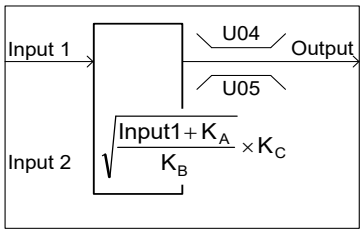

* Either (3001) or (3002) is available to use, and only one of these functions can be used.

*101: Supported with ROM0500 or later.

FUNCTION
F Codes
E Codes
C Codes
P Codes
H Codes
A Codes
b Codes
r Codes
J Codes
d Codes
U Codes
y Codes
K Codes

■ **Inputs 1 and 2 (U02, U03, etc.)**

The following signals are available as analog input signals.

Function data	Selectable signals
8000 to 8026	General-purpose analog output signal (same as analog output signals selected in function code F31: output frequency 1, output current, output torque, power consumption, DC intermediate circuit voltage, etc.) Example: For output frequency 1, maximum output frequency (100 %) is input as 100.00. Example: For output current, 200 % of the inverter rated current is input 100.00. Note: 10 (Universal AO) is not available.
2001 to 2260	Step 1 to 260 output “SO01” to “SO260”
9001	Analog [12] terminal input signal “12”
9002	Analog [C1] terminal input signal (C1 function) “C1”
9003	Analog [V2] terminal input signal “V2”
9004	Analog [32] terminal input signal “32” (option card, OPC-AIO)
9005	Analog [C2] terminal input signal “C2” (option card, OPC-AIO)
9006	Temperature detection PT Ch1 “PT1”(option card, OPC-PT） *101
9007	Temperature detection PT Ch2 “PT2”(option card, OPC-PT） *101
9006,9007	Reserved
9008	Analog [C1] terminal input signal (V3 function) “V3”
9010	UP/DOWN value (when UP/DOWN command valid)『UP/DOWN』

*101: Supported with ROM0500 or later.

■ **Function 1, Function 2 (U04, U05, etc.)**

Sets the upper limit and lower limit of operation circuit.

Function data	Function	Description
-9990.00 to 0.00 to +9990.00	Reference value Hysteresis width Upper limit Lower limit Upper threshold Lower threshold Setting value Maximum scale Minimum scale	Setting values for the operation circuit (selected with the corresponding function code such as U01).

■ **Conversion factor setting (U92 to U97)**

Sets the factor of conversions function (3001, 3002) of operation circuit.

Function code	Name	Data setting range	Factory default
U92	Mantissa of K_A	Mantissa: -9.999 to 9.999 Exponent part: -5 to 5	0.000
U93	Exponent part of K_A		0
U94	Mantissa of K_B		0.000
U95	Exponent part of K_B		0
U96	Mantissa of K_c		0.000
U97	Exponent part of K_c		0

U92 to U97 can automatically be calculated based on measured data. For details, refer to the descriptions of U101 to U107.

[Input: digital, analog] Block function code setting

■ **Block selection, function 1, function 2 (U01, U04, U05, etc.)(Analog)**

The following items are available as operation circuits and logic circuits.

Note that if the upper and lower limits have the same value, there are no upper and lower limits.

Block selection (U01 etc.)	Description	Block diagram	Function 1, Function 2 (U04, U05, etc.)
4001 Hold	When input 2 (digital input) is “1”, input 1 (analog input) is output as is. When input 2 is 0, the output value is held. This function has output limiters (upper/lower) specified with two function codes. The 1st function code provides upper limit value and the 2nd one provides lower limit value.	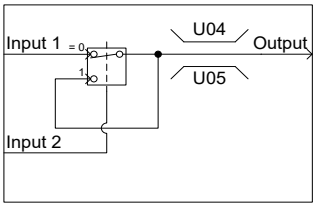	Function 1: Upper limit value Function 2: Lower limit value
4002 Inverting adder Switching	When input 2 (digital input) is 1, the function 1 setting value is subtracted from input 1 (analog input), the polarity is reversed, and the function 2 setting value is added and output. When input 2 is 0, input 1 is output as is. Output involves limiter processing in the -9990 to +9990 range.	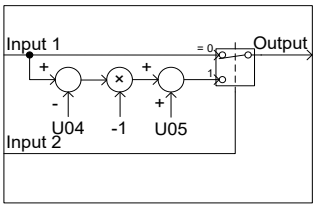	Function 1: Subtraction value (former) Function 2: Addition value (latter)
4003 Selector 1	When input 2 (digital input) is 1, the function 1 setting value is output. When input 2 is 0, input 1 (analog input) is output.	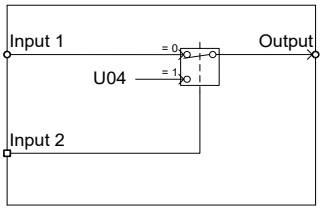	Function 1: Setting value Function 2: Not required
4004 Selector 2	When input 2 (digital input) is 0, the function 1 setting value is output. When input 2 is 1, the function 2 setting value is output.	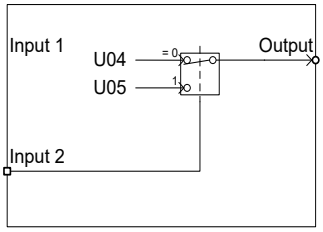	Function 1: Setting value 1 Function 2: Setting value 2
4005 LPF (Low pass filter)	When input 2 (digital input) is “1”, the value obtained by performing LPF is output to input 1 (analog input). When input 2 is “0”, input 1 is output as is. The LPF circuit maintains the previous output value. Therefore, when the digital 2 input changes from 0 to 1, the output will be the value with the previous output value added as the initial value of LPF. There is no upper/lower limiter.	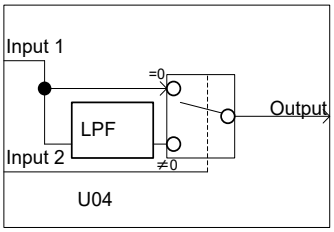	Function 1: Time constant 0: No filter 0.01 to 5.00 s Function 2: Fixed at 0

FUNCTION
F Codes
E Codes
C Codes
P Codes
H Codes
A Codes
b Codes
r Codes
J Codes
d Codes
U Codes
y Codes
K Codes

Block selection (U01 etc.)	Description	Block diagram	Function 1, Function 2 (U04, U05, etc.)
4006 Rate limiter with enable	When input 2 (digital input) is 0, input 1 (analog input) is output as is. When input 2 is 1, the input 1 change is restricted with the rate of change specified with function 1 and 2. The initial value is the input 1 value when input 2 changes from 0 to 1. When terminal [CLC] is ON, the previous output value is cleared to zero.	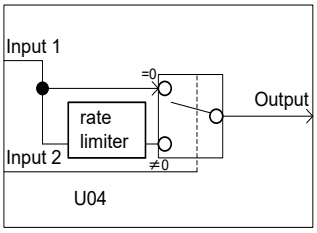	Function 1: Rise rate of change Time taken to change by 100% 0: No restriction 0.01 to 600 s Function 2: Fall rate of change Time taken to change by 100% 0: Same rate of change as function 1 0.01 to 600 s
5000 Selector 3	When the step output signal (SOXX) specified with function 1 is 0, input 1 (analog input) is output as is. When the step output signal specified with function 1 is 1, input 2 (analog input) is output as is.	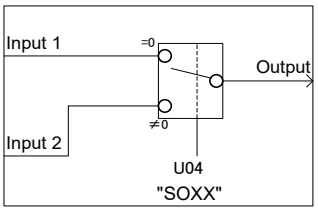	Function 1: Step number Function 2: Not required The setting after the decimal point is ignored.
5100 Selector 4	When input 2 (digital input) is 0, input 1 is output as is. When input 2 is 1, step output signal set with function 1 is output.	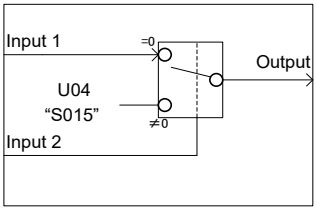	Function 1: Step number Function 2: Not required The setting after the decimal point is ignored.
6001 Reading function codes	The function code is specified with function 1 and 2, and function code data is output. The function code type is specified with function 1, and the last two digits of the function code are specified with function 2. The format in which data is read correctly is shown below. (However, values are restricted to the -9990 to 9990 range.) Furthermore, [29] expresses 20000 as 100%.) [1], [2], [3], [4], [5], [6], [7], [8], [9], [10], [12], [22], [24], [29], [35], [37], [45], [61], [67], [68], [74], [92], [93] Data formats other than the above cannot be read correctly. Do not use any other format.	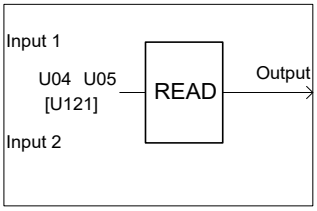	Function 1: Function code type 0 to 255 Function 2: Function code number 0 to 99 The setting after the decimal point is ignored. Refer to “Table 5.3-6” in “■ Configuration of function codes” for details on function code types. For details on data format numbers, refer to the Communication User’s Manual (24A7-E-0082).

Block selection (U01 etc.)	Description	Block diagram	Function 1, Function 2 (U04, U05, etc.)
6002 Function code writing	Reflects the input 1 value to a specific function code (U171 to U180) when input 2 is 1. When input 2 is 0, the previous value is maintained for the specific function code. Data is written to nonvolatile memory when the inverter detects undervoltage. Do not use more than one of these operation circuits for a single function code.	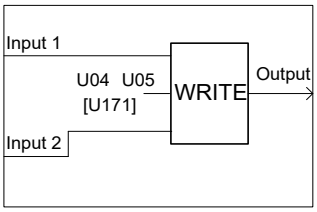	Function 1: Fixed at 39 Function 2: 71 to 75 The setting after the decimal point is ignored.
6003 Temporary change of function code	Specific function code (separate table) values in the memory are selected between the input 1 value with the input 2 value. Set the function code type for function 1. Set the last two digits of the function code number for function 2. When input 2 is 0, the current value is reflected for the function code value in the memory. When input 2 is 1, the input 1 value is reflected. If the function code designation is not a specific function code, data 0 will be reflected, and therefore caution is advised. Refer to “Table 5.3-5” in “■ Specific function codes” for details on applicable function codes. This operation circuit is used by replacing this specific function code value. Consequently, do not use by entering another LE. If changing a single function code, do not use more than one of these operation circuits. If function codes are temporarily changed using 6003 while operating a customizable logic, by performing a read operation with FRENIC-Loader4, or copying data to the keypad, the data that is being temporarily changed may be copied instead of nonvolatile memory data. If performing these operations, do so after stopping the customizable logic. 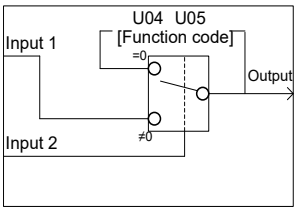	Function 1: Function code type 0 to 255 Function 2: Function code number 0 to 99 The setting after the decimal point is ignored. Refer to “Table 5.3-6” in “■ Configuration of function codes” for details on function code types. For details on data format numbers, refer to the Communication User’s Manual.
6004 Function code link	If targeting customizable logic using the password function, it will not be possible to change user parameters 1 to 50, or function codes other than those in storage area 1 to 10. Using this function, by setting function codes that can no longer be changed when the password function is applied to input 1, and linking them with user parameters 1 to 50, and storage area 1 to 10 specified with function 1 and function 2, function codes within customizable logic can be changed even when the password function is applied. 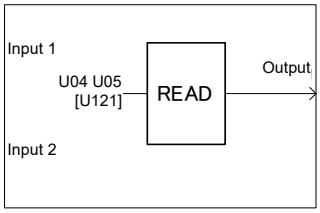	Function 1: Function code type 0 to 255 Function 2: Function code number 0 to 99 The setting after the decimal point is ignored. Refer to “Table 5.3-6” in “■ Configuration of function codes” for details on function code types. For details on data format numbers, refer to the Communication User’s Manual.

Block selection (U01 etc.)	Description	Block diagram	Function 1, Function 2 (U04, U05, etc.)
6011 BIT extraction [S]	By specifying the appropriate bit in the function code belonging to the S group, that condition is output as logic.		Function 1: Function code number 0 to 99 Function 2: Applicable bit 0 to 15 The setting after the decimal point is ignored. For details on S, M, W, X, and Z group function codes, refer to the Communication User's Manual.
6012 BIT extraction [M]	By specifying the appropriate bit in the function code belonging to the M group, that condition is output as logic.		
6013 BIT extraction [W]	By specifying the appropriate bit in the function code belonging to the W group, that condition is output as logic.		
6014 BIT extraction [X]	By specifying the appropriate bit in the function code belonging to the X group, that condition is output as logic.		
6015 BIT extraction [Z]	By specifying the appropriate bit in the function code belonging to the Z group, that condition is output as logic. 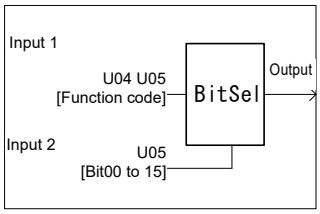 Of groups S to Z, the format in which data is read correctly is shown below. [14], [15], [16], [43], [44], [77], [78], [91]		
6101 PID dancer output gain frequency	This is used with the dancer control PID. It is possible to switch between calculating the frequency compensation with a PID output of 100% as equivalent to the maximum output frequency, and calculating the frequency compensation as equivalent to the specified frequency (line speed command). With input 1, it is possible to switch between whether or not to enable this block. The frequency compensation is selected with input 2 and the gain ratio. When input 2 is OFF, and U04 ≠ 0% Output: Frequency compensation = (PID output) x (Line speed command) When input 2 is ON, and U04 ≠ 0%: Output: Frequency compensation = (PID output x gain ratio (U04)) x (Maximum output frequency) When a gain ratio of 0% is set, the calculation formula will be as follows, regardless of input 2. Output: Frequency compensation = (PID output) x (Line speed command) 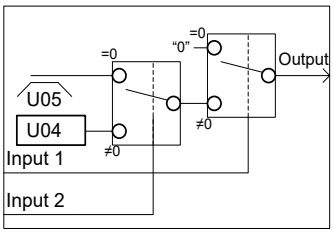 		Function 1: Gain ratio 0 to 200% Function 2: Frequency lower limit value 0 to 599 Hz

■ **Output signal**

Each customizable logic step is output to SO01 to SO260.

SO01 to SO260 differ in configuration depending upon the connection destination, as listed below. To relay those outputs to any function other than the customizable logic, route them via customizable logic outputs CL01 to CLO14.

Connection destination of each step output	Setting method	Function code
Customizable logic input	Internal step output signals “SO01” to “SO260” are selected by setting the customizable logic input.	U02, U03, etc.
Inverter sequence processing input (digital ON/OFF) (Multi-step speed “SS1” and run command “FWD” etc.)	Select one of the internal step output signals “SO01” to “SO260” to be connected to customizable logic output signals 1 to 14 (“CL01” to “CLO14”).	U71 to U80 U181 to U184
	Select an inverter’s sequence processor input function to which one of the customizable logic output signals 1 to 14 (“CL01” to “CLO14”) is to be connected. (Same as in E01)	U81 to U90 U185 to U188
Analog input (such as auxiliary frequency commands or PID process commands)	Select one of the internal step output signals “SO01” to “SO260” to be connected to customizable logic output signals 1 to 14 (“CL01” to “CLO14”).	U71 to U80 U181 to U184
	Select an analog input function to which one of the customizable logic output signals 1 to 14 (“CL01” to “CLO14”) is to be connected. (Same as in E61)	U81 to U90 U185 to U188
General-purpose digital output (terminal [Y1] to [Y4], [Y5AC], [30ABC]) Option digital output (terminal [01] to [08])	Select one of the internal step output signals “SO01” to “SO260” to be connected to customizable logic output signals 1 to 14 (“CL01” to “CLO14”).	U71 to U80 U181 to U184
	To specify a general-purpose digital output function (on [Y] terminals) to which one of the customizable logic output signals 1 to 14 (“CL01” to “CLO14”) is to be connected, select one of “CLO1” to “CLO14” by specifying the general-purpose digital output function on any Y terminal.	E20 to E24 E27
General-purpose analog output (terminal [FM1], [FM2]) General-purpose output (terminal [FMP])	Select one of the internal step output signals “SO01” to “SO260” to be connected to customizable logic output signals 1 to 14 (“CL01” to “CLO14”).	U71 to U80 U181 to U184
	To set general-purpose analog output (terminal [FM1], [FM2]) or general-purpose pulse output (terminal [FMP]) to be connected to customizable logic output signal 1 “CLO1” to 14 “CLO14”, select “CLO1” to “CLO14” at the general-purpose analog output (terminal [FM1], [FM2]) or general-purpose pulse output (terminal [FMP]) function selection side.	F31, F61 F35
User-defined alarm	Select one of the internal step output signals “SO01” to “SO260” to be connected to customizable logic output signals 1 to 14 (“CL01” to “CLO14”).	U71 to U80 U181 to U184
	Select user-defined alarms to be connected to customizable logic output signals 1 “CLO1” to 14 “CLO14”.	U81 to U90 U185 to U188

Note General-purpose digital outputs (on [Y] terminals) are updated every 5 ms. To securely output a customizable logic signal via [Y] terminals, include on- or off-delay timers in the customizable logic. Otherwise, short ON or OFF signals may not be reflected on those terminals.

Function code	Name	Data setting range	Remarks
U71	Customizable logic output signal 1 (Output selection)	0: Disable 1: Output of step 1, “SO01” 2: Output of step 2, “SO02” ... 259: Output of step 199, “SO259” 260: Output of step 200, “SO260”	
U72	Customizable logic output signal 2 (Output selection)		
U73	Customizable logic output signal 3 (Output selection)		
U74	Customizable logic output signal 4 (Output selection)		
U75	Customizable logic output signal 5 (Output selection)		
U76	Customizable logic output signal 6 (Output selection)		
U77	Customizable logic output signal 7 (Output selection)		
U78	Customizable logic output signal 8 (Output selection)		
U79	Customizable logic output signal 9 (Output selection)		
U80	Customizable logic output signal 10 (Output selection)		
U181	Customizable logic output signal 11 (Output selection)		
U182	Customizable logic output signal 12 (Output selection)		
U183	Customizable logic output signal 13 (Output selection)		
U184	Customizable logic output signal 14 (Output selection)		

Function code	Name	Data setting range	Remarks
U81	Customizable logic output signal 1 (Function selection)	■ **If a step output is digital** **The same value as E98 can be specified.** 0 (1000): Select multistep frequency (0 to 1 steps) "SS1" 1 (1001): Select multistep frequency (0 to 3 steps) "SS2" 2 (1002): Select multistep frequency (0 to 7 steps) "SS4" 3 (1003): Select multistep frequency (0 to 15 steps) "SS8" 4 (1004): Select ACC/DEC time (2 steps) "RT1" 5 (1005): Select ACC/DEC time (4 steps) "RT2" 6 (1006): Select 3-wire operation "HLD" 7 (1007): Coast to a stop command "BX" 8 (1008): Reset alarm (Abnormal) "RST" 9 (1009): Enable external alarm trip "THR" (9=Active OFF/1009=Active ON) etc.	
U82	Customizable logic output signal 2 (Function selection)		
U83	Customizable logic output signal 3 (Function selection)		
U84	Customizable logic output signal 4 (Function selection)		
U85	Customizable logic output signal 5 (Function selection)		
U86	Customizable logic output signal 6 (Function selection)		
U87	Customizable logic output signal 7 (Function selection)		
U88	Customizable logic output signal 8 (Function selection)		
U89	Customizable logic output signal 9 (Function selection)		
U90	Customizable logic output signal 10 (Function selection)	■ **If a user-defined alarm occurs with step output** 241 (1241): User-defined alarm 1 "CA1" 242 (1242): User-defined alarm 2 "CA2" 243 (1243): User-defined alarm 3 "CA3" 244 (1244): User-defined alarm 4 "CA4" 245 (1245): User-defined alarm 5 "CA5"	
U185	Customizable logic output signal 11 (Function selection)		
U186	Customizable logic output signal 12 (Function selection)		
U187	Customizable logic output signal 13 (Function selection)		

FUNCTION
F Codes
E Codes
C Codes
P Codes
H Codes
A Codes
b Codes
r Codes
J Codes
d Codes
U Codes
y Codes
K Codes

Function code	Name	Data setting range	Remarks
U188	Customizable logic output signal 14 (Function selection)	■ **If a step output is analog** 8001: Auxiliary frequency setting 1 8002: Auxiliary frequency setting 2 8003: PID command 1 8004: PID command 2 *101 8005: PID feedback value 8006: Ratio setting 8007: Analog torque limiter A 8008: Analog torque limit value B 8009: Analog torque bias 8010: Analog torque command 8011: Analog torque current command 8012: Acceleration/deceleration time ratio setting 8013: Upper limit frequency 8014: Lower limit frequency 8015: Auxiliary frequency setting 3 8016: Auxiliary frequency setting 4 8017: Analog speed limit for forward rotation 8018: Analog speed limit for reverse rotation 8019: For adjustment by manufacturer *101 8020: Analog monitor 8030: PID feedback value 2 *101 8031: Auxiliary input 1 to PID process command *101 8032: Auxiliary input 2 to PID process command *101 8033: Flowrate sensor *101 8041: External PID process command 1 *101 8042: External PID feedback value 1 *101 8043: External PID manual command 1 *101 8044: External PID process command 2 *101 8045: Extarnal PID feedback value 2 *101 8046: External PID manual command 2 *101 8047: External PID process command 3 *101 8048: External PID feedback value 3 *101 8049: External PID manual command 3 *101	

*101: Supported with ROM0500 or later.

■ Specific function codes

The following function codes can change values on memory by using the customizable logic “Function code switch (6003)”. Overwritten values are cleared with power off.

Note

- If using “Function code switching (6003)”, there is a risk of function code setting values being changed suddenly, adversely affecting motors being controlled due to a sudden change in speed and torque. To ensure that setting values do not change suddenly, use “Rate of change limiting (4006)” to suppress setting value changes, and give careful consideration to and check whether sudden changes in setting values will cause problems before use.

Table 5.3-5

No.	Name	No.	Name	No.	Name
F07	Acceleration time 1	E15	Deceleration time 4	E82	Switching Frequency of Accel/ Decel Time in Low-Speed Domain *101
F08	Deceleration time 1	E16	Torque limiter 2 (Driving)	E84	Deceleration Time in Low-Speed Domain *101
F09	Torque boost 1	E17	Torque limiter 2 (Braking)	E85	Gradual Deceleration Time Switching Frequency *101
F14	Restart mode after momentary power failure (Operation selection)	E29	Frequency arrival delay (FAR2)	E86	Gradeal Deceleration Time (Check valve protection) *101
F15	Frequency limiter (Upper limit)	E30	Frequency arrival detection width (Detection width)	C01	Jump frequency 1
F16	Frequency limiter (Lower limit)	E31	Frequency detection (Operation level)	C02	Jump frequency 2
F20	DC braking 1 (Starting frequency)	E32	Frequency detection (Hysteresis width)	C03	Jump frequency 3
F21	DC braking 1 (Braking level)	E34	Overload early warning/current detection (Operation level)	C04	Jump frequency (Width)
F22	DC braking 1 (Braking time)	E35	Overload early warning/current detection (Timer time)	C05	Multistep frequency 1
F23	Starting frequency 1	E36	Frequency detection 2	C06	Multistep frequency 2
F24	Starting frequency 1 (Holding time)	E37	Current detection 2/Low current detection (Operation level)	C07	Multistep frequency 3
F25	Stop frequency	E38	Current detection 2/Low current detection (Timer time)	C08	Multistep frequency 4
F26	Motor sound (Carrier frequency)	E39	Display coefficient for transport time	C09	Multistep frequency 5
F39	Stop frequency (Holding time)	E42	LED display filter	C10	Multistep frequency 6
F40	Torque limiter 1 (Driving)	E43	LED monitor (Display selection)	C11	Multistep frequency 7
F41	Torque limiter 1 (Braking)	E44	LED monitor (Display when stopped)	C12	Multistep frequency 8
F43	Current limiter (Operation selection)	E48	LED monitor details (Speed monitor selection)	C13	Multistep frequency 9
F44	Current limiter (Operation level)	E49	Torque Command Monitor (Polarity selection)	C14	Multistep frequency 10
F58	Terminal [FM1] (Filter)	E50	Display coefficient for speed monitor	C15	Multistep frequency 11
F59	Terminal [FM1] (Bias)	E54	Frequency detection 3 (Operation level)	C16	Multistep frequency 12
F62	Terminal [FM2] (Filter)	E55	Current detection 3 (Operation level)	C17	Multistep frequency 13
F63	Terminal [FM2] (Bias)	E56	Current detection 3 (Timer time)	C18	Multistep frequency 14
F64	Terminal [FMP] (Filter)	E65	Reference loss detection (Continuous running frequency)	C19	Multistep frequency 15
E10	Acceleration time 2	E76	DC link bus low-voltage detection level	C20	Jogging frequency
E11	Deceleration time 2	E78	Torque detection 1 (Operation level)	C33	Analog input adjustment (Terminal [12]) (Filter)
E12	Acceleration time 3	E79	Torque detection 1 (Timer time)	C38	Analog input adjustment (Terminal [C1] (C1 function)) (Filter)
E13	Deceleration time 3	E80	Torque detection 2/Low torque detection (Operation level)	C43	Analog input adjustment (Terminal [V2]) (Filter)
E14	Acceleration time 4	E81	Torque detection 2/Low torque detection (Timer time)	C76	Analog input adjustment (Terminal [C1] (V3 function)) (Filter)

FUNCTION
F Codes
E Codes
C Codes
P Codes
H Codes
A Codes
b Codes
r Codes
J Codes
d Codes
U Codes
y Codes
K Codes

No.	Name	No.	Name	No.	Name
P07	Motor 1 (%R1)	H93	Continue to run (I)	A24	Motor 2 (Slip compensation response time)
P09	Motor 1 (Slip compensation gain for driving)	H96	STOP key priority/ Start check/ RUN key save function *101	A25	Motor 2 (Slip compensation gain for braking)
P10	Motor 1 (Slip compensation response time)	H114	Anti-regenerative control (Operation level)	A43	Speed control 2 (Speed command filter)
P11	Motor 1 (Slip compensation gain for braking)	H118	Forced operation (Fire Mode) (Set frequency)	A44	Speed control 2 (Speed detection filter)
P74	Motor 1 (Synchronous motors - current command value when starting)	H121	Forced operation (Fire Mode) (Wait time)	A45	Speed control 2 (P (Gain))
P89	Motor 1 (Synchronous motor control switching level)	H130	For special adjustment (Torque limiting)	A46	Speed control 2 (I (Integral time))
H07	Curve acceleration/deceleration	H131	For special adjustment (Torque limiting)	A47	Speed control 2 (FF gain)
H08	Rotation direction restriction	H132	For special adjustment (Torque limiting)	A48	Speed control 2 (Output filter)
H09	Starting characteristic (Auto search mode)	H133	For special adjustment (Anti-regenerative control)	A49	Speed control 2 (Notch filter resonance frequency)
H11	Deceleration mode	H134	For special adjustment (Anti-regenerative control)	A50	Speed control 2 (Notch filter attenuation level)
H13	Restart mode after momentary power failure (Wait time)	H135	For special adjustment (Anti-regenerative control)	A58	Speed control 2 (Notch filter width)
H14	Restart after momentary power failure (Frequency lowering rate)	H136	For special adjustment (Current limiting)	A60	Speed display coefficient 2
H15	Restart after momentary power failure (Continue to run level)	H137	For special adjustment (Current limiting)	A61	Constant rate of feeding coefficient 2/Speed display auxiliary coefficient 2
H27	Thermistor (for motor) (Operation level)	H147	Speed control (Jogging) FF (Gain)	A62	Starting frequency 2 (Holding time)
H28	Droop control	H155	Torque bias (Level 1)	A63	Stop frequency 2
H50	Non-linear V/f 1 (Frequency)	H156	Torque bias (Level 2)	A64	Stop frequency 2 (Detection method)
H51	Non-linear V/f 1 (Voltage)	H157	Torque bias (Level 3)	A65	Stop frequency 2 (Holding time)
H52	Non-linear V/f 2 (Frequency)	H158	Torque bias (Mechanical loss compensation)	A67	Thermistor (motor 2) (Operation level)
H53	Non-linear V/f 2 (Voltage)	H159	Torque bias (Startup timer)	b05	Torque boost 3
H56	Deceleration time for forced stop	H161	Torque bias (Shutdown timer)	b09	DC braking 3 (Starting frequency)
H57	No. 1 S-curve range when accelerating (When starting)	H162	Torque bias (Limiter)	b10	DC braking 3 (Braking level)
H58	No. 2 S-curve range when accelerating (When finished)	H173	Magnetic flux level at light load	b11	DC braking 3 (Braking time)
H59	No. 1 S-curve range when decelerating (When starting)	H180	Brake signal (Check-timer for brake operation)	b12	Starting frequency 3
H60	No. 2 S-curve range when decelerating (When finished)	H195	DC braking (Braking timer at startup)	b21	Motor 3 (%R1)
H63	Low limiter (Operation selection)	H196	For adjustment by manufacturer	b23	Motor 3 (Slip compensation gain for driving)
H65	Non-linear V/f 3 (Frequency)	A05	Torque boost 2	b24	Motor 3 (Slip compensation response time)
H66	Non-linear V/f 3 (Voltage)	A09	DC braking 2 (Starting frequency)	b25	Motor 3 (Slip compensation gain for braking)
H71	Deceleration characteristic (Forced brake)	A10	DC braking 2 (Braking level)	b43	Speed control 3 (Speed command filter)
H84	Pre-excitation (Initial level)	A11	DC braking 2 (Braking time)	b44	Speed control 3 (Speed detection filter)
H85	Pre-excitation (Time)	A12	Starting frequency 2	b45	Speed control 3 (P (Gain))
H91	Current input wire break detection	A21	Motor 2 (%R1)	b46	Speed control 3 (I (Integral time))
H92	Continue to run (P)	A23	Motor 2 (Slip compensation gain for driving)	b47	Speed control 3 (FF gain)

No.	Name	No.	Name	No.	Name
b48	Speed control 3 (Output filter)	r64	Stop frequency 4 (Detection method)	J95	Brake signal (Brake-release torque)
b49	Speed control 3 (Notch filter resonance frequency)	r65	Stop frequency 4 (Holding time)	J97	Servo lock (Gain)
b50	Speed control 3 (Notch filter attenuation level)	r67	Thermistor (motor 4) (Operation level)	J98	Servo lock (Completion timer)
b58	Speed control 3 (Notch filter width)	J03	PID control P (Gain)	J99	Servo lock (Completion range)
b60	Speed display coefficient 3	J04	PID control I (Integral time)	J105	PID control (Display unit)
b61	Constant rate of feeding coefficient 3/Speed display auxiliary coefficient 3	J05	PID control D (Differential time)	J136	PID control 1 (PID multistep command 1)
b62	Starting frequency 3 (Holding time)	J06	PID control (Feedback filter)	J137	PID control 1 (PID multistep command 2)
b63	Stop frequency 3	J08	PID control (Pressurization frequency)	J138	PID control 1 (PID multistep command 3)
b64	Stop frequency 3 (Detection method)	J09	PID control (Pressurization time)	d01	Speed control 1 (Speed command filter)
b65	Stop frequency 3 (Holding time)	J10	PID control (Anti-reset windup)	d02	Speed control 1 (Speed detection filter)
b67	Thermistor (motor 3) (Operation level)	J12	PID control (Upper limit of warning (AH))	d03	Speed control 1 (P (Gain))
r05	Torque boost 4	J13	PID control (Lower limit of warning (AL))	d04	Speed control 1(I (Integral time))
r09	DC braking 4 (Starting frequency)	J15	PID control (Sleep frequency)	d05	Speed control 1 (FF gain)
r10	DC braking 4 (Braking level)	J16	PID control (Sleep timer)	d06	Speed control 1 (Output filter)
r11	DC braking 4 (Braking time)	J17	PID control (Wakeup frequency)	d07	Speed control 1 (Notch filter resonance frequency)
r12	Starting frequency 4	J18	PID control (Upper limit of PID process output)	d08	Speed control 1 (Notch filter attenuation level)
r21	Motor 4 (%R1)	J19	PID control (PID output limiter, lower limit)	d09	Speed control (JOG) (Speed command filter)
r23	Motor 4 (Slip compensation gain for driving)	J58	PID control (Detection width of dancer position error)	d10	Speed control (JOG) (Speed detection filter)
r24	Motor 4 (Slip compensation response time)	J59	PID control P (Gain) 2	d11	Speed control (JOG) P (gain)
r25	Motor 4 (Slip compensation gain for braking)	J60	PID control I (Integral time) 2	d12	Speed control (JOG) I (Integral time)
r43	Speed control 4 (Speed command filter)	J61	PID control D (Differential time) 2	d13	Speed control 2 (Jogging) (Output filter)
r44	Speed control 4 (Speed detection filter)	J62	PID control block selection	d16	PG option Ch2 (Pulse scaling factor 1)
r45	Speed control 4 (P (Gain))	J63	Overload stop (Detection value)	d17	PG option Ch2 (Pulse scaling factor 2)
r46	Speed control 4(I (Integral time))	J64	Overload stop (Detection value)	d18	PG option Ch2 (Filter time constant)
r47	Speed control 4 (FF (Gain))	J67	Overload stop (Timer timer)	d21	Speed agreement / PG error (Detection width)
r48	Speed control 4 (Output filter)	J68	Brake control signal (Brake-release current)	d22	Speed agreement / PG error (Detection timer)
r49	Speed control 4 (Notch filter resonance frequency)	J69	Brake control signal (Brake-release frequency/speed)	d24	Zero speed control
r50	Speed control 4 (Notch filter attenuation level)	J70	Brake control signal (Brake-release timer)	d25	ASR switching time
r58	Speed control 4 (Notch filter width)	J71	Brake control signal (Brake-apply frequency/speed)	d27	Servo lock (Gain switching time)
r60	Speed display coefficient 4	J72	Brake control signal (Brake-apply timer)	d28	Servo lock (Gain 2)
r61	Constant rate of feeding coefficient 4/Speed display auxiliary coefficient 4	J90	Overload stop (Torque limiting P (Gain)	d29	Speed control 1 (Notch filter width)
r62	Starting frequency 4 (Holding time)	J91	Overload stop (Torque limiting I (Integral time))	d32	Speed limit / Overspeed level (Level 1)
r63	Stop frequency 4	J92	Overload stop (Current limiting level)	d33	Speed limit / Overspeed level (Level 2)

FUNCTION
F Codes
E Codes
C Codes
P Codes
H Codes
A Codes
b Codes
r Codes
J Codes
d Codes
U Codes
y Codes
K Codes

No.	Name	No.	Name	No.	Name
d35	Over speed detection level	d151	PID control (Dancer lower limit warning position)	d184	Heavy load detection level (Hoisting)
d61	PG option Ch1/X terminal (Pulse train command filter time constant)	d152	PID control (Line speed lower limit for dancer PID output)	d185	Heavy load detection level (Lowering)
d62	PG option Ch1 / X terminal (Pulse scaling factor 1)	d153	Constant surface speed control (Line speed compensation gain)	d186	Overload judgment delay time
d63	PG option Ch1 / X terminal (Pulse scaling factor 2)	d160	Winding diameter calculation (Calculation gain)	d187	Overload detection level
d70	Speed control (Limiter)	d161	Winding diameter calculation (Compensation gain)	d189	Hoist function auxiliary settings
d71	Master follower operation (Main speed regulator gain)	d162	Winding diameter calculation (Low-speed line speed ratio)	d201	Position feed forward gain
d72	Master-follower operation (APR P gain)	d166	Winding diameter calculation (FM output gain)	d202	Position feed forward command filter
d73	Master follower operation (APR output positive side limiter)	d168	Line speed command (Acceleration time)	d203	Position regulator gain 1 (Low speed range)
d74	Master follower operation (APR output negative side limiter)	d169	Line speed command (Deceleration time)	d204	Position regulator gain 2 (High speed range)
d75	Master follower operation (Z phase alignment gain)	d171	Load conversion gain (Hoisting)	d205	Position regulator gain switching frequency
d76	Master follower operation (Offset angle between master and follower)	d172	Load conversion offset (hoisting)	d208	Orientation mode selection
d77	Master follower operation (Synchronization completion detection angle)	d173	Load conversion gain (Lowering)	d213	Homing frequency/orientation frequency
d86	Acceleration/deceleration output filter	d174	Load conversion offset (Lowering)	d214	Homing creep frequency
d90	Magnetic flux level during deceleration (Under vector control)	d175	Light load speed multiplying factor (Hoisting)	d215	Homing deceleration time/Orientation deceleration time
d91	For adjustment by manufacturer	d176	Light load speed multiplying factor (Lowering)	d216	Positioning data teaching
d120	For brake signal inversion (Brake-release current)	d177	Medium load speed multiplying factor (Hoisting)	d217	Homing shift teaching
d121	For brake signal inversion (Brake-release frequency/speed)	d178	Medium load speed multiplying factor (Lowering)	d239	In-position range
d122	For brake signal inversion (Brake-release timer)	d179	Speed multiplying factor safety factor	d276	Positioning data (Infinite direction)
d123	For brake signal inversion (Brake-release torque)	d180	Load judgment delay time (Hoisting)	d277	Positioning data communication command selection
d124	For brake signal inversion (Brake-apply frequency/speed)	d181	Load judgment delay time (Lowering)	d280	Operation during emergency stop
d125	For brake signal inversion (Brake-apply timer)	d182	Light load detection level (Hoisting)		
d150	PID control (Dancer upper limit warning position)	d183	Light load detection level (Lowering)		

J101 to J690 *101

No.	Name	No.	Name	No.	Name
J101	PID control 1 (Mode selection)	J157	Slow Flowrate Stop Function (Cancel frequency)	J194	Filter Clogging Prevention/ Anti Jam Function (Reverse rotation running time)
J102	PID control 1 (Command selection)	J158	Slow Flowrate Stop (Cancel deviation level 1)	J195	Filter Clogging Prevention/ Anti Jam Function (Number of allowable reverse runs)
J110	PID control 1 P (Gain)	J159	Slow Flowrate Stop (Cancel delay timer)	J198	Wet-bulb temperature presumption control (Frequency reduction rate)
J111	PID control 1 I (Integral time)	J160	Slow Flowrate Stop (Cancel deviation level 2)	J201	PID control 2 (Mode selection)
J112	PID control 1 D (Differential time)	J163	Flowrate sensor (Input selection)	J202	PID control 2 (Command selection)
J113	PID control 1 (Feedback filter)	J164	Flowrate Sensor (ON level)	J205	PID control 2 (Display unit)
J114	PID control 1(Anti-reset wind-up)	J165	Flowrate Sensor (OFF level)	J210	PID control 2 P (gain)
J118	PID control 1 (Upper limit of PID process output)	J166	Flowrate Sensor (Input filter)	J211	PID control 2 I (Integral time)
J119	PID control 1 (Lower limit of PID process output)	J168	Control of Maximum Starts Per Hour (Input selection)	J212	PID control 2 D (Differential time)
J122	PID control 1 (Upper level alarm (AH))	J166	Flowrate sensor (Input filter)	J213	PID control 2 (Feedback filter)
J124	PID control 1 (Lower level alarm (AL))	J168	Control of Maximum Starts Per Hour (Input selection)	J214	PID control 2 (Anti-reset wind-up)
J127	PID control 1 (Feedback failure detection (Mode selection))	J169	Control of Maximum Starts Per Hour (Number of slow flowrate stop detections)	J218	PID control 2 (Upper limit of PID process output)
J128	PID control 1 (Feedback failure continuation duration)	J176	Dry Pump Protection (Input selection)	J219	PID control 2 (Lower limit of PID process output)
J129	PID control 1 (Feedback failure upper-limit)	J177	Dry Pump Protection (Detection current)	J222	PID control 2 (Upper level alarm (AH))
J130	PID control 1 (Feedback failure lower-limit)	J178	Dry Pump Protection (Deviation)	J223	PID control 2 (Upper level alarm detection hysteresis width)
J131	PID control 1 (Feedback failure detection time)	J179	Dry Pump Protection (Flowrate sensor)	J224	PID control 2 (Lower level alarm (AL))
J143	Boost Function (Mode selection)	J180	Dry Pump Protection (Detection timer)	J225	PID control 2 (Lower level alarm detection hysteresis width)
J144	Boost Function (Operation frequency)	J182	End of Curve Protection (Input selection)	J227	PID control 2 (Feedback failure detection (Mode selection))
J145	Boost Function (Acceleration time)	J183	End of Curve Protection (Detection current)	J228	PID control 2 (Feedback failure continuation duration)
J146	Boost Function (Operation time)	J184	End of Curve Protection (Deviation)	J229	PID control 2 (Feedback failure upper-limit)
J147	Boost Function (Cancel PV level)	J185	End of Curve Protection (Flowrate sensor)	J230	PID control 2 (Feedback failure lower-limit)
J149	Slow Flowrate Stop Function (Mode selection)	J186	End of Curve Protection (Detection timer)	J231	PID control 2 (Feedback failure detection time)
J150	Slow Flowrate Stop Function (Operation level)	J188	Filter Clogging Prevention/Anti Jam Function (Input selection)	J247	Boost Function 2 (Cancel PV level)
J151	Slow Flowrate Stop Function (Elapsed time)	J189	Filter Clogging Prevention Function (Reverse operation cycle time)	J249	Slow Flowrate Stop Function 2 (Mode selection)
J152	Slow Flowrate Stop Function (Auto-operation frequency lower-limit)	J190	Filter Clogging Prevention Function (Load resistance current)	J250	Slow Flowrate Stop Function 2 (Operation level)
J153	Slow Flowrate Stop Function (Pressurization starting frequency)	J191	Filter Clogging Prevention Function (Load resistance PV signal)	J251	Slow Flowrate Stop Function 2 (Elapsed time)

FUNCTION
F Codes
E Codes
C Codes
P Codes
H Codes
A Codes
b Codes
r Codes
J Codes
d Codes
U Codes
y Codes
K Codes

No.	Name	No.	Name	No.	Name
J154	Slow Flowrate Stop Function (Pressurizing time)	J192	Filter Clogging Prevention Function (Load resistance detection timer)	J256	Slow Flowrate Stop Function 2 (Initiation inhibition time)
J156	Slow Flowrate Stop Function (Initiation inhibition time)	J193	Filter Clogging Prevention/ Anti Jam Function (Reverse rotation running frequency)	J257	Slow Flowrate Stop Function 2 (Cancel frequency)

*101: Supported with ROM0500 later.

J101 to J690 *101

No.	Name	No.	Name	No.	Name
J258	Slow Flowrate Stop Function 2 (Cancel deviation level 1)	J454	Contactor Restart Time when Switching the Motor	J515	External PID Control 1 (ON/OFF control hysteresis width)
J259	Slow Flowrate Stop Function 2 (Cancel delay timer)	J455	Motor increase switching time (deceleration time)	J516	External PID Control 1 (Proportional operation output convergent value)
J260	Slow Flowrate Stop Function 2 (Cancel deviation level 2)	J456	Motor Increase Switching Level	J517	External PID Control 1 (Proportional cycle)
J276	Dry Pump Protection 2 (Input selection)	J457	Motor Increase PID Control Start Frequency	J518	External PID Control 1 (Upper limit of PID process output)
J277	Dry Pump Protection 2 (Detection current)	J458	Motor Decrease Switching Time (Acceleration time)	J519	External PID Control 1 (Lower limit of PID process output)
J278	Dry Pump Protection 2 (Deviation)	J459	Motor Decrease Switching Level	J522	External PID Control 1 (Upper level alarm (AH))
J279	Dry Pump Protection 2 (Flowrate sensor)	J460	Motor Decrease PID Control Start Frequency	J524	External PID Control 1 (Lower level alarm (AL))
J280	Dry Pump Protection 2 (Detection timer)	J461	Motor Increase/Decrease Switching Judgment Non-responsive Area Width	J527	External PID Control 1 (Feedback error detection mode)
J401	Pump Control Mode Selection	J462	Failure Inverter Judgment Time	J529	External PID Control 1 (Feedback error upper-limit)
J411	Motor 1 Mode Selection	J465	Auxiliary Motor (Frequency operation level)	J530	External PID Control 1 (Feedback error lower-limit)
J412	Motor 2 Mode Selection	J466	Auxiliary Motor (Hysteresis width)	J531	External PID Control 1 (Feedback error detection time)
J413	Motor 3 Mode Selection	J467	Auxiliary Motor (PV operation level)	J540	External PID Control 1 (Manual command)
J414	Motor 4 Mode Selection	J468	Auxiliary Motor (Connection timer)	J550	External PID Multistep Command (Mode selection)
J415	Motor 5 Mode Selection	J469	Auxiliary Motor (Interrupting timer)	J551	External PID Multistep Command (Multistep command 1)
J416	Motor 6 Mode Selection	J501	External PID Control 1 (Mode selection)	J552	External PID Multistep Command (Multistep command 2)
J417	Motor 7 Mode Selection	J502	External PID Control 1 (Remote command selection)	J553	External PID Multistep Command (Multistep command 3)
J418	Motor 8 Mode Selection	J504	External PID Control 1 (Deviation selection)	J601	External PID Control 2 (Mode selection)
J436	Motor Regular Switching Time	J505	External PID Control 1 (Display unit)	J602	External PID Control 2 (Remote command selection)
J437	Motor Regular Switching Signal Output Time	J510	External PID Control 1 P (Gain)	J605	External PID Control 2 (Display unit)
J450	Motor Increase Judgment (Judgment frequency)	J511	External PID Control 1 I (Integral time)	J606	External PID Control 2 (Maximum scale)
J451	Motor Increase Judgment (Duration time)	J512	External PID Control 1 D (Differential time)	J607	External PID Control 2 (Minimum scale)
J452	Motor Decrease Judgment (Judgment frequency)	J513	External PID Control 1 (Feedback filter)	J610	External PID Control 2 P (Gain)
J453	Motor Decrease Judgment (Duration time)	J514	External PID Control 1 (Anti-reset wind-up)	J611	External PID Control 2 I (Integral time)

*101: Supported with ROM0500 later.

FUNCTION
F Codes
E Codes
C Codes
P Codes
H Codes
A Codes
b Codes
r Codes
J Codes
d Codes
U Codes
y Codes
K Codes

J101 to J690 *101

No.	Name	No.	Name	No.	Name
J612	External PID Control 2 D (Differential time)	J631	External PID Control 2 (Feedback error detection time)	J666	External PID Control 3 (Proportional operation output convergent value)
J613	External PID Control 2 (Feedback filter)	J640	External PID Control 2 (Manual command)	J667	External PID Control 3 (Proportion cycle)
J614	External PID Control 2 (Anti-reset wind-up)	J651	External PID Control 3 (Mode selection)	J668	External PID Control 3 (Upper limit of PID process output)
J615	External PID Control 2 (ON/OFF control hysteresis width)	J652	External PID Control 3 (Remote command selection)	J669	External PID Control 3 (Lower limit of PID process output)
J616	External PID Control 2 (Proportional operation output convergent value)	J655	External PID Control 3 (Display unit)	J672	External PID Control 3 (Upper level alarm (AH))
J617	External PID Control 2 (Proportion cycle)	J656	External PID Control 3 (Maximum scale)	J674	External PID Control 3 (Lower level alarm (AL))
J618	External PID Control 2 (Upper limit of PID process output)	J657	External PID Control 3 (Minimum scale)	J677	External PID Control 3 (Feedback error detection mode)
J619	External PID Control 2 (Lower limit of PID process output)	J660	External PID Control 3 P (Gain)	J679	External PID Control 3 (Feedback error upper-limit)
J622	External PID Control 2 (Upper level alarm (AH))	J661	External PID Control 3 I (Integral time)	J680	External PID Control 3 (Feedback error lower-limit)
J624	External PID Control 2 (Lower level alarm (AL))	J662	External PID Control 3 D (Differential time)	J681	External PID Control 3 (Feedback error detection time)
J627	External PID Control 2 (Feedback error detection mode)	J663	External PID Control 3 (Feedback filter)	J690	External PID Control 3 (Manual command)
J629	External PID Control 2 (Feedback error upper-limit)	J664	External PID Control 3 (Anti-reset wind-up)		
J630	External PID Control 2 (Feedback error lower-limit)	J665	External PID Control 3 (ON/OFF control hysteresis width)		

*101: Supported with ROM0500 later.

■ **Function codes for the customizable logic**

Function code number	Name	Range	Minimum unit	Remarks
U121 to U170	User parameters 1 to 50	-9990.00 to 9990.00 Effective number are 3 digits.	0.01 to 10	
U171 to U180	Storage area 1 to 10	-9990.00 to 9990.00 Effective number are 3 digits.	0.01 to 10	Memorizes the data when powered off.

■ Configuration of function codes

If specifying function codes, set the code values (decimal values on left, hexadecimal values on right) in the following table for function 1 (U04, etc.), and set the last two digits of the function code number for function 2 (U05, etc.) Function codes that are not found in the following table cannot be specified. The data format that can be accessed correctly is as follows. (However, values are restricted to the -9990 to 9990 range) [1], [2], [3], [4], [5], [6], [7], [8], [9], [10], [12], [22], [24], [29], [35], [37], [45], [61], [67], [68], [74], [92], [93]
A data format other than the above cannot be accessed correctly, and should therefore not be used.

Table 5.3-6

Group	Code		Group	Code	
F	0	00_H	b	18	12_H
E	1	01_H	d	19	13_H
C	2	02_H	W1	22	16_H
P	3	03_H	X1	25	19_H
H	4	04_H	K	28	$1C_H$
A	5	05_H	H1	31	$1F_H$
o	6	06_H	o1	37	25_H
M	8	08_H	U1	39	27_H
r	10	$0A_H$	J1	48	30_H
U	11	$0B_H$	J2	49	31_H
J	13	$0D_H$	J4	51	33_H
y	14	$0E_H$	J5	52	34_H
W	15	$0F_H$	J6	53	35_H
X	16	10_H	d1	54	36_H
Z	17	11_H	d2	55	37_H

■ Task process cycle setting (U100)

U100 data	Content
0	Automatically adjusts the task cycle from 1 ms to 20 ms depending on the number of used steps. It is recommended to use this value.
1	1 ms: Up to 10 steps. If it exceeds 10 steps, the customizable logic does not work.
2	2 ms: Up to 20 steps. If it exceeds 20 steps, the customizable logic does not work.
5	5 ms: Up to 50 steps. If it exceeds 50 steps, the customizable logic does not work.
10	10 ms: Up to 100 steps. If it exceeds 100 steps, the customizable logic does not work.
20	20 ms: 20 is set if 100 steps is exceeded.
127: Multi-task	Customizable logics are operated in parallel in 1 ms, 2 ms, 5 ms, 10 ms, and 20 ms cycles depending on the step number range. Even if there are many steps overall, it is possible to run specific customizable logics in short cycles. The relationship between cycle and step number is as follows. 1 ms cycle task: Step 1 to 10 2 ms cycle task: Step 11 to 20 5 ms cycle task: Step 21 to 50 10 ms cycle task: Step 51 to 100 20 ms cycle task: Step 101 to 200 Step 201 to 260 cannot be used.

Note that if it exceeds the steps defined in 1, 2, 5 or 10, the customizable logic does not work.

FUNCTION
F Codes
E Codes
C Codes
P Codes
H Codes
A Codes
b Codes
r Codes
J Codes
d Codes
U Codes
y Codes
K Codes

■ Operating precautions

The customizable logics are executed within 1 ms to 20 ms (according to U100) and processed in the following procedure:

(1) First, latch the external input signals for all the customizable logics from step 1 to 260 to maintain synchronism.

(2) Perform logical operations sequentially from step 1 to 260.

(3) If an output of a step is an input to the next step, outputs of step with high priority can be used in the same process.

(4) The customizable logic simultaneously updates 14 output signals.

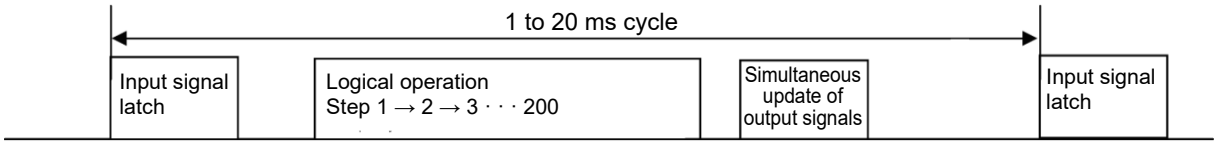

The step execution order for multi-tasks is shown in the following diagram.

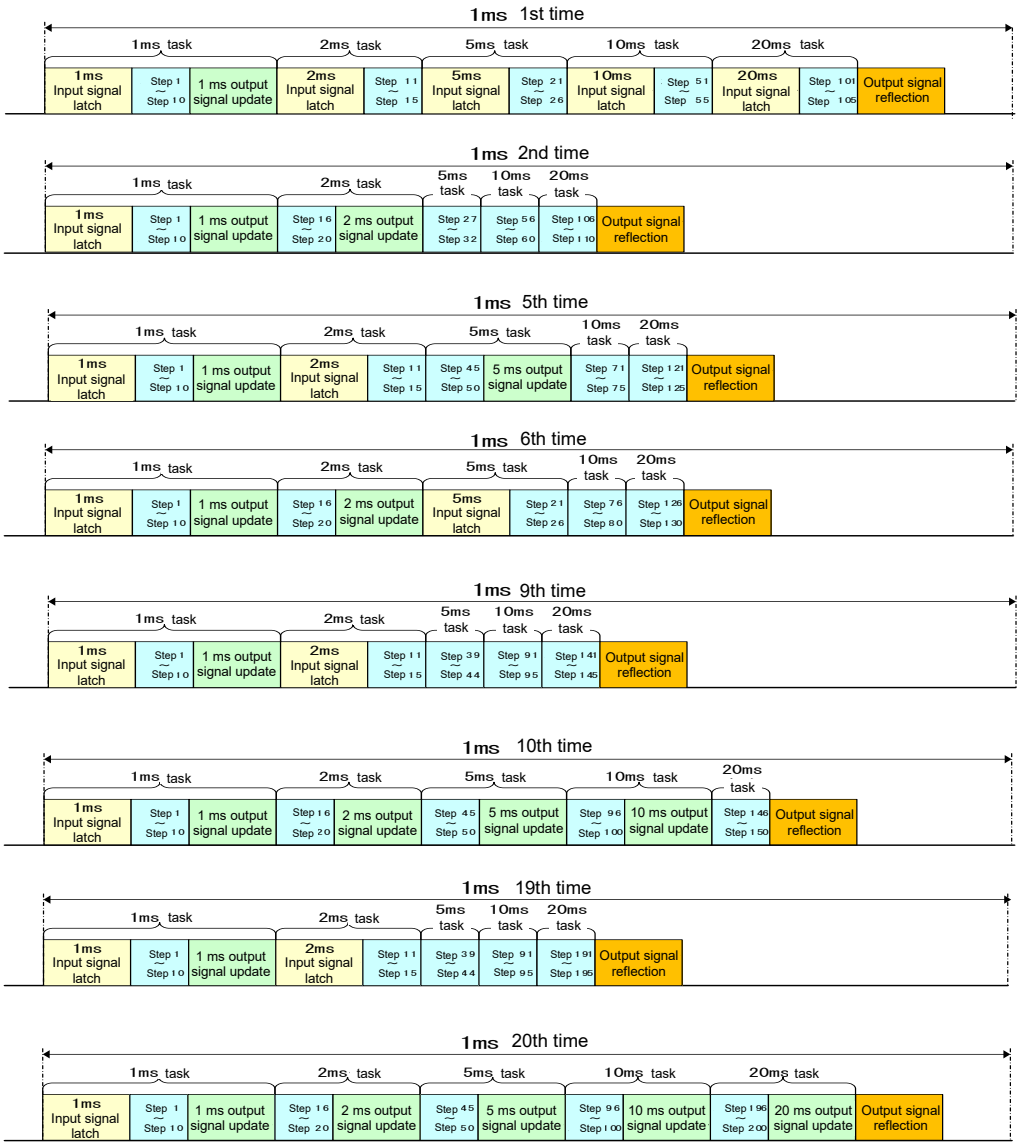

Note that if you do not consider the process order of customizable logic when configuring a function block, the expected output may not be obtained, the operation can be slower or a hazard signal can occur, because the output signal of a step is not available until the next cycle.

⚠CAUTION

Changing a functional code related to the customizable logic (U code etc.) or turning ON the customizable logic cancel signal “CLC” causes change in operation sequence depending on the setting, which may suddenly start an operation or start an unexpected action. Fully ensure it is safe before performing the operation.

Failure to observe this could result in an accident or injury.

■ Customizable logic timer monitor (Step selection) (U91, X89 to X93)

The monitor function codes can be used to monitor the I/O status or timer’s operation state in the customized logics.

Selection of monitor timer

Function code	Function	Remarks
U91	0: Monitor not active (the monitor data is 0) 1 to 260: set the step No. to monitor	The setting value is cleared to 0 when powered OFF.

Monitor method

Monitor method	Function code	Content
Communication	X89 customizable logic (digital I/O)	Digital I/O data for the step defined in U91 (only for monitoring)
	X90 customizable logic (timer monitor)	Data of the timer/counter value for the step defined in U91 (only for monitoring)
	X91 customizable logic (analog input 1)	Analog input 1 data for the step defined in U91 (only for monitoring)
	X92 customizable logic (analog input 2)	Analog input 2 data for the step defined in U91 (only for monitoring)
	X93 customizable logic (analog output)	Analog output data for the step defined in U91 (only for monitoring)

FUNCTION
F Codes
E Codes
C Codes
P Codes
H Codes
A Codes
b Codes
r Codes
J Codes
d Codes
U Codes
y Codes
K Codes

■ **Customizable logic output monitor (Step selection) (U98)**

■ **Customizable logic output monitor (Display unit selection) (U99)**

The output status of the desired customizable logic steps can be monitored at the keypad.
This is enabled by setting “32: Customizable logic output” with keypad monitor selection E43.
Furthermore, when using the multi-function keypad (TP-A2SW), the desired display units can be selected.

Function code	Function				Remarks
U98	0: Monitor not active (the monitor data is 0) 1 to 260: set the step No. to monitor				Setting values are retained even when the power is turned OFF.
U99	1: No unit 2: % 4: r/min 7: kW 8: HP 10: mm/s 11: mm/m 12: mm/h 13: m/s 14: m/min 15: m/h 16: FPS 17: FPM 18: FPH 19: SPM *100 20: m3/s 21: m3/min	22: m3/h 23: L/s 24: L/min 25: L/h 26: GPS 27: GPM 28: GPH 29: CFS 30: CFM 31: CFH 32: kg/s 33: kg/m 34: kg/h 35: lb/s 36: lb/m 37: lb/h 38: AF/Y	40: Pa 41: kPa 42: MPa 43: mbar 44: bar 45: mmHg 46: PSI 47: mWG 48: inWG 49: inHg 50: WC 51: FT WG 52: ATM *100 60: K 61: °C 62: °F 65: Nm	66: lb ft 70: mm 71: cm 72: m 73: km 74: in 75: Ft 76: Yd 77: mi 80: ppm 90: m3 91: L 92: GAL 93: OZ *100	These are valid only when using the multi-function keypad (TP-A2SW).

*100: Supported with ROM0300 or later.

■ **Cancel customizable logic “CLC” (Function codes E01 to E09, data = 80)**

Customizable logic operations can temporarily be disabled so that the inverter can be operated without the customizable logic’s logical circuit and timer operation, for example during maintenance.

"CLC"	Function
OFF	Customizable logic enabled (according to U00 setting)
ON	Customizable logic disabled

Note If you turn ON the customizable logic cancellation signal “CLC”, a sequence by the customizable logic is cleared, which can suddenly start operation depending on the settings. Ensure the safety and check the operation before switching the signal.

■ **Clear all customizable logic timers “CLTC” (Function codes E01 to E09, data = 81)**

If the "CLTC" terminal function is assigned to a general-purpose input terminal and this input is turn ON, all the general-purpose timers and counters in the customizable logic are reset. It is used to reset and restart the system, when, for example, the timing of external sequence cannot be consistent with internal customizable logic due to a momentary power failure.

"CLTC"	Function
OFF	Normal operation
ON	Resets all the general-purpose timers and counters in the customizable logic. (To reactivate it, turn it OFF again.)

U101 to U106	**Customizable logic (Operating point 1 (X1, Y1), Operating point 2 (X2, Y2), Operating point 3 (X3, Y3))**
U107	**Customizable logic (Automatic conversion factor calculation)**

Operation coefficient KA, KB, and KC used with Block 3001: Conversion 1 calculation formula (KA x input 1^2 + KB x input 1 + KC) is calculated automatically. By converting the applicable functions to graphical format, setting the 3 XY points in U101 to U106, and changing U107 from 0 to 1, the exponent part and Mantissa for KA, KB, and KC for U92 to U97 are calculated automatically, and data is updated.

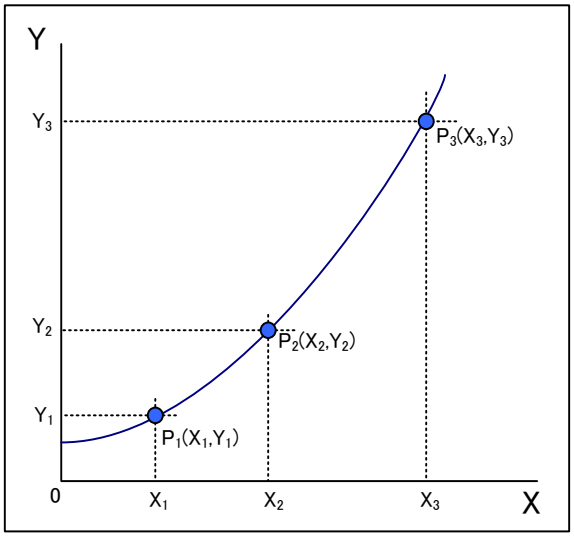

Convert the applicable functions to graphical format, and set the 3 XY points as follows.

Function code	Name	Setting range
U101	Operating point data P1 (X1)	-999.00 to 9990.00
U102	Operating point data P1 (Y1)	-999.00 to 9990.00
U103	Operating point data P2 (X2)	-999.00 to 9990.00
U104	Operating point data P2 (Y2)	-999.00 to 9990.00
U105	Operating point data P3 (X3)	-999.00 to 9990.00
U106	Operating point data P3 (Y3)	-999.00 to 9990.00

U107 data	Function
0	Disable
1	U92 to U97 automatic calculation (Returns to 0 after automatic calculation)

The following operation coefficients are automatically calculated, and then stored in each function code.

Function code	Name	Setting range
U92	Coefficient KA mantissa portion	-9.999 to 9.999
U93	Coefficient KA exponent portion	-5 to 5
U94	Coefficient KB mantissa portion	-9.999 to 9.999
U95	Coefficient KB exponent portion	-5 to 5
U96	Coefficient KC mantissa portion	-9.999 to 9.999
U97	Coefficient KC exponent portion	-5 to 5

■ **Setting examples of customizable logic**

Setting example 1: Use one switch to change multiple signals

If you use one switch to change the frequency setting 2/frequency setting 1 and torque limit 2/torque limit 1 simultaneously, replace an external circuit that is conventionally needed with a customizable logic reducing the digital input terminals used to a single terminal.

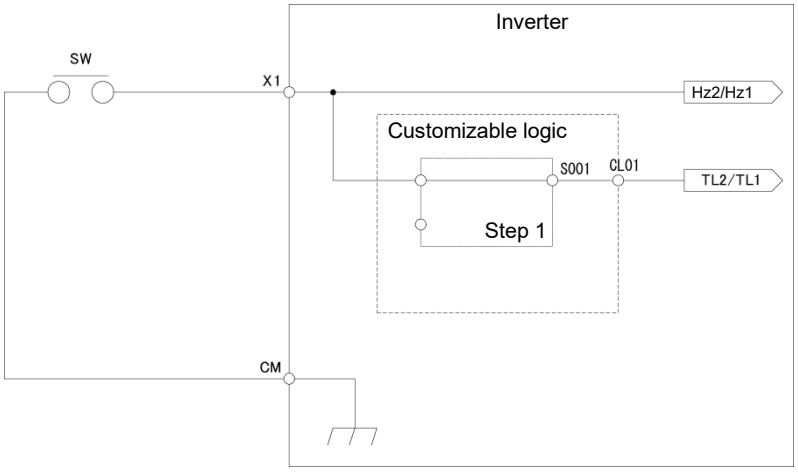

To configure this customizable logic, set the function codes as follows. (Timer selection) and (Timer setting) do not need to be modified if no change is made.

Function code			Setting value	Setting	Remarks
E01	Terminal [X1] (Function selection)		11	Select frequency command 2/1 “Hz2/Hz1”	Can be used in parallel as general-purpose input terminals
U00	Customizable Logic (Mode selection)		1	Enable	
U01	Customizable logic: Step 1	(Block selection)	10	Through output + General-purpose timer	Mode selection
U02		(input 1)	4001	Terminal [X1] input signal “X1”	
U71	Customizable logic: Output signal 1	(Output selection)	1	Output of step 1, “SO01”	
U81		(Function selection)	14	Select torque limiter level 2/1 “TL2/TL1”	

Setting example 2: Consolidating multiple output signals into one

If also outputting an auto-restarting after momentary power failure “IPF” signal to a performing scheduled operation “RUN” signal, replace an external circuit that is conventionally needed with a customizable logic sequence to reduce the digital output terminals and external relays.

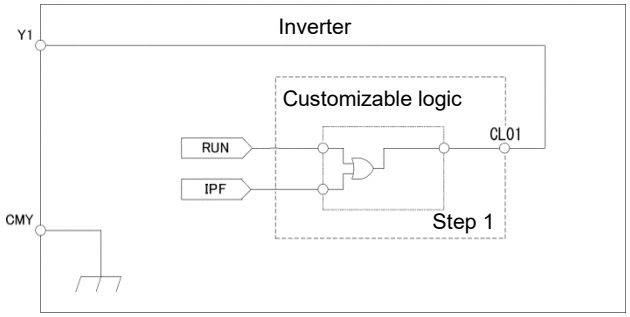

To configure this customizable logic, set the function codes as follows. (Timer selection) and (Timer setting) do not need to be modified if no change is made.

Function code			Setting value	Setting	Remarks
E20	Terminal [Y1] (Function selection)		111	Customizable logic output signal 1 “CL01”	
U00	Customizable Logic (Mode selection)		1	Enable	
U01	Customizable logic: Step 1	(Block selection)	30	Logical OR + general-purpose timer	Mode selection
U02		(input 1)	0	During operation “RUN”	
U03		(input 2)	6	Auto-restarting after momentary power failure “IPF”	
U71	Customizable logic output signal 1	(Output selection)	1	Output of step 1, “SO01”	
U81		(Function selection)	100	No function assigned “NONE”	

FUNCTION
F Codes
E Codes
C Codes
P Codes
H Codes
A Codes
b Codes
r Codes
J Codes
d Codes
U Codes
y Codes
K Codes

Setting example 3: One-shot operation

If starting operation by shorting the SW-FWD switch or SW-REV switch, or stopping operation by shorting the SW-STOP switch (same as multi-function keypad FWD/REV key/STOP key), the previously required external circuit can be replaced with customizable logic.

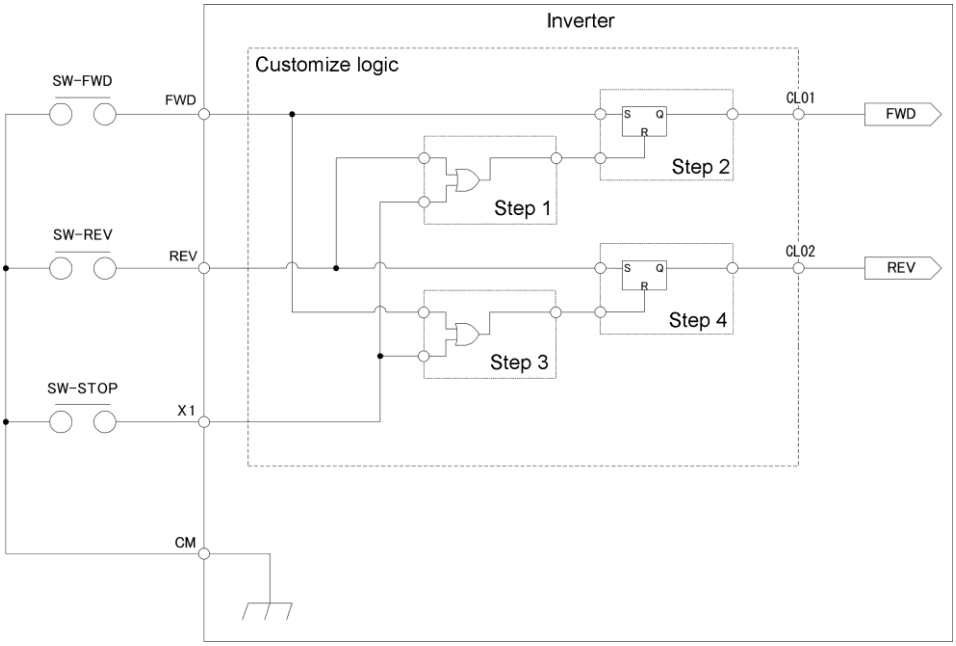

To configure this customizable logic, set the function codes as follows. (Timer selection) and (Timer setting) do not need to be modified if no change is made.

Function code			Setting value	Setting	Remarks
F02	Operation method		1	External signal	
E01	Terminal [X1] (Function selection)		100	No function assigned “NONE”	
E98	Terminal [FWD] (Function selection)		100	No function assigned “NONE”	
E99	Terminal [REV] (Function selection)		100	No function assigned “NONE”	
U00	Customizable Logic (Mode selection)		1	Enable	
U01	Customizable logic: Step 1	(Block selection)	30	Logical OR + general-purpose timer	Mode selection
U02		(input 1)	4011	Terminal [REV] input signal “REV”	
U03		(input 2)	4001	Terminal [X1] input signal “X1”	
U06	Customizable logic: Step 2	(Block selection)	60	Reset priority flip-flop + general-purpose timer	Mode selection
U07		(input 1)	4010	Terminal [FWD] input signal “FWD”	
U08		(input 2)	2001	Output of step 1 “SO01”	
U11	Customizable logic: Step 3	(Block selection)	30	Logical OR + general-purpose timer	Mode selection
U12		(input 1)	4010	Terminal [FWD] input signal “FWD”	
U13		(input 2)	4001	Terminal [X1] input signal “X1”	
U16	Customizable logic: Step 4	(Block selection)	60	Reset priority flip-flop + general-purpose timer	Mode selection
U17		(input 1)	4011	Terminal [REV] input signal “REV”	
U18		(input 2)	2003	Output of step 3 “SO03”	

Function code			Setting value	Setting	Remarks
U71	Customizable logic output signal 1	(Output selection)	2	Output of step 2, “SO02”	“FWD” command
U72	Customizable logic output signal 2		4	Output of step 4, “SO04”	“REV” command
U81	Customizable logic output signal 1	(Function selection)	98	Run forward/stop command “FWD”	
U82	Customizable logic output signal 2		99	Run reverse/stop command “REV”	

FUNCTION
F Codes
E Codes
C Codes
P Codes
H Codes
A Codes
b Codes
r Codes
J Codes
d Codes
U Codes
y Codes
K Codes

5.3.20 y codes (Link functions)

y01 to y20	RS-485 setting 1, RS-485 setting 2

In the RS-485 communication, two systems can be connected.

System (Communication port)	Connection configuration	Function code	Equipment that can be connected
System 1 (Port 1)	RJ-45 connector for keypad connection	y01 to y10	(1) Keypad (standard/multi-function) (2) FRENIC-Loader4 (3) Host equipment
System 2 (Port 2)	[Terminal] DX+, DX-, SD	y11 to y20	(2) FRENIC-Loader4 (3) Host equipment

An overview of all compatible devices is given below.

(1) Keypad (standard/multi-function)
The standard keypad or multi-function keypad can be connected to operate and monitor the inverter.
The keypad can be used regardless of the y code setting.

(2) FRENIC-Loader4
Inverter supporting (monitor, function code editing, test operation) can be performed by connecting a computer with the FRENIC-Loader4 installed.

Note The FRENIC-MEGA keypad is equipped with a USB port. If connecting with FRENIC-Loader4 via the USB port, use is possible simply by setting the station address (y01) to “1”.

(3) Host equipment
Host equipments such as PLC and controller can be connected to control and monitor the inverter. Modbus RTU* protocol or Fuji general-purpose inverter protocol can be selected for communication.

* Modbus RTU is a protocol stipulated by Modicon.

Refer to the "RS-485 Communication User's Manual" for details.

■ Station addresses (y01, y11)

Sets the station address for RS-485 communication. The setting range differs for each protocol.

Protocol	Range	Broadcast
Modbus RTU	1 to 247	0
Fuji general-purpose inverter	1 to 31	99
BACnet MS/TP *101	0～255	255
Metasys N2 *101	0～255	None (-)

- When specifying a value outside the range, no response is returned.
- If using FRENIC-Loader4, set the station specified with FRENIC-Loader4.

*101: Supported with ROM0500 or later.

- Use is only possible with either BACnet MS/TP or Metasys N2.
  Refer to protocol selection (y10, y20) for details.
- “0” is treated as “1” with other than BACnet MS/TP.

■ Communications error processing (y02, y12)

Selects the operation when an error occurs during RS-485 communication.

RS-485 errors are logical errors such as address errors, parity errors and framing errors, as well as transmission errors and disconnection errors set at y08/y18. These errors occur only when the inverter is configured to receive the operation command or frequency command via the RS-485 communication. If the operation command or frequency command is not issued via the RS-485 communication, or when the inverter is stopped, the system does not determine an error.

y02, y12 data	Function
0	Displays the RS-485 communication error (Err8 for y02, ErrP for y12), and immediately stops the operation (trip by alarm). Displays an RS-485 communication error (Err8), and immediately stops operation (alarm stop).
1	Operates for a period specified in the error process timer (y03, y13), and then displays the RS-485 communication error (Err8 for y02, ErrP for y12), and stops the operation (trip by alarm).
2	Retries the communication for a period specified in the error process timer (y03, y13), and if the communication is recovered, the operation continues. Displays the RS-485 communication error (Err8 for y02, ErrP for y12) if the communication is not recovered, and immediately stops the operation (trip by alarm).
3	Continues the operation if a communication error occurs.

Refer to the "RS-485 Communication User's Manual" for details.

■ Error process timer (y03, y13)

Sets the error process timer. An error is judged when the timer value set for which a response is required has elapsed due to such reasons as no response from the other end. Refer to the "Communication time-out detection timer (y08, y18)" item also.

- Data setting range: 0.0 to 60.0 (s)

■ Baud rate (y04, y14)

Sets the baud rate.

The baud rate is fixed at 9600 bps for Metasys N2 (*101).

y04, y14 data	Function
0	2400 bps
1	4800 bps
2	9600 bps
3	19200 bps
4	38400 bps
5	57600 bps
6	76800 bps
7	115200 bps

*101: Supported with ROM0500 or later.

■ Data length selection (y05, y15)

Sets the character length.

- For Modbus RTU:
  The value does not need to be set since it automatically becomes 8 bits.

y05, y15 data	Function
0	8 bits
1	7 bits

■ Parity selection (y06, y16)

Sets the parity bit.

y06, y16 data	Function
0	No parity bit (2 bits of stop bit for Modbus RTU)
1	Even parity (1 bit of stop bit for Modbus RTU)
2	Odd parity (1 bit of stop bit for Modbus RTU)
3	No parity bit (1 bit of stop bit for Modbus RTU)

■ Stop bit selection (y07, y17)

Sets the stop bit.

- For Modbus RTU:
  The value does not need to be set since it is automatically determined in conjunction with the parity bit.

y07, y17 data	Function
0	2 bits
1	1 bit

■ Communication time-out detection timer (y08, y18)

Sets the period from the time the system detects a communication time-out (for any reason such as disconnection in equipment that periodically accesses the station within a specific time) during operation using RS-485 communication, until the time the system processes communication errors.

Refer to y02, y12 for details on communication error processing.

y08, y18 data	Function
0	Disconnection is not detected.
1 to 60	Detection time from 1 to 60 (s)

■ Response interval time (y09, y19)

Sets the period from the time the system receives a request from host equipment (computer or PLC, etc.) until the time that a response is returned after receipt of the request is complete. Even with host devices for which processing from the completion of transmission to the completion of receipt preparation is delayed, the timing can be aligned by setting the response interval time.

- Data setting range: 0.00 to 1.00 (s)

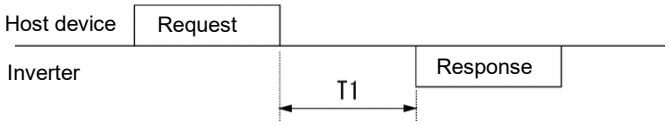

T1 = Response interval time + α

α: Processing time inside the inverter. This differs based on the timing and command.

Refer to the "RS-485 Communication User's Manual" for details.

Note If specifying inverter settings from FRENIC-Loader4 via RS-485 communication, set based on the performance and conditions for the computer or converter (USB-RS-485 converter, etc.)
(Some converters monitor communication status and switch transmission and reception with timer.)

■ **Protocol selection (y10, y20)**

Selects the communication protocol.

y10, y20 data	Function
0	Modbus RTU protocol
2	Fuji general-purpose inverter protocol
3	Metasys N2 protocol *101
5	BACnet MS/TP protocol *101
50	Communication link pump control protocol (y20 only) *101

*101: Supported with ROM0500 or later.

Note Data 3: Metasys N2 protocol and data 5: Use if only possible with either BACnetMS or TP protocol. If either of the above is assigned to both port 1 and port 2, the port 1 communication protocol at the inverter will be “0: Modbus RTU protocol”.

y60, y61	BACnet MS/TP device instance (high order, low order) *101

*101: Supported with ROM0500 or later.

These function codes set the device instance used for identification at the BACnet MS/TP protocol application layer.

The setting method differs as follows depending on the y16 setting value.

y61data	Device instance	Settable range *1
0	(y60 data x 1000) + MAC address *2	(y60 data x 1000) + (0 to 127)
128～999	(y60 data x 1000) + y61 data	(y60 data x 1000) + (128 to 999)

*1 The maximum device instance setting range is 0 to 4194302.
*2 Set the MAC address to y01 or y11.

y62, y63	BACnet MS/TP Network Number (ch1, ch2) *101

*101: Supported with ROM0500 or later.

These function codes set the BACnet MS/TP network numbers for RS-485 communication Ch1/Ch2.

The setting range for each network number is 0 to 65534.

y85, y86	For adjustment by manufacturer

These function codes are for adjustment by the manufacturer. Unless otherwise specified, do not access these function codes.

FUNCTION
F Codes
E Codes
C Codes
P Codes
H Codes
A Codes
b Codes
r Codes
J Codes
d Codes
U Codes
y Codes
K Codes

y93	RTU current format switching

It is possible to switch the format of the current data which can be be monitored by Modbus RTU protocol with RS-485 communication.

If switching from the G1 or GX series, and inheriting the customer's controller program (using without changes), set "1: Data format 19".

y93 data	Function
0	Format 24
1	Format 19 (G1 compatible)

Refer to the "RS-485 Communication User's Manual" for details on applicable function codes.

Data format [24] floating point data

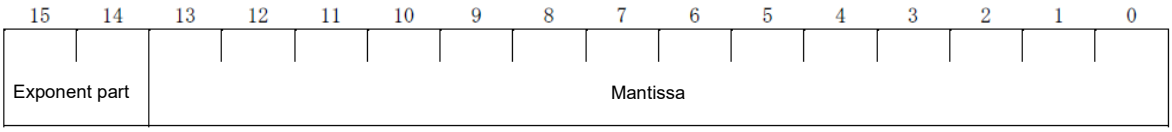

Exponent part : 0～3 Mantissa : 1～9999

Numerical value expressed with this format = Mantissa x (Exponent part-2) to the power 10

Numerical value (current value)	Mantissa	Exponent part	(Exponent part-2) to the power 10
0.00 to 99.99	0 to 9999	0	0.01
100.0 to 999.9	1000 to 9999	1	0.1
1000 to 9999	1000 to 9999	2	1
10000 to 99990	1000 to 9999	3	10

Data format [19] current value

The current value is decimal point data (positive). The increment is 0.01 for FRN0003 to 0115G2S-2G / FRN0002 to 0060G2□-4G, and 0.1 for FRN0146 to 0432G2S-2G / FRN0085 to 1480G2□-4G.

With FRN0003 to 0115G2S-2G / FRN0002 to 0060G2□-4G, it is not possible to write data that exceeds 655 A. When reading after a data write instruction that exceeds 655 A, positive values are not read.

Furthermore, current value data from the 5th digit onward is rounded down inside the inverter.

(Example: After submitting a write instruction of 107.54 A to the FRN0115G2S-2G, 107.5 A is written.)

(Example) If F11 (electronic thermal overload relay operation level) = 107.0 A

107.0 x 10 = 1070 = 042EH, and therefore → 04H 2EH

(Example) If F11 (electronic thermal overload relay operation level) = 3.60 A

3.60 x 100 = 360 = 0168H, and therefore → 01H 68H

y94	Bus function (Operation command source selection) Related function codes: y98: Bus function (Operation selection) H30: Link function (Operation selection)

When running and operating the inverter via field bus communication, this function is used if issuing run commands only with inverter unit digital input terminals [FWD] and [REV]. When doing so, set the following values for y98, H30, and F02.

If operating the inverter via field bus communication, X command operation will still be performed via field bus communication, but this function should be used if wishing to provide run commands (FWD/REV) only by a method other than communication (external contact signal input). When doing so, set the following values for y98, H30, and F02.

Refer to the H30 section for details on operation if y94 is set to 1, and y98, H30, and F02 are set to other than the following, and if y94 is set to 0.

y94	y98	H30	F02	Frequency commands PID commands, etc.	Run command	Other than run commands (input terminal [X1 to X9])
1	1	0	1	Commands via field bus communication	Inverter unit Terminal [FWD], [REV]	Commands via field bus communication

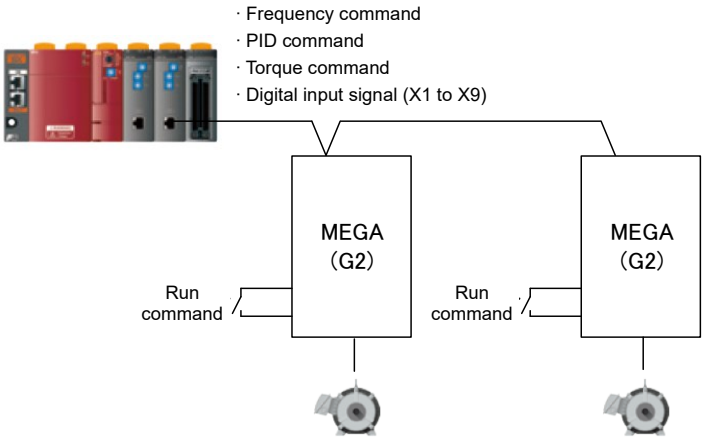

y95	Data clear processing for communications error

If any of the communication error alarms (Er8 ErP Er4 Er5) occurs in RS-485, CANopen communication or bus option, the data of communication command function codes (S codes) can automatically be cleared.

Since the frequency and operation commands are also disabled when the data is cleared, the inverter does not start unintentionally when an alarm is released.

y95 data	Function
0	Do not clear the data of function codes Sxx when a communications error occurs. (compatible with the conventional inverters)
1	Clear the data of function codes S01/S05/S19 when a communications error occurs.
2	Clear the run command assigned bit of function code S06 when a communications error occurs.
3	Clear operations of 1 and 2 above are performed.
4	Clear operations for 1, 2 above and S02, S03, S13, S15, S20, S21 *100

*100: Supported with ROM0300 or later.

FUNCTION
F Codes
E Codes
C Codes
P Codes
H Codes
A Codes
b Codes
r Codes
J Codes
d Codes
U Codes
y Codes
K Codes

y96	G1, GX1 compatibility mode

When reading or writing inverter function code setting data via RS-485 communication or field bus communication, it is possible to select a compatibility mode that permits communication with the same function code and data format as the FRENIC-MEGA (G1,GX1), FRENIC-Eco (F1) series. By using this function, it is possible to keep customer controller program changes to a minimum when replacing inverters.

y96 data	Function
0	Disable
1	Reserved (Do not set.)
2	Operation (G1 compatibility)
3	Operation (GX1 compatibility)
4	Operation (F1 compatibility) *100

*100: Supported with ROM0300 or later.

Only when y96 = 2 or 3, and the communication command source is RS-485 communication or field bus communication, the following function codes are replaced with the equivalent of those for the G1 and GX1 series. Function codes that are not listed below are interchangeable, and therefore G1 and GX1 series settings can be replaced as is.

G1S/GX1 function codes → G2S replace destination function codes

Consecutive No.	G1S/GX1 function code				Replace	Replace destination G2S function code		Replace valid conditions	Supplementary information
	Code	Name	R/W	Communication data format (*1)	○:YES —:NO	Code	Communication data format (*1)	Function code conditions	
1	E40	PID display coefficient A	R/W	[12]	○	J106	[12]	y96=2 or 3	—
2	E41	PID display coefficient A	R/W	[12]	○	J107	[12]	y96=2 or 3	—
3	E90	Motor selection	R/W	[1]	—	—	—	y96=2 or 3	Exists for GX1 only Not used with G2
4	C23	Stage 2 operating time	R/W	[12]	○	C23	[84]	y96=2 or 3	—
5	C23	Stage 2 operating time	R/W	[12]	○	C23	[84]	y96=2	—
6	C24	Stage 3 operating time	R/W	[12]	○	C24	[84]	y96=2	—
7	C25	Stage 4 operating time	R/W	[12]	○	C25	[84]	y96=2	—
8	C26	Stage 5 operating time	R/W	[12]	○	C26	[84]	y96=2	—
9	C27	Stage 6 operating time	R/W	[12]	○	C27	[84]	y96=2	—
10	C28	Stage 7 operating time	R/W	[12]	○	C28	[84]	y96=2	—
11	C82	Stage 1 rotation direction, acceleration/deceleration time	R/W	[1]	○	C22	[84]	y96=2	—
12	C83	Stage 2 rotation direction, acceleration/deceleration time	R/W	[1]	○	C23	[84]	y96=2	—
13	C84	Stage 3 rotation direction, acceleration/deceleration time	R/W	[1]	○	C24	[84]	y96=2	—
14	C85	Stage 4 rotation direction, acceleration/deceleration time	R/W	[1]	○	C25	[84]	y96=2	—
15	C86	Stage 5 rotation direction, acceleration/deceleration time	R/W	[1]	○	C26	[84]	y96=2	—
16	C87	Stage 6 rotation direction, acceleration/deceleration time	R/W	[1]	○	C27	[84]	y96=2	—
17	C88	Stage 7 rotation direction, acceleration/deceleration time	R/W	[1]	○	C28	[84]	y96=2	—
18	H86	For adjustment by manufacturer	R/W	[1]	—	—	—	y96=2	—
19	H87	For adjustment by manufacturer	R/W	[3]	—	—	—	y96=2	Exists for G1 only
20	H88	__EN display function selection	R/W	[1]	—	—	—	y96=2	Exists for G1 only Not used with G2
21	J56	PID speed command filter	R/W	[5]	—	—	—	y96=2	Not used with G2
22	J68	Brake control signal (Brake-release current)	R/W	[1]	○	J68	[5]	y96=2 or 3	—
23	J70	(Brake-release timer)	R/W	[3]	○	J70	[5]	y96=2 or 3	—
24	J72	(Brake-apply timer)	R/W	[3]	○	J72	[5]	y96=2 or 3	—
25	J95	(Brake-release torque)	R/W	[1]	○	J95	[5]	y96=2 or 3	—
26	J97	(Gain)	R/W	[5]	○	J97	[7]	y96=2 or 3	—

F1S function codes → G2S replace destination function codes *100

Consecutive No.	F1S function code				Replace	Replace destination G2S function code		Replace valid conditions		Restrictions	Supplementary information
	Code	Name	R/W	Communication data format (*1)	○: Yes —: No	Code	Communication data format (*1)	Function code conditions	Communication source requirements (*2)		
1	E40	PID Display Coefficient A	R/W	[12]	○	J106	[12]	y96=4	RS485 or OPC		—
2	E41	PID Display Coefficient B	R/W	[12]	○	J107	[12]	y96=4	RS485 or OPC		—
3	H09	Starting Mode (Auto search)	R/W	[1]	○	H09	[1]	y96=4	RS485 or OPC	All 2 for write values other than 0	—
4	H17	Starting Mode (Auto search frequency)	R/W	[5]	—	—		y96=4	RS485 or OPC	Saved to dummy variable	—
5	H27	Thermistor level	R/W	[5]	—	H09	[5]	y96=4	RS485 or OPC	Other than copy target	—
6	H98	Protection/Maintenance Function (Mode selection)	R/W	[1]	—	H98	[1]	y96=4	RS485 or OPC	bit 6 to bit 7 are not rewritten	—
6	J15	PID control (Sleep frequency)	R/W	[1]	○	J15	[3]	y96=4	RS485 or OPC		—
7	J17	(Wakeup frequency)	R/W	[1]	○	J17	[3]	y96=4	RS485 or OPC		—
8	J18	PID control (Upper limit of PID process output)	R/W	[1]	○	J18	[2]	y96=4	RS485 or OPC	Hz → % variable	—
9	J19	(Lower limit of PID process output)	R/W	[1]	○	J19	[2]	y96=4	RS485 or OPC	Hz → % variable	—
10	M47	Life of PC board electrolytic capacitor	R	[1]	—	M47	[74]	y96=4	RS485 or OPC	1h unit	—
11	M48	Life of cooling fan	R	[1]	—	M48	[74]	y96=4	RS485 or OPC	1h unit	—

*100: Supported with ROM0300 or later.

y97 Communication data storage selection

The inverter memory (non-volatile memory) has a limited rewritable times (100 thousand to 1 million times). If the count immoderately increases, the data cannot be modified or saved, causing a memory error.

If frequently rewriting data via communication, data can be stored to the temporary memory instead of writing it to the nonvolatile memory. By doing so, the number of times that data is written to the nonvolatile memory is suppressed, preventing memory errors.

If y97 is set to “2”, the data written in the temporary memory is stored (All Saved) in the non-volatile memory.

To change the y97 data, it is necessary to press the STOP + ▲/▼ keys (simultaneous keying).

y97 data	Function
0	Store into nonvolatile memory (Rewritable times are limited)
1	Write into temporary memory (Rewritable times are unlimited)
2	Save all data from temporary memory to nonvolatile memory (After all save, y97 data returns to 1)

y98 Bus function (Mode selection) (Refer to H30)

For details on setting the y98 bus function (mode selection), refer to the description of H30.

FUNCTION
F Codes
E Codes
C Codes
P Codes
H Codes
A Codes
b Codes
r Codes
J Codes
d Codes
U Codes
y Codes
K Codes

y99	Loader link function (Mode selection)

Function code to switch the links to the inverter supporting loader software (FRENIC-Loader4). Rewriting y99 with the inverter supporting loader software (FRENIC-Loader4) enables the set frequency and run command from the inverter supporting loader software (FRENIC-Loader4). You do not need to use the keypad since the data is rewritten from the inverter supporting loader.

If the operation command is configured to be given from the inverter supporting loader software, and if the computer starts to go out of control during the operation and a stop command from the loader software is ignored, remove the communication cable connected to the computer that runs the inverter supporting loader software, and connect the keypad to set the y99 data to 0. By setting the y99 data to 0, the operation is isolated from the inverter supporting loader software's commands, switching to the commands of inverter's own settings (such as function code H30).

The y99 data is not saved in the inverter; the setting is lost and returned to 0 when powered off.

y99 data	Function	
	Set frequency	Run command
0	From function codes H30 and y98	From function codes H30 and y98
1	Setting from FRENIC-Loader4	From function codes H30 and y98
2	From function codes H30 and y98	Command issued from FRENIC-Loader4
3	Setting from FRENIC-Loader4	Command issued from FRENIC-Loader4

5.3.21 o/o1/o2 codes (Option functions)

These codes are set when the inverter is equipped with an option card.
Set the codes after referring to the description in Chapter 11 “11.19 Built-in Option Card Types and Ports in Which They Can be Installed”, and the respective instruction manual for each option card.

5.3.22 T codes Timer Functions (Scheduled operations)

These codes (T codes) can be used with ROM0500 or later. Set using the multi-function keypad (TP-A2SW ROM 5020 or later).

Refer to the Multi-function Keypad (TP-A2SW) Instruction Manual (INR-SI47-2422) for details on the setting method.
T codes can be set in Programming mode "PRG > 2 (Function Code) > 5 (Timer Setup) 1 to 6 (sub-menu number)".

Note

Inverter settings can be transferred at the dedicated scheduled operation setting screen in the FRENIC-Loader4 inverter support software. Refer to the FRENIC-Loader4 Instruction Manual (INR-SI47-2104) for details.

[Setting example]

Schedule 1: 04:00 to 11:30 (Mon, Wed, Fri, Sun)

Schedule 2: 12:00 to 17:00 (Mon, Wed, Sat, Sun)

Schedule 3: 18:00 to 23:00 (Mon, Tue, Thur, Fri, Sat)

Schedule 4: 21:00 to 09:00 (Mon, Wed, Fri, Sun)

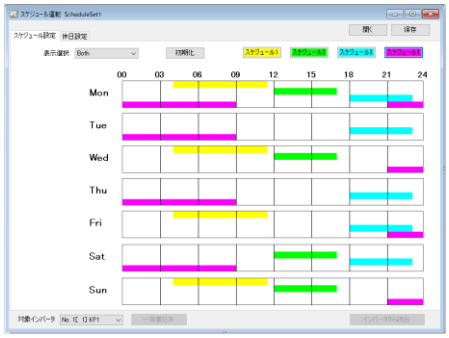

T01, T06, T11, T16	Schedule 1, 2, 3, 4 Operation (Operating mode)

When the real-time clock is enabled, the inverter can be run and stopped, and external signals can be output based on a previously set schedule using date and time information. The following functions are also available.

- Up to 4 day and time combinations can be set.
- Up to 20 holidays a year can be set.
- Inverter operation and external output can be selected for each schedule setting.
- Scheduled operation can be enabled, disabled, or canceled with external input.

- Data setting range: 0 to 3

T01 data	Function
0	Disable
1	Enable (inverter output) The inverter starts running when the operation target time is reached. (Run commands and frequency commands must be entered separately.)
2	Enable (external output) The applicable digital output terminals "TMD", "TMD1", "TMD2", "TMD3", and "TMD4" turn ON when the operation target time is reached. (There is no need to enter inverter run commands and frequency commands.)
3	Enable (inverter output + external output) The inverter runs and the applicable digital output terminals "TMD", "TMD1", "TMD2", "TMD3", and "TMD4" turn ON when the operation target time is reached. (Run commands and frequency commands must be entered separately.)

Digital output signals "TMD", "TMD1", "TMD2", "TMD3", and "TMD4" can be used as external output signals. If using digital output signals, it is necessary to set them at E20 to E24, and E27.

- Performing scheduled operation signal: "TMD" (E20 to E24, E27: Data = 190)
- Performing scheduled operation 1 signal: "TMD1" (E20 to E24, E27: Data = 191)
- Performing scheduled operation 2 signal: "TMD2" (E20 to E24, E27: Data = 192)
- Performing scheduled operation 3 signal: "TMD3" (E20 to E24, E27: Data = 193)
- Performing scheduled operation 4 signal: "TMD4" (E20 to E24, E27: Data = 194)

In addition to selecting operations with function codes, operations can be enabled and disabled by using "TMD", "TMD1", "TMD2", "TMD3", and "TMD4" for digital input terminals.
(function codes E01 to E09, data 190 to 194)

T02, T07, T12, T17 **T03, T08, T13, T18** **T04, T09, T14, T19**	**Schedule 1, 2, 3 Operation (Start time)** **(End time)** **(Start day of the week)**

Sets the start time, finish time, and start day for scheduled operation. Sets schedule 1 with T02, T03, and T04, schedule 2 with T07, T08, and T09, schedule 3 with T12, T13, and T14, and schedule 4 with T17, T18, and T19.

■ **Timer (Start time, End time) (T02, T03, T07, T08, T12, T13, T17, T18)**

Sets the scheduled operation start time and finish time. (Can only be set at dedicated menu.)

The start and finish time size correlation and scheduled operation are as follows.

Size correlation	Scheduled operation details
Start time < finish time (example: Start time: 8:00, finish time: 18:00)	The inverter runs from the start time on the enabled day to the finish time on that day.
Start time ≥ finish time (example: Start time: 16:00, finish time: 03:00)	The inverter runs from the start time on the enabled day to the finish time on the following day. (The inverter runs even if the following day is not the enabled day.)

■ **Timer (Start day of the week) (T04, T09, T14, T19)**

Sets the scheduled operation start day. Multiple days can be set.
(Can only be set at dedicated menu.)

6bit	5bit	4bit	3bit	2bit	1bit	0bit
Sunday	Saturday	Friday	Thursday	Wednesday	Tuesday	Monday

T06	**Schedule 2 Operation (Operating mode) (Refer to T01)**

A detailed explanation can be found in the function code T01 section.

T07 **T08** **T09**	**Schedule 2 Operation (Start time) (Refer to T02)** **(End time) (Refer to T03)** **(Start day of the week) (Refer to T04)**

A detailed explanation can be found in the function code T02 to T04 sections.

T11	**Schedule 3 Operation (Operating mode) (Refer to T01)**

A detailed explanation can be found in the function code T01 section.

T12 **T13** **T14**	**Schedule 3 Operation (Start time) (Refer to T02)** **(End time) (Refer to T03)** **(Start day of the week) (Refer to T04)**

A detailed explanation can be found in the function code T02 to T04 sections.

T16	Schedule 4 Operation (Operating mode) (Refer to T01)

A detailed explanation can be found in the function code T01 section.

T17 T18 T19	Schedule 4 Operation (Start time) (Refer to T02) (End time) (Refer to T03) (Start day of the week) (Refer to T04)

A detailed explanation can be found in the function code T02 to T04 sections.

T51 to T70	Schedule Operation (Pause date 1) to (Pause date 20)

Even if scheduled operation is enabled, if, for example, wishing to avoid operation on days such as holidays, up to 20 holidays a year can be set. Furthermore, each holiday can be enabled or disabled. Scheduled operation is not performed on relevant holidays, even if within the schedule set time.

The following two methods can be used to set holidays.

1. Setting based on month and day (example: January 1)
2. Setting based on day (example: 2nd Sunday in January)

Function code	Setting item		Setting details
T51 to T70	Applicable date (month, day of month setting)		0 to 65535
	bit15	Mode selection	0: Disables holidays 1: Enables holidays
	bit14	-	-
	bit13	Setting method	0: Day setting. 1: Date setting
	bit12	Month	• January to December
	bit11		
	bit10		
	bit9		
	bit8	Day of month or week *1	• 1st to 31st (bit 13: date setting) • Week 1 to week 4, final (bit 13: day setting)
	bit7		
	bit6		
	bit5		
	bit4		
	bit3	Day	• Monday to Sunday (bit 13: day setting)
	bit2		
	bit1		
	bit0		

*1: The meaning differs depending on the bit 13 setting.

FUNCTION
F Codes
E Codes
C Codes
P Codes
H Codes
A Codes
b Codes
r Codes
J Codes
d Codes
U Codes
y Codes
K Codes

5.3.23 K codes (Keypad functions)

The multi-function keypad indicated in the description refers to the TP-A2SW.

📖 Refer to the TP-A2SW multi-function keypad Instruction Manual (Detailed version) (INR-SI47-2422□-E) for details on the multi-function keypad installation method, separately sold battery/SD card insertion and removal method, screen display and operation methods, and setting method for setting items other than K codes.

K01	LCD monitor (Language selection)

Select the language displayed on the multi-function keypad LCD monitor.

・Data setting range: 0 to 19

K01 data	Language	K01 data	Language	K01 data	Language
0	Japanese	7	Korean *104	14	Portuguese
1	English	8	Russian	15	Dutch
2	German	9	Greek	16	Malay
3	French	10	Turkish	17	Vietnamese
4	Spanish	11	Polish	18	Thai
5	Italian	12	Czech	19	Indonesian
6	Chinese	13	Swedish		

*104: Supported with multi-function keypad (TP-A2SW) ROM 5020 or later.
The display is in English on keypads prior to support.

K02	Backlight OFF time

Sets the LCD backlight OFF time for the multi-function keypad. Turns the backlight OFF if the time set for K02 has elapsed since stopping multi-function keypad operation.

・Data setting range: 1 to 30 (min), OFF

K02 data	Function
OFF	Always OFF
1 to 30 (min)	Automatically turns OFF after the set time has elapsed if no multi-function keypad operation is performed.

K03 K04	LCD monitor (Backlight brightness adjustment) (Contrast adjustment)

The multi-function keypad LCD brightness and contrast can be adjusted.

・Data setting range: 0 to 10

■ **Backlight brightness adjustment (K03)**

K03 data	0, 1, 2, · · · · · · · · · · · · · · · · · · · 8, 9, 10
0	Dark ◄——► Bright

■ **Contrast adjustment (K04)**

K04 data	0, 1, 2, · · · · · · · · · · · · · · · · · · · 8, 9, 10
0	Low ◄——► High

K08	Status display

The status message displayed on the multi-function keypad LCD can be hidden or displayed.

・Data setting range: 0, 1

K08 data	Function
0	Hide
1	Display

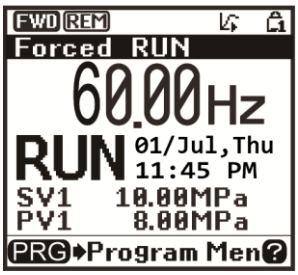

Status message
Displays operating statuses that the operator needs to be notified of.

Display example
Undervoltage
Performing forced stoppage
Restarting after momentary power failure
Awaiting retry
Performing forced operation
Performing commercial operation, etc.

K15	Screen selection

The multi-function keypad LCD sub-monitor display type can be selected.

・Data setting range: 0, 1

K15 data	Function
0	Numerical display
1	Bar graph display

<Sub-monitor: Numerical display>

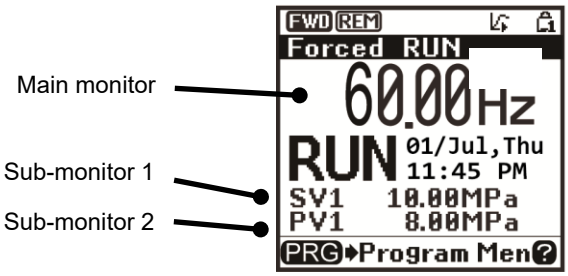

<Sub-monitor: Bar graph display>

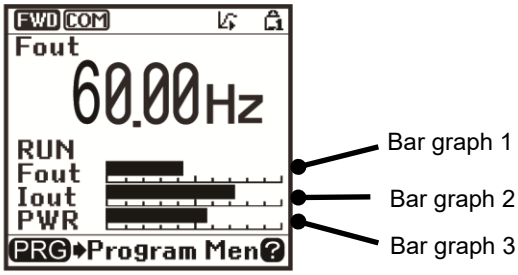

FUNCTION
F Codes
E Codes
C Codes
P Codes
H Codes
A Codes
b Codes
r Codes
J Codes
d Codes
U Codes
y Codes
K Codes

K16	**Sub-monitor 1 display content**
K17	**Sub-monitor 2 display content**
K20	**Bar graph 1 display content**
K21	**Bar graph 2 display content**
K22	**Bar graph 3 display content**

The displayed content can be selected from the following function codes based on the display type selected with K15. Refer to the description for function code E43, and "3.3.1 Operating Status Main Monitor and Sub-monitor" in Chapter 3 of the multi-function keypad Instruction Manual (Detailed version) (INR-SI47-2422□-E) for details of the display content, and set in the following function codes.

Display location	Displayed content
Main monitor	E43 data
Sub-monitor 1	K16 data
Sub-monitor 2	K17 data
Bar graph 1	K20 data
Bar graph 2	K21 data
Bar graph 3	K22 data

K25	**Display Unit for Load speed**	***101**

Selects the unit when the load rotation speed is displayed (E48 = 4)

K31	**Display Unit for Input Watt-hour Data**	***101**

Sets the display unit for the integral power consumption (K16 = 35) and integral power data calculated at the inverter.

This is valid only when using the multi-function keypad.

・Data setting range: 0, 1

K31 data	Unit
0	kWh
1	MWh

K33	**Long-term Input Watt-hour Data Monitor**	***101**

The integration period for integral power data calculated at the inverter can be set. The integration period can be selected from time, day, week, and month units, and 48 of these can be saved. For example, long-term integral power can be checked for up to 48 months (4 years) if using month units.

Long-term integral power data can be checked at the multi-function keypad.

・Data setting range: 0 (OFF), 1 to 4

K33 data	Integral period
0 (OFF)	Cancel and reset
1	Time unit
2	Day unit
3	Week unit
4	Month unit

*101: Supported with ROM0500 or later.

K40	For adjustment by manufacturer

Do not change.

K51	Traceback data overwrite selection

It is possible to set whether to allow or prohibit overwriting if the maximum number of data items that can be saved is reached.

0: Allow (factory default), 1: Prohibit

Maximum number of data items that can be saved

When multi-function keypad TP-A2SW connected : max. 100 items (when microSD card inserted) (Note)

When standard keypad TP-E2 connected : up to 1 item

Note: Data cannot be saved when a microSD card has not been inserted.

K52	Traceback sampling cycle

Sets the analog input/output signal or digital input/output signal waveform sampling cycle when an event occurs. There are 500 samples (fixed).

The following table shows the relationship between sampling cycle and the length of time that sampling is possible.

Sampling cycle	500[μs] (Setting value: 8)	・・・・	200[ms] (Setting value: 7)
Sampling possible time	250[ms]	・・・・	100[s]

FUNCTION
F Codes
E Codes
C Codes
P Codes
H Codes
A Codes
b Codes
r Codes
J Codes
d Codes
U Codes
y Codes
K Codes

K53	**Traceback CH4 operation selection**
K54 to K65	**Traceback analog Ch1 to 4 source selection**
K58 to K65	**Traceback digital Ch1 to 8 source selection**

By selecting the analog input/output signal or digital input/output signal to be saved when an event occurs using the FRENIC-Loader4 inverter support software and setting it in the inverter, setting information is saved to this function code.

Events are set to when “alarms” occur by factory default.

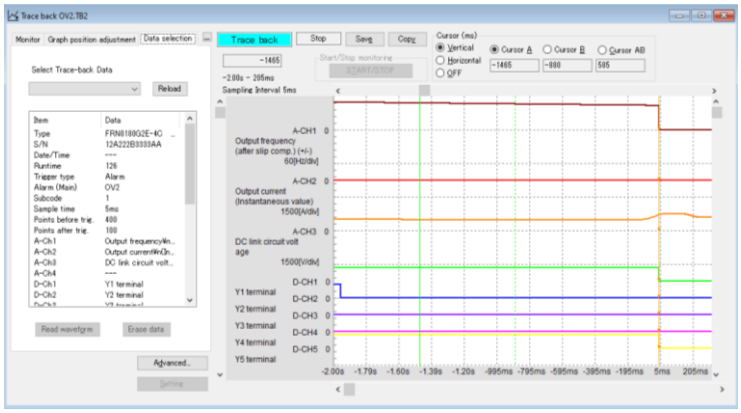

Traceback data display example

Refer to the Instruction Manual (INR-SI47-2104□) for the FRENIC-Loader4 inverter support software for details on traceback.

K90	Application Select

If using ROM0500 and later, and multi-function keypad (TP-A2SW) (ROM 5020 or later), a display filter can be applied in function code group units by application. The standard keypad (TP-E2) displays all function codes, regardless of the setting value.

Function code group	Group name	0: All Function	1: General	2: HVAC	3: Pump
		All function codes	General applications	HVAC applications	Pump applications
F	Fundamental functions	Display	Display	Display	Display
E	Terminal functions	Display	Display	Display	Display
C	Control functions	Display	Display	Display	Display
P	Motor 1 parameters	Display	Display	Display	Display
H, H1	High level functions	Display	Display	Display	Display
A	Motor 2 parameters	Display	Display	**Hide**	**Hide**
b	Motor 3 parameters	Display	Display	**Hide**	**Hide**
r	Motor 4 parameters	Display	Display	**Hide**	**Hide**
J	Application functions	Display	Display	Display	Display
J1	PID control 1	Display	Display	Display	Display
J2	PID control 2	Display	**Hide**	Display	Display
J4	Pump control	Display	**Hide**	**Hide**	Display
J5	External PID control 1	Display	Display	Display	Display
J6	External PID control 2/3	Display	Display	Display	Display
d	Application functions 2	Display	Display	Display	Display
d1	Application functions 3	Display	Display	**Hide**	**Hide**
d2	Position control	Display	Display	**Hide**	**Hide**
U, U1	Customizable logic	Display	Display	Display	Display
y	Link functions	Display	Display	Display	Display
o, o1, o2	Option functions	Display	Display	Display	Display
T	Schedule operations	Display	**Hide**	Display	Display
K	Keypad functions	Display	Display	Display	Display

FUNCTION
F Codes
E Codes
C Codes
P Codes
H Codes
A Codes
b Codes
r Codes
J Codes
d Codes
U Codes
y Codes
K Codes

K91 K92	Multi-function keypad ◄ shortcut Multi-function keypad ► shortcut

By pressing the multi-function keypad TP-A2SW (option) ◄ or ► keys while in operation mode, it is possible to jump to the program mode (PRG) MENU screen set beforehand.

・Data setting range: 0 (disable), 11 to 99

The left data setting digit indicates the menu number, and the right digit indicates the sub-menu number.
Example: If K91 = 21, by pressing the ◄ key, the display jumps to the PRG>2>1 function code data setting screen.

K91, K92 data	Setting screen display	Jump destination	
		Menu	Sub-menu
0	OFF	Disable	–
11	Language	Start-up	Language
12	AppInit		Application Selection
13	Date/Time		Clock Settings (Date/Time)
14	Display		Display Settings
15	Bluetooth		Bluetooth
21	DataSet	Function Code	Data Setting
22	DataCheck		Data Checking
23	ChgData		Change Data Checking
24	DataCopy		Data Copy
25	Schedule		Disable (Scheduled Operation)
26	Initial		Data Initialization
31	EnergyMon	Inverter Information	Disable (Energy Monitor)
32	OprMon		Operation Monitor
33	I/O Check		I/O Check
34	Mainte		Maintenance Information
35	UnitInfo		Unit Information
36	Dest.		Destination
41	AlarmHist	Alarm Information	Alarm History
42	Warn.Hist		Warning History
43	RetryHist		Retry History
51	Q.Setup	User Configurations	Select Favorites
52	Password		Password
61	PID Mon	Tools	PID Monitor
62	M-Op Mon		Disable (Multi-operation Monitor)
63	Resonant		Avoid Resonance
64	LoadFctr		Load Factor Measurement
65	COM Debug		Communication Debug
70	KP Update	KP Update	-

K96	TP-G1 compatibility mode

K96 is used if copying function codes by connecting a FRENIC-MEGA (G1/GX1) series (hereafter abbreviated to G1/GX1) or FRENIC-Eco (F1) series (hereafter abbreviated to F1) keypad (TP-E1, TP-E1U, TP-G1, TP-G1-J1/C1) to the FRENIC-MEGA (G2) series.

The following table shows the behavior when using the data copy function with a replacement keypad.

Behavior when using data copy function with replacement keypad

Replacement keypad	Function code saved to keypad	K96	Behavior when copying data
TP-E1 TP-E1U TP-E2 *100	For F1 *100	No setting necessary	“2” is set for function code K96, and “1” is set for function code F80 when copying data.
	For G1		“0” is set for function code K96 when copying data.
	For G1X		“1” is set for function code K96 when copying data.
TP-G1 TP-G1-J1/C1	For F1 *100	2	Before copying data, set “2” for function code K96 with the TP-E2, and replace the keypad with the one indicated on the left to copy data. “1” is set for function code F80 when copying data. (Note1)
	For G1	0	Before copying data, set "0" for function code K96 with TP-E2, replace the keypad with the one indicated on the left, and copy data.
	For G1X	1	Before copying data, set "1" for function code K96 with TP-E2, replace the keypad with the one indicated on the left, and copy data.

*100: Supported from ROM 0300 or later.
Note1: When data for F1 is copied by setting other than “2” for K96, F80 is not set.

Note

- Multi-function Keypad TP-A2SW can only be used on the G2.
  It cannot be used on the G1/GX1 and F1.
- K96 appears if connected to G2 keypad TP-E2, but it does not appear if connected to TP-E1, TP-E1U, TP-G1, or TP-G1-J1/C1.
- If copying data from TP-G1 or TP-G1-J1/C1, it will not be possible if the K96 setting differs from the model information saved to the keypad.
- K96 is not initialized with H03.
- By copying the F1 function code, “1: HND specification” is written to HHD/HND switching: F80, and “2” is written to K96.
- Certain function codes are replaced with other function codes, the value of certain function codes is converted, and certain function codes are not copied.

FUNCTION
F Codes
E Codes
C Codes
P Codes
H Codes
A Codes
b Codes
r Codes
J Codes
d Codes
U Codes
y Codes
K Codes

Chapter 6
TROUBLESHOOOTING

This chapter describes troubleshooting procedures to be followed when the inverter malfunctions or detects an alarm or a warning condition.

Contents

6.1 Protective Functions ····· 6-1
6.2 Before Proceeding with Troubleshooting ····· 6-3
6.3 If an Alarm Code Appears on the LED Monitor ····· 6-4
6.3.1 Alarm code list ····· 6-4
6.3.2 Causes, checks and measures of alarms ····· 6-8
[1] CA1 to CA5 User-defined alarm ····· 6-8
[2] CoF Current input terminals [C1], [C2] disconnect detection ····· 6-8
[3] dbA Braking transistor failure ····· 6-8
[4] dbH Braking resistor overheat ····· 6-9
[5] ECF STO input (EN1,EN2) circuit failure ····· 6-9
[6] ECL Customizable logic error ····· 6-10
[7] EF Ground fault protection (FRN0032G2S-2G/FRN0018G2□-4G or above) ····· 6-10
[8] Er1 Memory error ····· 6-10
[9] Er2 Keypad communications error ····· 6-11
[10] Er3 CPU error ····· 6-11
[11] Er4 Option communications error ····· 6-11
[12] Er5 Option error ····· 6-11
[13] Er6 Operation protection ····· 6-12
[14] Er7 Tuning error ····· 6-13
[15] Er8 RS-485 communications error (Communication port 1)/
Erp RS-485 communications error (Communication port 2) ····· 6-14
[16] Erd Out-of-step detection ····· 6-15
[17] ErC Magnetic pole position detection error ····· 6-16
[18] ErE Speed mismatch / Excessive speed deviation ····· 6-17
[19] ErF Data saving error during undervoltage ····· 6-18
[20] ErH Hardware error ····· 6-18
[21] Ero Positioning control error ····· 6-18
[22] Err Mock alarm ····· 6-19
[23] FUS Fuse blown ····· 6-19
[24] FAL DC fan locked ····· 6-19
[25] Lin Input phase loss ····· 6-19

[26] LoP Password protection ····· 6-20
[27] LU Undervoltage ····· 6-20
[28] nrb NTC thermistor wire disconnection ····· 6-20
[29] OCn Instantaneous overcurrent ····· 6-21
[30] OH1 Heat sink overheat ····· 6-22
[31] OH2 External alarm ····· 6-22
[32] OH3 Inverter internal overheat ····· 6-22
[33] OH4 Motor protection (PTC/NTC thermistor) ····· 6-23
[34] OH6 Charging resistor overheat ····· 6-23
[35] OLn Overload of motors 1 through 4 ····· 6-24
[36] OLU Inverter overload ····· 6-25
[37] OPL Output phase loss ····· 6-26
[38] OS Overspeed ····· 6-26
[39] OUn Overvoltage ····· 6-27
[40] PbF Charge circuit fault (FRN0008G2S-2G/FRN0004G2□-4G or above) ····· 6-27
[41] PG PG wire disconnection ····· 6-28
[42] dO Excessive positioning deviation ····· 6-28
[43] Fod forced operation (Fire Mode) ····· 6-28
[44] FoL Filter clogging error ····· 6-29
[45] PUn PID control feedback error ····· 6-29
[46] PUn External PID feedback error ····· 6-30
[47] Pdr Drought protection ····· 6-31
[48] PoL End of curve protection (PID control 1) ····· 6-32
[49] rLo Anti jam (PID control 1) ····· 6-32
[50] roC Control of maximum starts per hour (PID control 1) ····· 6-32
6.4 If a Warning Code is Displayed ····· 6-33
6.4.1 Warning code list ····· 6-33
6.4.2 Warning cause and check ····· 6-34
[1] CnF Machine life (Number of startups) ····· 6-34
[2] iGb IGBT lifetime alarm ····· 6-34
[3] LiF Lifetime alarm ····· 6-34
[4] OH Heat sink overheat early warning ····· 6-34
[5] OL Motor overload early warning ····· 6-34
[6] Pid PID alarm ····· 6-35
[7] PTC PTC thermistor activated ····· 6-35
[8] rAF Cooling capability drop ····· 6-35
[9] rEF Reference command loss detected ····· 6-35
[10] rTE Machine life (Cumulative motor running hours) ····· 6-35
[11] UTL Low torque detection ····· 6-36
[12] Lob Low battery warnig (for Multi-function Keypad (TP-A2SW)) ····· 6-36
[13] PA1, PA2 PID control 1, 2 warning output ····· 6-36
[14] PAA, PAb, PAC External PID control 1, 2, 3 warning output ····· 6-36
[15] SLA Slave alarm ····· 6-36
6.5 Other Errors ····· 6-37
6.5.1 Abnormal motor operation ····· 6-37
[1] The motor does not rotate ····· 6-37
[2] The motor rotates, but the speed does not increase ····· 6-39
[3] The motor runs in the opposite direction to the command ····· 6-40
[4] Speed fluctuation or current oscillation (e.g., hunting) occurs during running at constant speed ····· 6-41

[5] Unpleasant noises are emitted from motor or noises fluctuate ····· 6-42
[6] Motor is not accelerated or decelerated according to set-up acceleration or deceleration times ····· 6-43
[7] The motor does not restart even after the power recovers from a momentary power failure ····· 6-44
[8] Motor generates heat abnormally ····· 6-44
[9] The motor does not run as expected ····· 6-44
[10] Motor stalls during acceleration ····· 6-45
6.5.2 Problems with inverter settings ····· 6-46
[1] Nothing appears on the keypad ····· 6-46
[2] The desired menu is not displayed ····· 6-46
[3] Display of under bars (_ _ _ _ _) ····· 6-46
[4] Display of center bars (- - - - -) ····· 6-47
[5] [ ] Display of parenthesis ····· 6-47
[6] Data of function codes cannot be changed ····· 6-47
[7] Function code data are not changeable (change from link functions) ····· 6-48
[8] En.OFF appears ····· 6-48
[9] Other status display ····· 6-48

6.1 Protective Functions

In order to prevent the system going down or to shorten recovery time, FRENIC-MEGA is equipped with various protective functions shown in Table 6.1-1 below. The protective functions marked with an asterisk (*) in the table are disabled by factory default.
Enable them according to your needs.

The protective functions include, for example, the “Alarm” detection function which, upon detection of an abnormal state, displays the alarm code on the LED monitor and causes the inverter to trip, the “Warning” detection function which displays the alarm code but lets the inverter continue the current operation, and other warning signal output functions.

If any problem arises, understand the protective functions listed below and follow the procedures given in sections 6.2 and onwards for troubleshooting.

Table 6.1-1 Abnormal state detection (alarms/warnings)

Protective function	Description	Related function code
“Alarm” detection	This function detects an abnormal state, displays the corresponding alarm code on the keypad, and causes the inverter to trip. Refer to “6.3.1 Alarm code list” for alarm codes, and refer to “6.3.2 Causes, checks and measures of alarms” for details on the alarm content. The inverter is capable of retaining and displaying the cause (alarm code) for the last 10 trips, as well as detailed data for each part for the last 4 trips.	H98
“Warning” detection*	All abnormal conditions are detected, and if a minor abnormality is detected, a warning code is displayed, and operation continues without tripping the inverter. The warning display operation can be selected with the warning selection (function codes H81, H82, H83).	H81 H82 H83
Stall prevention	When the output current exceeds the current limiter level (function code F44) during acceleration/ deceleration or constant speed running, this function decreases the output frequency to avoid an overcurrent trip.	F44
Overload prevention control*	Before the inverter trips due to a cooling fin overheat (OH1) or inverter overload (OLU), this function decreases the output frequency of the inverter to reduce the load.	H70
Anti-regenerative control*	If regenerative energy returned exceeds the inverter's braking capability, this function automatically increases the deceleration time or controls the output frequency to avoid an overvoltage trip.	H69
Deceleration characteristics* (Improvement of braking performance)	During deceleration, this function increases the motor energy loss and decreases the regenerative energy returned to avoid an overvoltage trip.	H71
Reference loss detection*	This function detects a frequency reference loss (due to a broken wire, etc.), issues the alarm, and continues the inverter operation at the specified frequency.	E65
Automatic lowering of carrier frequency	Before the inverter trips due to an abnormal surrounding temperature or output current, this function automatically lowers the carrier frequency to avoid a trip.	H98
Motor overload early warning*	When the inverter output current has exceeded the specified level, this function issues the “Motor overload early warning” signal before the thermal overload protection function causes the inverter to trip for motor protection (only for the 1st motor).	E34 E35
Retry*	When the inverter has stopped because of a trip, this function allows the inverter to automatically reset and restart itself. The number of retries and the latency between stop and reset can be specified.	H04 H05

Table 6.1-1 Cont.

Protective function	Description	Related function code
Forced stop*	Upon receipt of the “Force to stop” terminal command ***STOP***, this function interrupts the run and other commands currently applied in order to forcedly decelerate the inverter to a stop state.	H56
Surge protection	This function protects the inverter from a surge voltage between main circuit power lines and the ground.	-
Momentary power failure protection*	• If a momentary power failure for 15 ms or longer occurs, a protective operation (inverter stop) is activated. • When momentary power failure restart is selected, the inverter restarts automatically after voltage restoration within a set-up time (momentary power failure permissible time).	F14

6.2 Before Proceeding with Troubleshooting

⚠WARNING⚠

- If any of the protective functions has been activated, first remove the cause. Then, after checking that all run commands are set to OFF, release the alarm. If the alarm is released while any run command is set to ON, the inverter may supply the power to the motor, running the motor.

Failure to observe this could result in injury.

- Even if the inverter cuts off the supply of power to the motor, if voltage is being applied to main power supply input terminals L1/R, L2/S, and L3/T, voltage may be output to inverter output terminals U, V and W.
- Carry out an inspection after first waiting for at least 5 minutes for units of FRN0115G2S-2G/FRN0060G2■-4G or below, or 10 minutes for units of FRN0146G2S-2G/FRN0085G2■-4G or above after turning off the power, ensuring that the LED monitor and charge lamp are off, and using a device such as a tester to ensure that the DC intermediate circuit voltage across main circuit terminals P(+)-N(-) has dropped to a safe level (+25 VDC or less).

Failure to observe this could result in electric shock.

Follow the procedure below to solve problems.

(1) Is wire connection correct?

See Chapter 2 “2.2.1 Basic connection diagram”.

(2) Check whether an alarm code or warning code is displayed on the LED monitor.

- If an Alarm Code Appears on the LED Monitor — To section 6.3
- If a Warning Code is Displayed — To section 6.4
- Other Errors

<u>Abnormal motor operation</u> — To section 6.5.1

6.5.1 [1] The motor does not rotate
6.5.1 [2] The motor rotates, but the speed does not increase
6.5.1 [3] The motor runs in the opposite direction to the command
6.5.1 [4] Speed fluctuation or current oscillation (e.g., hunting) occurs during running at constant speed
6.5.1 [5] Unpleasant noises are emitted from motor or noises fluctuate
6.5.1 [6] Motor is not accelerated or decelerated according to set-up acceleration or deceleration times
6.5.1 [7] The motor does not restart even after the power recovers from a momentary power failure
6.5.1 [8] Motor generates heat abnormally
6.5.1 [9] The motor does not run as expected
6.5.1 [10] Motor stalls during acceleration

<u>Problems with inverter settings</u> — To section 6.5.2

6.5.2 [1] Nothing appears on the keypad
6.5.2 [2] The desired menu is not displayed
6.5.2 [3] Display of under bars (_ _ _ _ _)
6.5.2 [4] Display of center bars (- - - - -)
6.5.2 [5] [ ] Display of parenthesis
6.5.2 [6] Data of function codes cannot be changed
6.5.2 [7] Function code data are not changeable (change from link functions)

If any problems persist after the above recovery procedure, contact your Fuji Electric representative.

6.3 If an Alarm Code Appears on the LED Monitor

6.3.1 Alarm code list

When an alarm is detected, check the alarm code displayed on the keypad 7-segment LED. Refer to "6.3.2 Causes, checks and measures of alarms" and take the appropriate countermeasures.

When one alarm code has more than one cause, alarm subcodes are provided to make it easy to identify the cause. When there is only one cause, the alarm subcode is displayed as “-” and described as “-.”

Furthermore, certain types of alarms can be changed to warnings, allowing inverter operation to be continued. (Refer to “Warning selection possible” in Table 6.3-1 below.)

Note Continuing operation while a warning is occurring may cause damage to devices, and therefore the inverter should be stopped promptly from an external source.

To enter Programming mode while an alarm is occurring, press the PRG RESET key while holding down the STOP key.

See Chapter 3 “3.4.6 Reading alarm information “Alarm Information: 6.AL”” for the method of checking the alarm codes.

Table 6.3-1 Alarm code and subcode list

Alarm code	Alarm code name	Warning selection possible	Retry	Alarm subcode	Alarm subcode name	Ref. page
CA1 to CA5	User-defined alarm	Y	-	0	-	6-8
CoF	Current input terminals [C1], [C2] disconnect detection	Y	-	1	Terminal [C1] disconnection	6-8
				2	Terminal [C2] disconnection	
				3	Terminal [C1], [C2] disconnection	
dbA	Braking transistor failure	-	-	0	-	6-8
dbH	Braking resistor overheat	Y	Y	0	-	6-9
ECF	STO input (EN1,EN2) circuit failure	-	-	0	-	6-9
ECL	Customizable logic error	-	-	0	-	6-10
EF	Ground fault protection (FRN0032G2S-2G/ FRN0018G2■-4G or above)	-	-	0	-	6-10
Er1	Memory error	-	-	1-16	For investigation by manufacturer	6-10
Er2	Keypad communications error	-	-	1-2	For investigation by manufacturer	6-11
Er3	CPU error	-	-	1-9000	For investigation by manufacturer	6-11
Er4	Option communications error	Y	-	1	Communication error at option A	6-11
				2	Communication error at option B	
				3	Communication error at option C	
				10	Communication error due to multiple causes	
Er5	Option error	Y	-	0	Timeout	6-11
				1-10	For investigation by manufacturer	

Table 6.3-1 cont.

Alarm code	Alarm code name	Warning selection possible	Retry	Alarm subcode	Alarm subcode name	Ref. page
Er6	Operation protection	-	-	1	STOP key priority/forced stop (STOP terminal)	6-12
				2	Start check function	
				3	Start check function (when operation is permitted)	
				4	Start check function (when reset is turned on)	
				5	Start check function (when the power recovers in powering on)	
				6	Start check function (keypad connection)	
				8	Brake signal error	
				9-16	For investigation by manufacturer	
Er7	Tuning error	-	-	1-4	Abnormal tuning results due to interphase voltage unbalance, output phase loss, etc.	6-13
				6	Abnormal output current	
				7	Operation command OFF during motor tuning	
				8	Forced stop during motor tuning	
				9	BX command during motor tuning	
				10	Hardware current limit during motor tuning	
				11	Occurrence of low voltage (LV) during motor tuning	
				12	Failure due to prevention of reverse rotation during motor tuning	
				13	Over upper limit frequency during motor tuning	
				14	Switching to commercial power during motor tuning	
				15	Occurrence of alarm during motor tuning	
				16	Change of run command source during motor tuning	
				18	Over acceleration time during motor tuning	
				24	Terminal [EN1], [EN2] error during motor tuning	
				5000 or higher	Refer to Chapter 4 “4.8.1 [5], ■ Tuning errors”.	
				Other than above	For investigation by manufacturer	
Er8	RS-485 communication error (Communication port 1)	Y	-	0	-	6-14
Erd	Out-of-step detection	-	-	5001-5010	For investigation by manufacturer	6-15
ErC	Magnetic pole position detection error	-	-	5002-5008	For investigation by manufacturer	6-16
ErE	Speed mismatch/ excessive speed deviation	Y	-	1	Signs of speed command and speed detection are inconsistent.	6-17
				3	In the case of excessive speed deviation (|detected speed|>|speed command|)	
				5	Detected speed remains 0Hz irrespective of speed command.	
				7	In the case of excessive speed deviation (|detected speed|<|speed command|)	

Table 6.3-1 cont.

Alarm code	Alarm code name	Warning selection possible	Retry	Alarm subcode	Alarm subcode name	Ref. page
ErF	Data saving error during undervoltage	-	-	0	-	6-18
ErH	Hardware error	-	-	11	Option board (A port) connection defect	6-18
				12	Option board (B port) connection defect	
				13	Option board (C port) connection defect	
				Other than above	For investigation by manufacturer	
Ero	Positioning control error	Y	-	1 to 5	For investigation by manufacturer	6-18
ErP	RS-485 communications error (Communication port 2)	Y	-	0	-	6-14
Err	Mock alarm	-	-	0	-	6-19
FUS	Fuse blown	-	-	0	FRN0346G2S-2G or higher (200V series) FRN0261G2■-4G or higher (400V series)	6-19
FAL	DC fan locked	Y	-	0	FRN0215G2S-2G or higher (200V series) FRN0217G2■-4G or higher (400V series)	6-19
Lin	Input phase loss	-	-	1-2	For investigation by manufacturer	6-19
LoP	Password protection	-	-	1	Password 1 protection	6-20
				2	Password 2 protection	
LU	Undervoltage	-	-	1	Occurrence of low voltage during gate ON (F14=0)	6-20
				2	Run command ON during low voltage (F14=0, 2)	
				3	LV trip on power recovery from a momentary power failure (F14=1)	
				4 to 5	For investigation by manufacturer	
nrb	NTC thermistor wire disconnection	-	-	0	-	6-20
OC1	Instantaneous overcurrent	-	Y	1 to 13 5001	For investigation by manufacturer	6-21
OC2						
OC3						
OH1	Heat sink overheat	Y	Y	1 to 14	For investigation by manufacturer	6-22
OH2	External alarm	Y	-	0	-	6-22
OH3	Inverter internal overheat	Y	Y	0	Internal air overheat	6-22
				1	Charging resistor overheat	
				Other than above	For investigation by manufacturer	
OH4	Motor protection (PTC/NTC thermistor)	-	Y	0	-	6-23
OH6	Charging resistor overheat	Y	Y	0	-	6-23
OL1 to OL4	Overload of motors 1 through 4	Y	Y	0	-	6-24
OLU	Inverter overload	-	Y	1	IGBT protection	6-25
				2	Inverter overload	
				10	For investigation by manufacturer	

Table 6.3-1 cont.

Alarm code	Alarm code name	Warning selection possible	Retry	Alarm subcode	Alarm subcode name	Ref. page
OPL	Output phase loss	-	-	1-10	For investigation by manufacturer	6-26
OS	Overspeed	-	-	0	-	6-26
OU1	Overvoltage	-	Y	1 to 12	For investigation by manufacturer	6-27
OU2						
OU3						
PbF	Charger circuit error (FRN0008G2S-2G/ FRN0004G2■-4G or above)	-	-	0 to 2	For investigation by manufacturer	6-27
PG	PG wire disconnection	-	-	10 to 20	For investigation by manufacturer	6-28
dO	Excessive positioning deviation	-	-	0	-	6-28
Fod	Forced operation (alarm stoppage does not occur.)	-	-	-	-	6-28
FoL *1	Filter clogging error	○	-	-	-	6-29
PU1, PU2 *1	PID control 1, 2 Feedback error	○	-	-	-	6-29
PUA, PUb, PUC *1	External PID control 1, 2, 3 Feedback error	○	-	-	-	6-30
Pdr1, Pdr2 *1	Drought protection	○	-	-	-	6-31
PoL *1	End of curve protection (PID control 1)	○	-	1-7	For investigation by manufacturer	6-32
rLo *1	Anti jam (PID control 1)	-	-	-	-	6-32
roC *1	Control of maximum starts per hour (PID control 1)	○	-	-	-	6-32

*1 Supported with ROM0500 or later.

Note)
- All protective functions are automatically reset if the control power voltage drops to a level at which inverter control circuit operation can no longer be sustained.
- The protection stop condition can be canceled by pressing the keypad (PRG/RESET) key, or turning between the X (assigned to RST) and CM terminals OFF to ON. However, the reset operation will not be valid until the cause of the alarm has been eliminated.
- If multiple alarms have occurred, the reset operation will not be valid until the cause of all alarms has been eliminated. (The cause of uncleared alarms can be checked at the keypad.)
- When assigned to warnings, terminals [30A/B/C] do not work.

6.3.2 Causes, checks and measures of alarms

[1] CA1 to CA5 User-defined alarm

Phenomenon: An alarm defined with customizable logic occurred.

Possible cause	Check and measures
An error is displayed if the alarm conditions defined by the user with customizable logic are met. (This is not an error at the inverter itself.)	Check the input/output status in accordance with the alarm conditions set with customizable logic.

[2] CoF **Current input terminals [C1], [C2] disconnect detection**

Phenomenon: A current input signal line break occurred.

Possible cause	Check and measures
(1) Current input command wire break [Subcodes: 1, 2, 3]	Check whether current is flowing to current input terminals [C1] and [C2]*. ➔ Terminal [C1] wire break detection [Subcode: 1] Terminal [C2]* wire break detection [Subcode: 2] Terminal [C1], [C2]* wire break detection [Subcode: 3] *: When equipped with OPC-AIO (option).
(2) The inverter was affected by strong electrical noise.	Check noise countermeasures (grounding condition, signal line and communication cable/main circuit wiring installation method, etc.) ➔ Enhance noise countermeasures. ➔ Keep the main circuit wiring and control circuit wiring as far apart as possible.

[3] dbA **Braking transistor failure**

Phenomenon: Faulty operation of the braking transistor was detected.

Possible cause	Check and measures
Braking resistor connection terminal miswiring	Check whether the braking resistor has been correctly wired between main circuit terminals [P+] and [DB]. Check whether the motor wiring has been mistakenly connected to terminal [DB]. ➔ Ask for inverter repair to be carried out if wiring work has been carried out incorrectly.
The braking transistor is broken.	Check whether resistance of the braking resistor is correct or there is a misconnection of the resistor. ➔ If there are no problems, ask for inverter repair to be carried out.

[4] dbH Braking resistor overheat

Phenomenon: The electronic thermal protection for the braking resistor has been activated.

Possible cause	Check and measures
(1) Braking load is too heavy. [Subcode: 0]	Reconsider the relationship between the braking load estimated and the real load. ➔ Lower the real braking load. ➔ Review the selection of the braking resistor and increase the braking capability. Modification of related function codes data (F50, F51, and F52) may be also required.
(2) Specified deceleration time is too short. [Subcode: 0]	Recalculate the deceleration torque and time needed for the load currently applied, based on a moment of inertia for the load and the deceleration time. ➔ Increase the deceleration time (function codes F08, E11, E13, E15, and H56). ➔ Review the selection of the braking resistor and increase the braking capability. Modification of related function codes data (F50, F51, and F52) may be also required.
(3) Incorrect setting of function code data F50, F51, and F52. [Subcode: 0]	Recheck the modes of the braking resistor. If using a braking resistor (option) on a model (FRN0046G2S-2G/ FRN0023G2■-4G or below) with built-in braking resistor, check whether the braking resistor electronic thermal overload relay setting been changed. ➔ Review data of function codes F50, F51, and F52, then modify them if required.

Note The inverter issues an overheat alarm of the braking resistor by monitoring the magnitude of the braking load, not by measuring its surface temperature.

When the braking resistor is used so frequently as to exceed the settings made by function codes F50, F51, and F52, therefore, the inverter issues an overheat alarm even if the surface temperature of the braking resistor does not rise. To obtain full performance of the braking resistor, configure function codes F50, F51, and F52 while actually measuring the surface temperature of the braking resistor.

[5] ECF STO input (EN1,EN2) circuit failure

Phenomenon: Enable circuit state was diagnosed and a circuit failure was detected.

Possible cause	Check and measures
(1) Control terminal block board contact defect	Confirm that the control terminal block board has been firmly mounted in the inverter. ➔ Alarm is released by turning on again.
(2) Enable circuit logic failure	• Confirm that outputs from safety switch etc. are inputted by the same logic (High/High or Low/Low) with terminals [EN1] and [EN2]. • Ensure that the 2 poles for the SW7 switch on the control board are both ON/ON or OFF/OFF. ➔ The alarm is cleared by pressing the PRG RESET key, or by turning the power OFF and ON again.
(3) A failure (single failure) of enable circuit (safety stop circuit) was detected.	If the circuit failure is not removable by the procedures above, the inverter is out of order. ➔ Contact your Fuji Electric representative.

[6] ECL Customizable logic error

Phenomenon: A customizable logic setting error was detected.

Possible cause	Check and measures
(1) Setting of the selection of customizable logic operation was changed during operation.	Check whether the selection (Function code U00) of customizable logic operation is changed during operation. ➔ Do not change the selection of customizable logic operation during operation to prevent a danger.

[7] EF Ground fault protection (FRN0032G2S-2G/FRN0018G2□-4G or above)

Phenomenon: Ground-fault current flowed from the inverter output terminals.

Possible cause	Check and measures
(1) Ground faults have occurred at the inverter output terminals.	• Disconnect the wiring from the output terminals (U, V, and W) and perform a Megger test. ➔ Remove the grounded parts (including replacement of the wires, relay terminals and motor). • If ground fault protection is displayed when the inverter is run with the wiring disconnected from the inverter output terminals (U, V, and W). ➔ The inverter may be faulty. Contact your Fuji Electric representative.

Note The purpose of this ground fault protection is to protect the inverter. If used to prevent accidents involving the human body, or to prevent fire, connect a separate earth leakage protective relay or earth leakage circuit breaker.

[8] Er 1 Memory error

Phenomenon: Error occurred in writing the data to the memory in the inverter.

Possible cause	Check and measures
(1) When writing data (especially initializing or copying data), the inverter was shut down so that the voltage to the control PCB has dropped.	Initialize data by data initialization (H03), and check whether an alarm can be released by PRG/RESET key after finishing the initialization. ➔ Revert the initialized function code data to their previous settings, then restart the operation.
(2) The inverter was affected by strong electrical noise when writing data (especially initializing).	Check if appropriate noise control measures have been implemented (e.g., correct grounding and routing of control and main circuit wires). Also, perform the same check as described in (1) above. ➔ Implement noise control measures. Revert the initialized function code data to their previous settings, then restart the operation.
(3) The control PCB failed.	Initialize data by data initialization (H03), and check whether an alarm continues even when the release of the alarm is attempted by PRG/RESET key after finishing the initialization. ➔ The control PCB (on which the CPU is mounted) is defective. Contact your Fuji Electric representative.
(4) The power was cut and the control power supply dropped while saving user setting values with function code H193.	Save the user setting values with function code H193, and confirm whether the alarm persists even after canceling the alarm with the PRG/RESET key when saving is complete. ➔ The control PCB (on which the CPU is mounted) is defective. Contact your Fuji Electric representative.
(5) The inverter was affected by external noise while saving user setting values with function code H193.	Check if appropriate noise control measures have been implemented (e.g., correct grounding and routing of control and main circuit wires). Also, perform the same check as described in (4) above. ➔ The control PCB (on which the CPU is mounted) is defective. Contact your Fuji Electric representative.

[9] Er2 Keypad communications error

Phenomenon: A communication error occurred between the keypad and the inverter.

Possible cause	Check and measures
(1) Broken communication cable or poor contact.	Check continuity of the cable, contacts and connections. ➔ Re-insert the connector firmly. ➔ Replace the cable.
(2) Connecting many control wires hinders the front cover from being mounted, lifting the keypad.	Check the mounting condition of the front cover. ➔ Reduce the wire size. (Recommended wire size (0.3 to 0.75 mm^2) ➔ Change the wiring layout inside the unit so that the front cover can be mounted firmly.
(3) The inverter was affected by strong electrical noise.	Check if appropriate noise control measures have been implemented (e.g., correct grounding and routing of communication cables and main circuit wires). ➔ Take noise countermeasures. For details, refer to Appendix A .
(4) A keypad fault occurred.	Replace the keypad with another one and check whether the Er2 error occurs. ➔ Replace the keypad.

[10] Er3 CPU error

Phenomenon: A CPU error (e.g. erratic CPU operation) occurred.

Possible cause	Check and measures
(1) The inverter was affected by strong electrical noise.	Check noise countermeasures (grounding condition, signal line and communication cable/main circuit wiring installation method, etc.) ➔ Implement noise control measures.

[11] Er4 Option communications error

Phenomenon: A communication error occurred between the option card and the inverter.

Possible cause	Check and measures
(1) There was a problem with the connection between the option card and the inverter.	Check whether the connector on the option card is properly engaged with that of the inverter. ➔ Reload the option card into the inverter.
(2) The inverter was affected by strong electrical noise.	Check noise countermeasures (grounding condition, signal line and communication cable/main circuit wiring installation method, etc.) ➔ Implement noise control measures.

[12] Er5 Option error

An error detected by the option card.
Refer to the instruction manual of the option card for details.

[13] Er6 Operation protection

Phenomenon: An incorrect operation was attempted.

Possible cause	Check and measures
(1) STOP key was pressed when the STOP key is effective (function code H96=1, 3). [Subcode: 1]	Check whether the STOP key was pressed in a state that a run command is inputted via terminal block or communication. ➔ If this was not intended, check the setting of function code H96.
(2) The start check function was activated when function code H96 = 2 or 3. [Subcode: 2 to 6]	Check that any of the following operations has been performed with a run command being entered. • Power on • Release of alarm • Switching to link operation command ➔ Review the sequence, etc. to avoid input of a run command when this error occurs. If this was not intended, check the setting of function code H96. Turn the run command OFF before releasing the alarm.
(3) The forced stop (digital input terminal) ***STOP*** was turned OFF. [Subcode: 1]	Check that the forced stop ***STOP*** is turned off. ➔ If this was not intended, check the settings of function codes E01 to E09 for terminals [X1] to [X9].
(4) Brake check signal ***BRKE*** and brake signal ***BRKS*** mismatch [Subcode: 8]	Check whether the signal input to the X terminal to which the brake check signal ***BRKE*** is assigned matches the brake signal ***BRKS*** output from the Y terminal. • Check for a signal line break. • Check whether the logic is correct. • If there is an operation delay, check the function code H180 (brake signal) time.

[14] Er7 Tuning error

Phenomenon: Auto-tuning failed.

Possible cause	Check and measures
(1) Motor is not wired correctly	➔ Check whether the motor wiring is causing a phase interruption, and wire all 3 phases correctly. ➔ If there is a contactor connected to the inverter-motor wiring, check for abnormalities in the contacts. ➔ Check whether there is an ammeter, etc., inserted in the inverter-motor wiring and causing an interphase voltage unbalance.
(2) V/f, torque boost, or motor rated values have not been set correctly.	Check whether the data of function codes (F04*, F05*, F09*, H50, H51, H52, H53, H65, H66, P02*, P03*) agree with the motor modes.
(3) Sequence error	If run command OFF, forced stop “STOP,” coast to a stop “BX,” etc., has been input during tuning. ➔ Do not turn run command OFF during tuning.
(4) Rotation tuning (function code P04* = 2) was performed	➔ Check the condition of the mechanical brake. Also check whether the motor is mechanically capable of rotating. ➔ Check whether the acceleration time setting is short and the current limiter is operating.
(5) If the tuning range is exceeded	Tuning may not be possible when the inverter capacity differs greatly from the motor capacity, or when using special motors such as high-speed motors. ➔ Reconsider the inverter capacity. ➔ Do not use auto-tuning, and do not use auto torque boost (set function code F37* = 1).
(6) If undervoltage occurs	If DC intermediate voltage is low and tuning is performed ➔ Check whether the main power is input normally.

📖 The explanations for function codes with an asterisk (*) are limited to motor 1. If using motor 2 to 4, replace with the relevant function codes in Chapter 5 "Table 5.3-2 Function codes to be switched".

[15] Er8 RS-485 communications error (Communication port 1)/ ErP RS-485 communications error (Communication port 2)

Phenomenon: A communication error occurred during RS-485 communication.

Possible cause	Check and measures
(1) Communication conditions of the inverter do not match that of the host equipment.	Compare the settings of the function codes (y01 to y10, y11 to y20) with those of the host equipment. ➔ Correct any settings that differ.
(2) Even though no-response error detection time (functoin codes y08, y18) has been set, communication is not performed within the specified cycle.	Check the host equipment. ➔ Change the settings of host equipment software or disable the no-response error detection (function codes y08, y18 = 0).
(3) The host equipment did not operate due to defective software, settings, or defective hardware.	Check the host equipment (e.g., PLCs and personal computers). ➔ Remove the cause of the equipment error.
(4) The RS-485 converter did not operate due to incorrect connections and settings, or defective hardware.	Check the RS-485 converter (e.g., check for poor contact). ➔ Change the various RS-485 converter settings, reconnect the wires, or replace hardware with recommended devices as appropriate.
(5) Broken communication cable or poor contact.	Check the continuity of the cables, contacts and connections. ➔ Replace the cable.
(6) The inverter was affected by strong electrical noise.	Check if appropriate noise control measures have been implemented (e.g., correct grounding and routing of communication cables and main circuit wires). ➔ Take noise countermeasures. ➔ Take noise reduction measures at the host side. ➔ Replace the RS-485 converter with a recommended insulated one.
(7) Terminating resistor is not properly configured.	Check that the inverter serves as a terminating device in the network. ➔ Set terminal resistor select switches for RS-485 communication (SW3/SW2) correctly. In other words, turn the switch(es) to ON if required.

[16] Erd Out-of-step detection

Phenomenon: Synchronous motor step-out was detected. The magnetic pole position at startup failed to be detected.

Possible cause	Check and measures
(1) Function code settings do not agree with the motor characteristics.	Check whether function codes F04, F05, P01, P02, P03, P60, P61, P62, P63, P64 agree with the motor constants. ➔ Perform auto-tuning.
(2) Magnetic pole position detection method is not appropriate.	Confirm that the magnetic pole position detection mode matches the motor type. ➔ Match the magnetic pole position detection mode selection (function code P30) to the motor type.
(3) Starting frequency (continuation time) (function code F24) is insufficient.	Check whether a starting frequency (continuation time) (function code F24) is set optimally, after setting te magnetic pole position detection mode selection (function code P30) to “0” or “3.” ➔ Set a period of time during which motor can rotate by one or more revolutions. F24 ≥ P01/2/F23 (P01: Number of poles, F23: Starting frequency)
(4) Starting torque is insufficient.	Check the data of acceleration times (function codes F07, E10, E12, E14) and a current command value on a start (function code P74). ➔ Change the acceleration time to match the load. ➔ Increase the current command value at startup. ➔ Increase the control switching level (function code P89) setting.
(5) Load is small.	Check the data of a reference current at starting (function code P74). ➔ Decrease the reference current at starting. Set it to 80% or lower when running a motor single unit in a test run etc.
(6) A phase was missing in the connection between the inverter and the motor.	➔ Properly connect the motor to the inverter.

[17] ErC Magnetic pole position detection error

Phenomenon: When performing vector control with sensor (synchronous motors), an error occurred when performing synchronous motor magnetic pole position detection.

Possible cause	Check and measures
(1) The inverter settings are not appropriate.	Check whether the motor being used, the existence and type of the speed/magnetic pole position sensor, the control method (F42) and feedback pulse input method (d14), and the feedback pulse count (d15) are consistent. ➔ Check the machine configuration (motor speed/magnetic pole position sensor type and specifications), and set F42, d14, and d15 correctly. Ensure that the magnetic pole position detection method selection (P30) has been set to either “0” or “3”, and that the magnetic pole position sensor offset (P95) is not “999 (offset not adjusted)”. ➔ Set P95 correctly. (Auto tuning is also possible. 📖 See “4.8.2 [3] Synchronous motor tuning method”.)
(2) There is a problem with the speed/magnetic pole position sensor connection.	Check for speed/magnetic pole position sensor output wiring contact defects, and check the AB phase or UVW phase sequence. ➔ Connect the feedback input option card and speed/magnetic pole position sensor correctly. Check for motor wiring contact defects, and check the phase sequence. ➔ Connect the motor correctly to the inverter.
(3) The motor rotation direction and sensor output do not match.	
(4) There is a problem with the option card connection.	Check whether the connector on the option card is properly engaged with that of the inverter. ➔ Reinsert the option card into the inverter.
(5) The inverter was affected by strong electrical noise.	Check noise countermeasures (grounding condition, signal line and communication cable/main circuit wiring installation method, etc.) ➔ Take noise countermeasures.

[18] ErE Speed mismatch / Excessive speed deviation

Phenomenon: An excessive deviation appears between the speed command and the detected speed.

Possible cause	Check and measures
(1) Incorrect setting of function code data.	Check the motor parameter “Number of poles” (P01*). ➔ Specify the P01* data in accordance with the motor to be used.
(2) Overload	Measure the inverter output current. ➔ Reduce the load.
	Check whether any mechanical brake is applied. ➔ Release the mechanical brake.
(3) The motor speed does not increase due to the current limiter operation.	Check the data of function code F44 (Current limiter (Level)). ➔ Change the F44 data correctly. Or, set the F43 data to “0” (Disable) if the current limiter operation is not needed.
	Check the data of the function codes (F04*, F05*, P01*-P12*) to see if V/f is set correctly. ➔ Match the V/f pattern setting with the motor ratings. ➔ Change the function code data in accordance with the motor parameters.
(4) Function code settings do not match the motor characteristics.	Confirm that P01*, P02*, P03*, P06*, P07*, P08*, P09*, P10*, P12* match the motor constants. ➔ Perform auto-tuning of the inverter, using the function code P04*.
(5) Wiring to the motor is incorrect.	Check the wiring to the motor. ➔ Connect the inverter output terminals U, V, and W to the motor input terminals U, V, and W, respectively.
(6) The motor speed does not increase due to the torque limiter operation.	Check the data of F40 (Torque limiter (Level)). ➔ Change the F40 data correctly. Or, set the F40 data to “999” (Disable) if the torque limiter operation is not needed.
(7) The wire between the pulse generator (PG) and the option card is broken or incorrect.	Check whether the pulse generator (PG) is correctly connected to the option card or any wire is broken. ➔ Check whether the PG is connected correctly. Or, tighten the related terminal screws. ➔ Check whether any contact part bites the wire sheath. ➔ Replace the wiring.
(8) Anti-regenerative control occurred during deceleration, causing delayed deceleration.	Check the speed agreement (detection width) (d21), (detection timer) (d22), and PG error selection (d23) data. ➔ Change d21 and d22 to an appropriate value, or disable the speed mismatch/excessive speed deviation alarm by setting d23 to “0”.

📖 The explanations for function codes with an asterisk (*) are limited to motor 1. If using motor 2 to 4, replace with the relevant function codes in Chapter 5 "Table 5.3-2 Function codes to be switched".

[19] ErF Data saving error during undervoltage

Phenomenon: The inverter failed to save data such as the frequency commands and PID commands (which are specified through the keypad), or the output frequencies modified by the ***UP/DOWN*** signal commands when the power was turned OFF.

Possible cause	Check and measures
(1) During data saving performed when the power was turned OFF, the voltage fed to the control PCB dropped in an abnormally short period due to the rapid discharge of the DC intermediate circuit.	Check how long it takes for the DC intermediate circuit voltage to drop to the preset voltage when the power is turned OFF. ➔ Remove whatever is causing the rapid discharge of the DC intermediate circuit voltage. After pressing the PRG/RESET key and releasing the alarm, return the data of the relevant function codes (such as the frequency commands and PID commands (specified with the keypad) or the output frequencies modified by the UP/DOWN signal commands) back to the original values and then restart the operation.
(2) The inverter operation was affected by strong electrical noise during data saving performed when the power was turned OFF.	Check if appropriate noise control measures have been implemented (e.g., correct grounding and routing of control and main circuit wires). ➔ Take noise countermeasures. After pressing the PRG/RESET key and releasing the alarm, return the data of the relevant function codes (such as the frequency commands and PID commands (specified with the keypad) or the output frequencies modified by the ***UP/DOWN*** signal commands) back to the original values and then restart the operation.
(3) The control circuit failed.	Check if ErF occurs each time the power is turned ON. ➔ The control PCB (on which the CPU is mounted) is defective. Contact your Fuji Electric representative.

[20] ErH Hardware error

Phenomenon: The combination between PCBs is abnormal.

Possible cause	Check and measures
(1) Control PCB and power supply PCB combination abnormality	It is necessary to replace the control PCB or power supply PCB. ➔ Contact your Fuji Electric representative.
(2) Option PCB connection defect [Subcodes: 11, 12, 13]	Is the option PCB correctly connected to the connection port (A, B, or C) on the control board? ➔ A port connection defect [subcode 11] B port connection defect [subcode 12] C port connection defect [subcode 13]

[21] Ero Positioning control error

Phenomenon: Excessive position deviation occurred on servo lock / master-follower operation.

Possible cause	Check and measures
(1) Insufficient gain in positioning control system (servo lock)	Readjust the settings of J97 (Servo lock (Gain)) and d03 (Speed control 1 P (Gain)).
(2) Position deviation is excessive. (master-follower operation)	Check whether the excessive error detection level (d78) is set up properly.

[22] Err Mock alarm

Phenomenon: The LED displays the alarm Err.

Possible cause	Check and measures
(1) Keep STOP key + FUNC/DATA key pressed for five seconds or longer.	➔ To escape from this alarm state, press the PRG/RESET key.
(2) Set function code H45 (simulation fault) to “1”.	

[23] FUS Fuse blown

Phenomenon: The fuse inside the inverter is blown.

Possible cause	Check and measures
(1) The fuse blew due to shorting of the inverter internal circuits.	Check whether excessive external surge or noise has occurred. ➔ Take surge and noise countermeasures. ➔ Consult your Fuji Electric representative for repair.

[24] FAL DC fan locked

Phenomenon: An inverter internal DC fan lock was detected.

Possible cause	Check and measures
(1) Inverter internal cooling fan error	Failure of the air circulation fan inside the inverter (FRN0215G2S-2G/FRN0217G2■-4G or above) ➔ Replace the cooling fan.

[25] Lin Input phase loss

Phenomenon: Input phase loss occurred, or interphase voltage unbalance rate was large.

Possible cause	Check and measures
(1) Breaks in wiring to the main power input terminals.	Measure the input voltage. ➔ Repair or replace the main circuit power input wires or input devices (MCCB, MC, etc.).
(2) The screws on the main power input terminals are loosely tightened.	Check if the screws on the main power input terminals have become loose. ➔ Tighten the terminal screws to the recommended torque.
(3) Interphase voltage unbalance among three phases was too large.	Measure the input voltage. ➔ Connect an AC reactor (ACR) to lower the voltage unbalance between input phases. ➔ Increase the inverter capacity.
(4) Overload cyclically occurred.	Measure the ripple wave of the DC intermediate circuit voltage. ➔ If the ripple is large, increase the inverter capacity.
(5) Single-phase voltage was input to the three-phase input inverter.	Check the inverter type. ➔ Apply three-phase power.

Note The purpose of this function is to protect the inverter. Even with open phase input, if the motor load is light, the motor may continue to run without being detected.

The input phase loss protection can be disabled with the function code H98.

[26] LoP Password protection

Phenomenon: The wrong user password was entered more than the prescribed number of times.

Possible cause	Check and measures
Phenomenon: User password 1 or 2 was entered incorrectly more than the prescribed number of times.	Clear the alarm. ➔ Turn OFF the inverter power, and then turn it back ON again. If you have forgotten your password: ➔ Contact the distributer or machine set manufacturer.

[27] LU Undervoltage

Phenomenon: DC intermediate circuit voltage has dropped below the undervoltage detection level.

Possible cause	Check and measures
(1) A momentary power failure occurred. [Subcode: 1] [Subcode: 3]	➔ Release the alarm. ➔ If you want to restart running the motor without treating this condition as an alarm, set F14 to “3,” “4,” or “5,” depending on the load type.
(2) The power to the inverter was switched back to ON too soon (when F14 = 1). [Subcode: 2]	Check if the power to the inverter was switched back to ON while the control power was still alive. Check whether the LEDs on the keypad are lit. ➔ Turn the power ON again after all LEDs on the keypad turn OFF.
(3) The power supply voltage did not reach the inverter's type correct range.	Measure the input voltage. ➔ Increase the voltage to within the specified range.
(4) Peripheral equipment for the power circuit malfunctioned, or the connection was incorrect.	Measure the input voltage to find which peripheral equipment malfunctioned or which connection is incorrect. ➔ Replace any faulty peripheral equipment, or correct any incorrect connections.
(5) Any other loads connected to the same power supply has required a large starting current, causing a temporary voltage drop.	Measure the input voltage and check the voltage fluctuation. ➔ Reconsider the power supply system configuration.
(6) Inverter's inrush current caused the power voltage drop because the power supply transformer capacity was insufficient.	Check if the alarm occurs when a molded case circuit breaker (MCCB), earth leakage circuit breaker (ELCB) (with overcurrent protection) or magnetic contactor (MC) is turned ON. ➔ Reconsider the capacity of the power supply transformer.

[28] nrb NTC thermistor wire disconnection

Phenomenon: A wire break was detected on the NTC thermistor detection circuit.

Possible cause	Check and measures
(1) The motor thermistor cable is broken.	Check whether the motor cable is broken. ➔ Replace the cable.
(2) The motor ambient temperature is low (-30 °C (-22 °F) or below).	Measure the surrounding temperature. ➔ Review the operating environment.
(3) The motor thermistor is damaged.	Measure the motor thermistor resistance. ➔ Replace the motor.

[29] OCn Instantaneous overcurrent

Phenomenon: The inverter momentary output current exceeded the overcurrent level.

OC1 Overcurrent occurred during acceleration.
OC2 Overcurrent occurred during deceleration.
OC3 Overcurrent occurred immediately after starting operation, or during running at constant speed.

Possible cause	Check and measures
(1) The inverter output lines were short-circuited.	Disconnect the wiring from the inverter output terminals (U, V and W) and measure the interphase resistance of the motor wiring. Check if the resistance is too low. ➔ Remove the short-circuited part (including replacement of the wires, relay terminals and motor). If overcurrent is displayed when the inverter is run with the wiring disconnected from the inverter output terminals (U, V, and W). ➔ The inverter may be faulty. Contact your Fuji Electric representative.
(2) Ground faults have occurred at the inverter output lines.	Disconnect the wiring from the output terminals (U, V, and W) and perform a Megger test. ➔ Remove the grounded parts (including replacement of the wires, relay terminals and motor). If overcurrent is displayed when the inverter is run with the wiring disconnected from the inverter output terminals (U, V, and W). ➔ The inverter may be faulty. Contact your Fuji Electric representative.
(3) Overload	Measure the motor current with a measuring device to trace the current trend. Then, use this data to judge if the trend is over the calculated load value for your system design. ➔ If the load is too heavy, reduce it or increase the inverter capacity.
	Trace the current trend and check if there are any sudden changes in the current. ➔ If there are any sudden changes, make the load fluctuation smaller or increase the inverter capacity. ➔ Enable instantaneous overcurrent limiting (H12 = 1).
(4) Excessive torque boost specified. The manual torque boost is set if F37* = 0, 1, 3, or 4.	Check whether decreasing the torque boost (F09*) decreases the output current but does not stall the motor. ➔ If no stall occurs, decrease the torque boost (F09*).
(5) The specified acceleration/ deceleration time was too short.	Check that the motor generates enough torque required during acceleration/deceleration. That torque is calculated from the moment of inertia of the load and the acceleration/deceleration times. ➔ Increase the acceleration/deceleration times (F07, F08, E10 through E15, and H56). ➔ Enable the current limiter (F43) and torque limiter (F40, F41, E16, and E17). ➔ Increase the inverter capacity.
(6) Built-in braking transistor short circuit detection activates: (FRN0003G2S-2G to FRN0288G2S-2G) (FRN0002G2■-4G to FRN0217G2■-4G)	Check whether the braking resistor connection terminals (P+, DB) have shorted. Check whether the resistance of the connected braking resistance is excessively low. ➔ Connect an appropriate braking resistor.
(7) Malfunction caused by noise.	Check if appropriate noise control measures have been implemented (e.g., correct grounding and routing of control and main circuit wires). ➔ Take noise countermeasures. For details, refer to Appendix A. ➔ Enable the retry function (H04). ➔ Connect a surge absorber to magnetic contactor's coils or other solenoids (if any) causing noise.

📖 The explanations for function codes with an asterisk (*) are limited to motor 1. If using motor 2 to 4, replace with the relevant function codes in Chapter 5 "Table 5.3-2 Function codes to be switched".

[30] OH1 Heat sink overheat

Phenomenon: Temperature around heat sink has risen abnormally.

Possible cause	Check and measures
(1) The surrounding temperature exceeded the inverter's mode limit.	Measure the surrounding temperature. ➔ Lower the temperature (e.g., ventilate the panel where the inverter is mounted).
(2) Ventilation paths are blocked.	Check if there is sufficient clearance around the inverter. ➔ Change the mounting place to ensure the clearance.
	Check if the fin is not clogged. ➔ Clean the fins.
(3) Cooling fan's airflow volume decreased due to the service life expired or failure.	Check the cumulative run time of the cooling fan. (See Chapter 3 “3.4.5 Reading maintenance information “Maintenance Information: 5.CHE”.) ➔ Replace the cooling fan.
	Measure the inverter output current. ➔ Replace the cooling fan.
(4) Overload	Measure the inverter output current. ➔ Reduce the load. Reduce the load before reaching an overload using cooling fin overheat forecast (E01-E05)/overload forecast (E34). ➔ Decrease the motor sound (Carrier frequency (F26)). ➔ Enable overload prevention control (H70).

[31] OH2 External alarm

Phenomenon: External alarm was inputted ***THR***.
(when the “Enable external alarm” signal ***THR*** has been assigned to any of digital input terminals)

Possible cause	Check and measures
(1) An alarm function of external equipment was activated.	Check the operation of external equipment. ➔ Remove the cause of the alarm that occurred.
(2) Wrong connection or poor contact in external alarm signal wiring.	Check if the external alarm signal wiring is correctly connected to the terminal to which the “external alarm” has been assigned (Any of E01 to E09, E98, and E99 should be set to “9.”). ➔ Connect the external alarm signal wire correctly.
(3) Incorrect setting of function code data.	Check whether an “external alarm” is assigned to a terminal not used yet among E01 to E09, E98, E99. ➔ Correct the assignment.
	Check whether the logic of ***THR*** set up at E01 to E09, E98, E99 agrees with that (positive/negative) of external signals. ➔ Set the logic correctly.

[32] OH3 Inverter internal overheat

Phenomenon: Temperature inside the inverter has exceeded the allowable limit.

Possible cause	Check and measures
(1) The surrounding temperature exceeded the inverter's mode limit. [Subcode: 0]	Measure the surrounding temperature. ➔ Lower the temperature around the inverter (e.g., ventilate the panel where the inverter is mounted).

[33] OH4 Motor protection (PTC/NTC thermistor)

Phenomenon: Temperature of the motor has risen abnormally.

Possible cause	Check and measures
(1) The temperature around the motor exceeded the motor's mode range.	Measure the surrounding temperature. ➔ Lower the temperature around the motor.
(2) Cooling system for the motor is defective.	Check if the cooling system of the motor is operating normally. ➔ Repair or replace the cooling system of the motor.
(3) Overload	Measure the inverter output current. ➔ Reduce the load (e.g., Use the overload early warning (E34) and reduce the load before the overload protection is activated.) In winter, the load tends to increase. ➔ Lower the temperature around the motor. ➔ Increase the Carrier frequency (function code F26).
(4) The activation level (H27*) of the PTC thermistor for motor overheat protection was set inadequately.	Check the PTC thermistor modes and recalculate the detection voltage. ➔ Modify the data of function code H27*.
(5) The setting of the PTC/NTC thermistor is not adequate.	Check thermistor Mode selection (H26*) and the select switches (SW5) of terminal [V2]. ➔ Set an appropriate value for H26* for the thermistor being used, and set SW5 to the PTC/NTC side.
(6) Excessive torque boost specified (F09*)	Check whether decreasing the torque boost (F09*) does not stall the motor. ➔ If no stall occurs, decrease the F09* data.
(7) The V/f pattern did not match the motor.	Check if the base frequency (F04*) and the rated voltage at base frequency (F05*) match the rated values on the motor's nameplate. ➔ Match the function code data with the values on the motor's nameplate.
(8) Incorrect setting of function code data.	Although PTC/NTC thermistor is not used, the thermistor Mode selection (H26*) is set to the operation state. ➔ Set the H26* data to “0” (Disable).

📖 The explanations for function codes with an asterisk (*) are limited to motor 1. If using motor 2 to 4, replace with the relevant function codes in Chapter 5 "Table 5.3-2 Function codes to be switched".

[34] OH6 Charging resistor overheat

Phenomenon: Temperature of the charging resistor inside the inverter has risen abnormally.

Possible cause	Check and measures
(1) The inverter power is turned ON and OFF frequently.	Suppress the inverter power ON/OFF cycles. ➔ Turn ON and OFF the inverter power once or less per 30 min.
(2) The inverter power is not turned ON and OFF frequently.	Check that this alarm always occurs when the inverter power is turned ON. ➔ The charging circuit of the inverter is faulty. Consult your Fuji Electric representative for repair.

[35] OLn Overload of motors 1 through 4

Phenomenon: Electronic thermal function for motor overload detection of motors 1-4 worked.

OL1 Motor 1 overload
OL2 Motor 2 overload
OL3 Motor 3 overload
OL4 Motor 4 overload

Possible cause	Check and measures
(1) The electronic thermal characteristics do not match the motor overload characteristics.	Check the motor characteristics. ➔ Review the data of related function codes P99*, F10*, F12*. ➔ Use an external thermal relay.
(2) Activation level for the electronic thermal protection was inadequate.	Check the continuous allowable current of the motor. ➔ Reconsider and change the data of function code F11*.
(3) The specified acceleration/ deceleration time was too short.	Recalculate the acceleration/deceleration torque and time needed for the load, based on the moment of inertia of the load and the acceleration/deceleration times. ➔ Increase the acceleration/deceleration times (F07, F08, E10 to E15, and H56).
(4) Overload	Measure the inverter output current. ➔ Reduce the load (e.g., Use the overload early warning (E34) and reduce the load before the overload protection is activated.) In winter, the load tends to increase.
(5) Excessive torque boost specified (F09*)	Check whether decreasing the torque boost (F09*) does not stall the motor. ➔ If no stall occurs, decrease the F09* data.

📖 The explanations for function codes with an asterisk (*) are limited to motor 1. If using motor 2 to 4, replace with the relevant function codes in Chapter 5 "Table 5.3-2 Function codes to be switched".

[36] OLU Inverter overload

Phenomenon: Temperature inside inverter has risen abnormally.

Possible cause	Check and measures
(1) The surrounding temperature exceeded the inverter's mode limit.	Measure the surrounding temperature. ➔ Lower the temperature (e.g., ventilate the panel where the inverter is mounted).
(2) Excessive torque boost specified (F09*)	Check whether decreasing the torque boost (F09*) does not stall the motor. ➔ If no stall occurs, decrease the F09* data.
(3) The specified acceleration/ deceleration time was too short.	Recalculate the acceleration/deceleration torque and time needed for the load, based on the moment of inertia of the load and the acceleration/deceleration times. ➔ Increase the acceleration/deceleration times (F07, F08, E10 to E15, and H56).
(4) Overload	Measure the inverter output current. ➔ Reduce the load (e.g. Use the overload early warning (E34) and reduce the load before the overload protection is activated.) In winter, the load tends to increase. ➔ Decrease the Carrier frequency (function code F26). ➔ Enable overload prevention control (H70).。
(5) Ventilation paths are blocked.	Check if there is sufficient clearance around the inverter. ➔ Change the mounting place to ensure the clearance.
	Check if the fin is not clogged. ➔ Clean the fins.
(6) Cooling fan's airflow volume decreased due to the service life expired or failure.	Check the cumulative run time of the cooling fan. (See Chapter 3 “3.4.5 Reading maintenance information “Maintenance Information: S.CHE”.) ➔ Replace the cooling fan.
	Visually check that the cooling fan rotates normally. ➔ Replace the cooling fan.
(7) The wires to the motor are too long, causing a large leakage current from them.	Measure the leakage current. ➔ Insert an output circuit filter (OFL).

📖 The explanations for function codes with an asterisk (*) are limited to motor 1. If using motor 2 to 4, replace with the relevant function codes in Chapter 5 "Table 5.3-2 Function codes to be switched".

[37] OPL Output phase loss

Phenomenon: Output phase loss occurred.

Possible cause	Check and measures
(1) Inverter output wires are broken.	Measure the inverter output current. ➔ Replace the output wires.
(2) The motor winding is broken.	Measure the inverter output current. ➔ Replace the motor.
(3) The terminal screws for inverter output were not tight enough.	Check if any screws on the inverter output terminals have become loose. ➔ Tighten the terminal screws to the recommended torque.
(4) A single-phase motor has been connected.	➔ The inverter cannot be used. FRENIC-MEGA has been designed for driving three-phase induction motors and synchronous motors.

[38] OS Overspeed

Phenomenon: Motor rotated at excessive speed (When motor speed ≥ (F03 x 1.2))

Possible cause	Check and measures
(1) Incorrect setting of function code data.	Check the motor parameter “Number of poles” (P01*). ➔ Specify the P01* data in accordance with the motor to be used.
	Check the maximum frequency setting (F03*). ➔ Specify the F03* data in accordance with the output frequency.
	Check the speed limiting function (d32, d33) setting. ➔ Disable the speed limiting function (d32, d33).
	Check the overspeed detection level (d35) setting. ➔ Set the overspeed detection level (d35) to 120%.
(2) The speed regulator gain is insufficient.	Check whether the speed has overshot when performing high-speed operation. ➔ Increase the speed regulator gain (d03*). (Depending on the situation, it may be necessary to change the filters or adjust the integral time.)
(3) Noise is superimposed on the PG signal.	Check the PG signal input monitor, and check noise countermeasures (grounding condition, signal line/main circuit wiring installation method, etc.) ➔ Take noise countermeasures. For details, refer to Appendix A.
(4) The output frequency and motor rotation speed exceeded 599 Hz.	If running the motor near 599 Hz, check whether the acceleration time is too short, whether there are any load fluctuations. and whether the speed regulator gain (d03*) and integral time (d04*) are appropriate. ➔ Reduce the operating frequency.

📖 The explanations for function codes with an asterisk (*) are limited to motor 1. If using motor 2 to 4, replace with the relevant function codes in Chapter 5 "Table 5.3-2 Function codes to be switched".

[39] OUn Overvoltage

Phenomenon: The DC intermediate circuit voltage was over the detection level of overvoltage.

OU1 Overvoltage occurred during acceleration.
OU2 Overvoltage occurred during deceleration.
OU3 Overvoltage occurred during running at constant speed.

Possible cause	Check and measures
(1) The power supply voltage exceeded the inverter's mode range.	Measure the input voltage. ➔ Decrease the voltage to within the specified range. ➔ If the power supply voltage is within the specification range, the inverter may be faulty. Contact your Fuji Electric representative.
(2) A surge current entered the input power supply.	In the same power line, if a phase-advancing capacitor is turned ON/OFF or a thyristor converter is activated, a surge (momentary large increase in the voltage or current) may be caused in the input power. ➔ Install a DC reactor.
(3) The deceleration time was too short for the moment of inertia of the load.	Recalculate the deceleration torque based on the moment of inertia of the load and the deceleration time. ➔ Increase the deceleration time (F08, E11, E13, E15, and H56). ➔ Enable the anti-regenerative control (H69), or deceleration characteristics (H71). ➔ Set torque limit (F40, F41, E16, E17) to become effective. ➔ Set the rated voltage at base frequency (F05*) to “0” to improve the braking capability. ➔ Consider the use of a braking resistor.
(4) The acceleration time was too short.	Check if the overvoltage alarm occurs after rapid acceleration. ➔ Increase the acceleration time (F07, E10, E12, and E14). ➔ Select the Curve acceleration/ deceleration (H07). ➔ Consider the use of a braking resistor.
(5) Braking load is too heavy.	Compare the braking torque of the load with that of the inverter. ➔ Set the rated voltage at base frequency (F05*) to “0” to improve the braking capability. ➔ Consider the use of a braking resistor.
(6) A ground fault occurred at the output side.	If the motor runs normally with the wiring disconnected from the inverter output terminals (U, V, W). ➔ Check whether a ground fault has occurred at the output wiring or motor. If overvoltage is displayed when the inverter is run with the wiring disconnected from the inverter output terminals (U, V, and W). ➔ The inverter may be faulty. Contact your Fuji Electric representative.
(7) Malfunction caused by noise.	Check if the DC intermediate circuit voltage was below the protective level when the overvoltage alarm occurred. ➔ Take noise countermeasures. For details, refer to Appendix A. ➔ Enable the retry function (H04). ➔ Connect a surge absorber to magnetic contactor's coils or other solenoids (if any) causing noise.

📖 The explanations for function codes with an asterisk (*) are limited to motor 1. If using motor 2 to 4, replace with the relevant function codes in Chapter 5 "Table 5.3-2 Function codes to be switched".

[40] PbF Charge circuit fault (FRN0008G2S-2G/FRN0004G2□-4G or above)

Phenomenon: The magnetic contactor for short-circuiting the charging resistor failed to work.

Possible cause	Check and measures
(1) The charging circuit is faulty.	Inverter repair is necessary. ➔ Contact your Fuji Electric representative.

[41] PG PG wire disconnection

Phenomenon: The pulse generator (PG) wire has been broken somewhere in the circuit.

Possible cause	Check and measures
(1) PG(Z phase) wire break under master-follower operation.	Check whether the pulse generator (PG) is correctly connected to the option card or any wire is broken. ➔ Check whether the PG is connected correctly. Or, tighten the related terminal screws. ➔ Check whether the coating is trapped in the connecting part. ➔ Replace the wire(s).
(2) The inverter was affected by strong electrical noise.	Check noise countermeasures (grounding condition, signal line and communication cable/main circuit wiring installation method, etc.) ➔ Take noise countermeasures. ➔ Keep the main circuit wiring and control circuit wiring as far apart as possible.

[42] dO Excessive positioning deviation

Phenomenon: The position deviation during position control was excessive.

Possible cause	Check and measures
(1) Encoder wire break	Check whether an encoder wire break has occurred.
(2) Encoder rotation direction (wiring phase sequence), motor rotation direction (inverter output wiring phase sequence) mismatch	Connect and set so that all directions match. Review the setting values for d14 to d17 and H190.
(3) The deviation overflow setting value is too small.	Review the setting values for d223 and d224. Increase the setting value if too small.
(4) The position control gain is too small.	Review the setting values for d203 and d204. Increase the setting value if too small.
(5) The speed control gain is too small.	Review the setting values for d03 (A45, b45, r45). Increase the setting value if too small.
(6) Torque limiting has been applied.	If torque limiting is triggered, it will not be possible to perform position control or speed control correctly. Take the following countermeasures to prevent torque limiting being applied. · Reduce the load. · Review the acceleration/deceleration time. · Review the machine configuration such as the reduction ratio and motor capacity to reduce the load.

[43] Fod forced operation (Fire Mode)

Phenomenon: Displayed in the alarm history when forced operation (Fire Mode) is performed. Operation continues without a trip occurring even if another alarm occurs during forced operation.

Possible cause	Check and measures
(1) The “FMS” forced operation command was turned ON.	If the operation is unintended, turn OFF the “FMS” forced operation command, or change function code H116 to “0”.

Refer to “H116 to H121” in Chapter 5 “H codes (High-level functions)” for details on forced operation settings and operation, and to “■ Forced operation “FMS” assignment” in Chapter 5 “E codes (Terminal functions)” for details on “FMS” forced operation command assignment.

[44] FoL Filter clogging error

Phenomenon: An overload condition was detected during PID control.

Possible cause	Check and measures
(1) The filter for the fan being driven by the inverter is clogged with dust.	Check whether the fan filter is clogged with dust. ➔ Check whether the filter is clogged with dust. ➔ Clean or replace the filter.
(2) A failure occurred due such reasons as the life expectancy of the fan driven by the inverter being reached.	Check the fan parts. ➔ Check whether an abnormal noise is being emitted by the fan. ➔ Check whether the fan bearing has overheated.
(3) The function code setting is inappropriate.	Check whether the filter clogging (load resistor current) (J190) setting is too low. ➔ Check the set current value.
	Check whether the filter clogging (load resistor PV signal) (J191) setting is too low. ➔ Check the set feedback value.

[45] PUn PID control feedback error

Phenomenon: The PID feedback signal line is damaged.

PU1 PID control 1 feedback error
PU2 PID control 2 feedback error

Possible cause	Check and measures
(1) The PID feedback signal line wiring is damaged.	Check whether the PID feedback signal line has been connected correctly. ➔ Check whether PID feedback signal line has been connected correctly. Or retighten the screws. ➔ Check whether the coating is trapped in the connecting part.
(2) Affected by strong ambient noise.	Check noise countermeasures (grounding condition, signal line and communication cable/main circuit wiring installation method, etc.) ➔ Enhance noise countermeasures. ➔ Keep the main circuit wiring and control circuit wiring as far apart as possible.
(3) The function code setting is inappropriate.	The PID control feedback error upper limit (J129, J229) settings are too high. ➔ Review the set feedback values.
	The PID control feedback error lower limit (J130, J230) settings are too low. ➔ Review the set feedback values.

[46] PUn External PID feedback error

Phenomenon: The PID feedback signal line is damaged.

PUA External PID control 1 feedback error
PUb External PID control 2 feedback error
PUC External PID control 3 feedback error

Possible cause	Check and measures
(1) The PID feedback signal line wiring is damaged.	Check whether the PID feedback signal line has been connected correctly. ➔ Check whether PID feedback signal line has been connected correctly. Or retighten the screws. ➔ Check whether the coating is trapped in the connecting part.
(2) Affected by strong ambient noise.	Check noise countermeasures (grounding condition, signal line and communication cable/main circuit wiring installation method, etc.) ➔ Enhance noise countermeasures. ➔ Keep the main circuit wiring and control circuit wiring as far apart as possible.
(3) The function code setting is inappropriate.	The external PID control feedback error upper limit (J529, J629, J679) settings are too high. ➔ Review the set feedback values.
	The external PID control feedback error lower limit (J530, J630, J680) settings are too low. ➔ Review the set feedback values.

[47] Pdr Drought protection

Phenomenon: A water shortage condition was detected during PID control.

Possible cause	Check and measures
(1) The water tank water level has dropped to the water shortage position.	Check whether the water tank has been sufficiently filled. ➔ Check whether the water tank has been filled with the correct amount of water. ➔ Check whether the motor-operated valve is closed.
(2) Water is leaking from the pipes or pump system.	Check for any water leaks from the pipes or pump system. ➔ Check whether water is leaking from the pump itself. ➔ Check for any cracks in the pipes, etc., and whether any water is leaking from the connections between pipes. Tighten the pipe connections further.
(3) The function code setting is inappropriate.	Check whether the water shortage protection (detection current) (J177, J277) settings are too high. ➔ Review the set current values.
	Check whether the water shortage protection (deviation) (J178, J278) settings are too low. ➔ Review the set deviation amount.
(4) The function code setting for the flow sensor is inappropriate. (only if water shortage protection (flow sensor) (J179, J279) set to “1: Run”)	No flow switch/sensor has been assigned to digital or analog input. ➔ If inputting flow switch signals from digital input, assign “131: Flow switch “FS”” to function codes E01 to E09, E98 and E99. ➔ If inputting flow sensor signals from analog input, assign “33: Flow sensor” to function codes E61 to E63.
	If flow switch signals are being input from digital input, ensure that the “FS” logic and external signal logic (positive and negative) set at function codes E01 to E09, and E98 and E99 match. ➔ Set the logic correctly.
	If inputting flow sensor signals from analog input, the flow sensor OFF level (J165) setting is too high. ➔ Review the set OFF level value.
(5) The flow sensor signal line wiring is damaged.	Check whether the flow sensor signal line has been connected correctly. ➔ Check whether the flow sensor signal line has been connected correctly. Or retighten the screws. ➔ Check whether the coating is trapped in the connecting part.

[48] PoL End of curve protection (PID control 1)

Phenomenon: Large water volume was detected during PID control.

Possible cause	Check and measures
(1) The PID feedback signal line wiring is damaged.	Check whether the PID feedback signal line has been connected correctly. ➔ Check whether PID feedback signal line has been connected correctly. Or retighten the screws. ➔ Check whether the coating is trapped in the connecting part.
(2) There is insufficient pump capacity or an insufficient number of pumps.	Check whether the necessary amount of water is being supplied correctly. ➔ Increase the number of pumps. ➔ Increase the pump capacity.
(3) The function code setting is inappropriate.	Check whether the large water volume protection (detection current) (J183) setting is too low. ➔ Review the set current value.
	Check whether the large water volume protection (deviation) (J184) setting is too low. ➔ Review the set deviation amount.
(4) The function code setting for the flow sensor is inappropriate. (only if water shortage protection (flow sensor) (J179, J279) set to “1: Run”)	If flow switch signals are being input from digital input, ensure that “FS” logic and external signal logic (positive and negative) set at function codes E01 to E09, and E98 and E99 match. ➔ Set the logic correctly.
	If inputting flow sensor signals from analog input, the flow sensor ON level (J164) setting is too high. ➔ Review the set ON level value.

[49] rLo Anti jam (PID control 1)

Phenomenon: Foreign matter became trapped in the pump impeller, resulting in overcurrent.

Possible cause	Check and measures
(1) Foreign matter became trapped in the pump impeller.	Check for any foreign matter in the water tank or well at the pump suction side. ➔ Check for any foreign matter inside the pump. ➔ Remove any foreign matter from the water tank or well as best as possible.
(2) A failure occurred due such reasons as the life expectancy of the pump being reached.	Check the pump parts. ➔ Check whether an abnormal noise is being emitted by the pump. ➔ Check whether the pump bearings have overheated.

[50] roC Control of maximum starts per hour (PID control 1)

Phenomenon: PID control low liquid level stop operation occurred frequently.

Possible cause	Check and measures
(1) PID feedback signal line wiring contact defect	Check whether the PID feedback signal line has been connected correctly. ➔ Check whether PID feedback signal line has been connected correctly. Or retighten the screws. ➔ Check whether the coating is trapped in the connecting part.
(2) A failure occurred due such reasons as the life expectancy of the accumulator (accumulator tank) being reached.	Check the accumulator parts. ➔ Replace the accumulator.

6.4 If a Warning Code is Displayed

6.4.1 Warning code list

It is possible to display a warning cause code while the inverter continues to run, and output a warning signal from the Y terminal. To display the warning, select with function codes H81, H82, or H83. (See Chapter 5 “FUNCTION CODES”.)

If outputting warning signals from the Y terminal, set 98 ***L-ALM*** for the function codes corresponding to E20 to E24.

Table 6.4-1 Warning code list

Warning code	Warning name	Mode selection Function code	Setting method	Ref. page
CnF	Machine life (Number of startups)	H82 Bit 13	Refer to Chapter 5 “FUNCTION CODES” - “5.3.5 H codes (High performance functions)”.	-
iGb	IGBT lifetime alarm	H83 Bit 13		
LiF	Lifetime alarm	H82 Bit 7		
OH	Heat sink overheat early warning	H82 Bit 6		
OL	Motor overload early warning	H82 Bit 5		
Pid	PID alarm	H82 Bit 9		
PTC	PTC thermistor activated	H82 Bit 11		
rAF	Cooling capability drop	H83 Bit 14		
rEF	Reference command loss detected	H82 Bit 8		
rTE	Machine life (Cumulative motor running hours)	H82 Bit 12		
UTL	Low torque detection	H82 Bit 10		
Lob	Low battery warning	H82 Bit 15		
PA1 PA2 *1	PID control 1, 2 warning output	H83 Bit 8,9	Refer to Chapter 5 “FUNCTION CODES” - “5.3.10 J1 codes (Applied functions)”.	
PAA PAb PAC *1	External PID control 1, 2, 3 warning output	H83 Bit 10		
SLA *1	Slave alarm	-		

*1 Supported with ROM0500 or later.

6.4.2 Warning cause and check

[1] CnT Machine life (Number of startups)

Possible cause	Check and measures
(1) Inverter life (Number of startups)	This is displayed when the number of times that the motor is started reaches the number of times set with function code H79 (maintenance setting startup count). Furthermore, the current startup count can be checked at function code H44 (startup count), and therefore the H44 data should be set to “0000” to reset the count.

[2] iGb IGBT lifetime alarm

Possible cause	Check and measures
(1) IGBT power cycle life	The element temperature power cycle life for the main circuit semiconductor IGBT due to frequent acceleration and deceleration stoppages is estimated, and this is displayed before the design life is reached.

[3] L iF Lifetime alarm

Possible cause	Check and measures
(1) Lifetime alarm	It is judged that the service life of any one of the capacitors (DC link bus capacitors or electrolytic capacitors on PCBs), the cooling fan, or the IGBT has expired. (Refer to “7.4.1 Judgment on service life” in Chapter 7, and check the part service life status in the keypad maintenance information.)

[4] OH Heat sink overheat early warning

Possible cause	Check and measures
(1) Cooling fin overheat early warning	This is displayed as a warning before cooling fin overheating trip OH1 occurs. Refer to “[30] OH1 Cooling fin overheat” for details on countermeasures.

[5] OL Motor overload early warning

Possible cause	Check and measures
(1) Motor overload early warning	This is displayed as a warning before the motor overload OL1 alarm occurs. Set the current at which this is triggered at overload warning operation level (E34). Check whether the actual motor current is greater than the current set at E34.

[6] P id PID alarm

Possible cause	Check and measures
(1) PID alarm output	This is displayed if a PID control warning (absolute value warning, deviation warning) occurs. Refer to Chapter 5 "FUNCTION CODES " - "5.3.9 J Codes (Applied functions)" (J11 to J13 PID Control (Select warning output)).

[7] PtC PTC thermistor activated

Possible cause	Check and measures
(1) Thermistor detection (PTC)	This warning is displayed when the temperature detected with the motor PTC thermistor exceeds the operation level (H27) threshold value. Refer to "[33] OH4 Motor protection (PTC thermistor)" for details on countermeasures.

[8] rAF Cooling capability drop

Possible cause	Check and measures
(1) Cooling capability drop	Drops in cooling capability due to the clogging of cooling fins with dust, etc., or drops in cooling fan air flow are detected and displayed. Clean the cooling fins or replace the cooling fan as necessary.

Note Depending on the usage conditions, cooling fin overheating protection OH1 may occur first. By using cooling fin overheating early warning OH, an overheating early warning can be detected before cooling fin overheating protection OH1 occurs.

[9] rEF Reference command loss detected

Possible cause	Check and measures
(1) Command loss	If the analog frequency setting (terminals [12], [C1], [V2]) command drops rapidly to 10% or lower, a wire break is determined, and "rEF" is displayed. Check the wiring.

[10] rIE Machine life (Cumulative motor running hours)

Possible cause	Check and measures
(1) Inverter life (Cumulative run time)	This is displayed when the motor cumulative running time reaches the time set with function code H78 (maintenance setting time). The motor cumulative running time can be checked at H94* (motor cumulative running time). Furthermore, the time can be reset by setting the H94* value to "0".

[11] UrL Low torque detection

Possible cause	Check and measures
(1) Low torque detection	This is displayed when the output torque drops to the low torque detection level (E80) or below, and persists for the timer (E81) time or longer.

[12] Lob Low battery warnig (for Multi-function Keypad (TP-A2SW))

Possible cause	Check and measures
(1) The TP-A2SW multi-function keypad (option) remaining battery capacity is insufficient.	· Check whether the trip history date and time information has been lost. · Refer to the TP-A2SW multi-function keypad instruction manual, and replace the battery (sold separately) and set the date and time information again.

[13] PA1, PA2 PID control 1, 2 warning output

Possible cause	Check and measures
(1) The deviation with the PID control 1, 2 feedback value absolute value or command value exceeded the setting value.	This is displayed if a PID control 1, 2 warning (absolute value warning, deviation warning) occurs. Refer to Chapter 5 FUNCTION CODES “5.3.9 J Codes (Applied functions)” (J121 to J124, J221 to J225 PID control (warning output selection)) for details.

[14] PAA, PAb, PAC External PID control 1, 2, 3 warning output

Possible cause	Check and measures
(1) The deviation with the external PID control 1, 2, 3 feedback value absolute value or command value exceeded the setting value. (2) The absolute value for the external PID control 1, 2, 3 PID command value or output value (control input) exceeded the setting value.	This is displayed if a PID control 1, 2 warning (absolute value warning, deviation warning) occurs. Refer to Chapter 5 FUNCTION CODES “5.3.13 J5 codes (Applied functions)” (J521 to J524, J621 to J624, J671 to J674 PID control (warning output selection)) for details.

[15] SLA Slave alarm

Possible cause	Check and measures
(1) An alarm occurred at the rotary operation slave side.	A minor fault is displayed in the master when some kind of alarm occurs at the rotary operation slave side. Check the content of the alarm occurring at the slave side, and reset the alarm after eliminating the cause.

6.5 Other Errors

6.5.1 Abnormal motor operation

[1] The motor does not rotate

Possible cause	Check and measures
(1) The main power supply is not being input correctly.	Check the input voltage and interphase voltage unbalance. ➔ Switch on the molded case circuit breaker, an earth-leakage circuit breaker (with overcurrent protective function) or a magnetic contactor. ➔ Check for voltage drop, phase loss, poor connections, or poor contacts, and fix them if necessary. ➔ If only the auxiliary control power input is supplied, also supply the main power to the inverter.
(2) No forward/reverse operation command was inputted, or both the commands were inputted simultaneously (external signal operation).	Check the input status of the forward/reverse command with Menu “I/O Checking” using the keypad. ➔ Input a run command. ➔ Set either the forward or reverse operation command to OFF. ➔ Correct the run command source. Set F02 data to “1.” ➔ Correct the assignment error of terminals [FWD], [REV]. (E98, E99) ➔ Connect the external circuit wires to control circuit terminals [FWD] and [REV] correctly. ➔ Make sure that the sink/source slide switch (SW1) on the control printed circuit board (control PCB) is properly configured.
(3) No rotational direction is instructed. (Keypad operation)	Check the forward/reverse rotation direction command with Menu “I/O Checking” using the keypad. ➔ Input the rotation direction (F02 = 0), or select the keypad operation with which the rotation direction is fixed (F02 = 2 or 3).
(4) The inverter could not accept any run commands from the keypad since it was in Programming mode.	Check which operation mode the inverter is in using the keypad. ➔ Shift the operation mode to Running mode and enter a run command.
(5) A run command with higher priority than the one attempted was active, and the run command was stopped.	Based on the run command block diagram (See Chapter 8), check a higher priority run command by function code data check and I/O checking from Menu using the keypad. ➔ Correct any incorrect function code data settings such as link function (Mode selection) (H30) and bus link function (Mode selection) (y98) or cancel the higher priority run command.
(6) No analog frequency command input.	Check that a reference frequency has been entered correctly, using Menu “I/O Checking” on the keypad. ➔ Connect external circuit wirings of terminals [13], [12], [11], [C1], and [V2] correctly. ➔ If using terminal [V2], check the terminal [V2] function select switch (SW5) select switch, and the thermistor (operation selection) (H26) setting.

Possible cause	Check and measures
(7) The reference frequency was below the starting or stop frequency.	Check that a reference frequency has been entered correctly, using Menu “I/O Checking” on the keypad. ➔ Set the reference frequency at the same or higher value than that of the starting and stop frequencies (F23* and F25*). ➔ Reconsider the starting and stop frequencies (F23* and F25*), and if necessary, change them to lower values. ➔ Inspect the external frequency command potentiometers, signal converters, switches, and relay contacts. Replace any ones that are faulty. ➔ Connect external circuit wirings of terminals [13], [12], [11], [C1], and [V2] correctly.
(8) A frequency command with higher priority than the one attempted was active.	Based on the frequency setting block diagram (See Chapter 8 “BLOCK DIAGRAMS FOR CONTROL LOGIC”), check the data by function code data check and I/O checking from Menu using the keypad. ➔ Correct any incorrect function code data (e.g. cancel the higher priority run command).
(9) The upper and lower frequencies for the frequency limiters were set incorrectly.	Check the data of function codes F15 (Frequency limiter (High)) and F16 (Frequency limiter (Low)). ➔ Change the settings of F15 and F16 to the correct ones.
(10) The coast-to-stop command was effective.	Check the data of the function codes (E01 to E09, E98, E99), and check the input state by using “I/O Checking” from the Menu on the keypad. ➔ Release the coast-to-stop command setting. idLE is displayed while the coast-to-stop command is being entered.
(11) Broken wires, incorrect connection or poor contact with the motor.	Check the wiring (Measure the output current). ➔ Repair the wires to the motor, or replace them.
(12) Overload	Measure the inverter output current. ➔ Reduce the load (In winter, the load tends to increase.)
	Check whether any mechanical brake is applied. ➔ Release the mechanical brake.
(13) Torque generated by the motor was insufficient.	Check that the motor starts running if the value of the torque boost (F09*) is increased. ➔ Increase the value of torque boost (F09*).
	Check the data of function codes (F04*, F05*, H50, H51, H52, H53, H65, and H66). ➔ Change the V/f pattern to match the motor's characteristics.
	Check that the motor switching signal (selecting motor 1 - 4) is correct and the data of function codes matches each motor. ➔ Correct the motor switching signal. ➔ Modify the function code data to match the connected motor.
	Check whether the reference frequency is below the slip frequency of the motor. ➔ Change the reference frequency so that it becomes higher than the slip frequency of the motor.
(14) Wrong connection or poor contact of DC reactor.	Check the wiring. If using motors with output of 75 kW or higher, be sure to use a DC reactor (option). ➔ Connect the DCR correctly. Repair or replace DCR wires.
(15) Simulated operation mode	Check whether the function code (H00) is 1 (simulated operation mode). ➔ Set the function code (H00) to 0 (normal running mode).

📖 The explanations for function codes with an asterisk (*) are limited to motor 1. If using motor 2 to 4, replace with the relevant function codes in Chapter 5 "Table 5.3-2 Function codes to be switched".

[2] The motor rotates, but the speed does not increase

Possible cause	Check and measures
(1) The maximum frequency currently specified was too low.	Check the data of function code F03* (Maximum output frequency 1). ➔ Correct the F03* data.
(2) The data of frequency limiter (Upper limit) currently specified was too low.	Check the data of function code F15 (Frequency limiter (Upper limit)). ➔ Correct the F15 data. The factory default is set to 70 Hz. If running the motor with maximum output frequency 1 (F03*) set to 70 Hz or higher, it will also be necessary to increase the F15 value.
(3) The reference frequency is too low.	Check that the reference frequency has been entered properly using Menu “I/O Checking” on the keypad. ➔ Increase the reference frequency. ➔ Inspect the external frequency command potentiometers, signal converters, switches, and relay contacts. Replace any ones that are faulty. ➔ Connect external circuit wirings of terminals [13], [12], [11], [C1], and [V2] correctly.
(4) A frequency command (e.g., multi-frequency or via communication) with higher priority than the one attempted was active and its reference frequency was too low.	Based on the frequency setting block diagram (See Chapter 8), check the function code data from the Menu using the keypad, and perform an I/O check to check the input frequency command. ➔ Correct any incorrect data of function codes (e.g. cancel the higher priority frequency command).
(5) The acceleration time was too long or too short.	Check the data of acceleration times (F07, E10, E12, E14). ➔ Change the acceleration time to match the load.
(6) Overload	Measure the inverter output current. ➔ Reduce the load.
	Check whether any mechanical brake is applied. ➔ Release the mechanical brake.
(7) Function code settings do not agree with the motor characteristics.	When automatic torque boost and automatic energy-saving operations are performed, confirm that P02*, P03*, P06*, P07*, P08* agree with motor constants. ➔ Perform auto-tuning of the inverter for every motor to be used.
(8) The output frequency does not increase due to the current limiter operation.	Make sure that F43 (Current limiter (Mode selection)) is set to “2” and check the data of F44 (Current limiter (Level)). ➔ Change the F44 data correctly. Or, set the F43 data to “0” (Disable) if the current limiter operation is not needed.
	Decrease the value of torque boost (F09*), then run the motor again and check if the speed increases. ➔ If no stall occurs, decrease the F09* data.
	Check the data of function codes (F04*, F05*, H50, H51, H52, H53, H65, and H66) to ensure that the V/f pattern setting is right. ➔ Match the V/f pattern setting with the motor ratings.
(9) The output frequency does not increase due to the torque limiter operation.	Check whether the data of torque control levels (F40, F41, E16, E17) are set to appropriate values. Also, check whether torque limit 2/1 switching signal [TL2/TL1] is correct. ➔ Correct the data of F40, F41, E16 and E17 or reset them to the factory defaults. ➔ Set the TL2/TL1 correctly.

(10) Bias and gain incorrectly specified.	Check the data of function codes (F18, C50, C32, C34, C37, C39, C42, and C44). ➔ Readjust the bias and gain to appropriate values.
(11) When performing vector control with speed sensor, the motor rotates slowly, and is unable to run at the specified speed.	Check whether the encoder wiring and rotation direction, and motor wiring and rotation direction match the function code settings. ➔ Wire the encoder and motor correctly, and set the correct rotation direction.

📖 The explanations for function codes with an asterisk (*) are limited to motor 1. If using motor 2 to 4, replace with the relevant function codes in Chapter 5 "Table 5.3-2 Function codes to be switched".

[3] The motor runs in the opposite direction to the command

Possible cause	Check and measures
(1) Wiring to the motor is incorrect.	Check the wiring to the motor. ➔ Connect terminals U, V, and W of the inverter to the U, V, and W terminals of the motor, respectively.
(2) Incorrect connection and settings for run commands and rotation direction commands (FWD and REV).	Check the data of function codes (E98 and E99) and the connection. ➔ Correct the data of the function codes and the connection.
(3) A run command (with fixed rotational direction) from the keypad is active, but the rotational direction setting is incorrect.	Check the data of function code F02 (Operation method). ➔ Change the data of function code F02 to “2: / Keypad operation (forward rotation)” or “3: / Keypad operation (Reverse rotation)”.
(4) The rotation direction mode of the motor is opposite to that of the inverter.	The rotation direction of IEC-compliant motors is opposite to that of non-compliant motors. ➔ Switch the ***FWD/REV*** signal setting.
(5) The function code data related to the speed command are incorrect.	Check the function code data. See Chapter 8 “BLOCK DIAGRAMS FOR CONTROL LOGIC.” ➔ Set correct data.

[4] Speed fluctuation or current oscillation (e.g., hunting) occurs during running at constant speed

Possible cause	Check and measures
(1) The frequency setting is fluctuating.	Check the signals for the frequency command with Menu “I/O Checking” using the keypad. ➔ Increase the filter constants (C33, C38, and C43) in the frequency settings.
(2) An external frequency command potentiometer is used for frequency setting.	Check that there is no noise in the control signal wires from external sources. ➔ Keep the main circuit wiring and control circuit wiring as far apart as possible. ➔ Use shielded or twisted wires for control signals.
	Check whether the external frequency command potentiometer is malfunctioning due to noise from the inverter. ➔ Connect a capacitor to the output terminal of the potentiometer or insert a ferrite core on the signal wire. (See Chapter 2.)
(3) Frequency switching or multi-frequency command was enabled.	Check whether the relay signal for switching the frequency command is chattering. ➔ If the relay contact is defective, replace the relay.
(4) The wiring length between the inverter and the motor is too long.	Check whether auto-torque boost, auto-energy saving operation, or dynamic torque vector control is enabled. ➔ Perform auto-tuning of the inverter for every motor to be used. ➔ Disable the automatic control systems by setting F37* to “1” (Constant torque load) and F42* to “0” (V/f control), then check that the motor vibration stops. ➔ Make the output wires as short as possible.
(5) The machinery is hunting due to vibration caused by low rigidity of the load. Or the current is irregularly oscillating due to special motor parameters.	After disabling all the automatic control systems such as auto torque boost, auto energy saving operation, overload prevention control, current limiter, torque limiter, anti-regenerative control, auto search for idling motor speed, slip compensation, dynamic torque vector control, droop control, overload stop function, speed control, online tuning, notch filter, and observer, check that the motor vibration disappears. ➔ Disable the functions causing the vibration. ➔ Readjust the output current fluctuation damping gain (H80*). ➔ Readjust the speed control system. (d01* to d06*)
	Check that the motor vibration is suppressed if you decrease the value of F26 (Motor sound (Carrier frequency)) or set F27 (Motor sound (Tone)) to “0.” ➔ Decrease the carrier frequency (F26) or set the tone to “0” (F27 = 0).

📖 The explanations for function codes with an asterisk (*) are limited to motor 1. If using motor 2 to 4, replace with the relevant function codes in Chapter 5 "Table 5.3-2 Function codes to be switched".

[5] Unpleasant noises are emitted from motor or noises fluctuate

Possible cause	Check and measures
(1) The specified carrier frequency is too low.	Check the data of motor operation noise (Carrier frequency) (F26) and motor operation noise (Tone) (F27). ➔ Increase the carrier frequency (F26). ➔ Correct the F27 data.
(2) Ambient temperature of inverter is high. (In the selection of carrier frequency automatic reduction function (H98))	Measure the temperature inside the panel where the inverter is mounted. ➔ If it is over 40 °C (104 °F), lower it by improving the ventilation. ➔ Reduce the load to lower the inverter temperature (for fans or pumps, decrease the frequency limiter upper limit (F15)). Note) By canceling H98, alarm OH1, OH3, or OLU may occur.
(3) Resonance with the load.	Check the machinery mounting accuracy or check whether there is resonance with the mounting base. ➔ Sort out the resonance cause by running the motor independently. ➔ Avoid continuous running at the frequency range where the resonance occurs by setting the jump frequency (C01-C04) ➔ Set speed control (notch filter) (d07*, d08*) and observer (d18, d19, d20) to suppress vibrations. (Depending on the load characteristics, this may not be effective.)

📖 The explanations for function codes with an asterisk (*) are limited to motor 1. If using motor 2 to 4, replace with the relevant function codes in Chapter 5 "Table 5.3-2 Function codes to be switched".

[6] Motor is not accelerated or decelerated according to set-up acceleration or deceleration times

Possible cause	Check and measures
(1) The inverter runs the motor with S-curve or curvilinear pattern.	Check the data of function code H07 (Curve acceleration/ deceleration). ➔ Set linear acceleration/deceleration. (H07=0) ➔ Shorten the acceleration/deceleration times (F07, F08, E10 through E15).
(2) The current limiting operation prevented the output frequency from increasing (during acceleration).	Make sure that F43 (Current limiter (Mode selection)) is set to 2, then check that the setting of F44 (Current limiter (Level)) is reasonable. ➔ Readjust the setting of F44 to appropriate value, or disable the function of current limiter with F43. ➔ Increase the acceleration/deceleration times (F07, F08, E10 through E15).
(3) The anti-regenerative control is enabled (during deceleration).	Check the data of function code H69 (Anti-regenerative control (Mode selection)). ➔ Increase the deceleration time (F08, E11, E13, and E15).
(4) Overload	Measure the inverter output current. ➔ Reduce the load. For fans or pumps, decrease the frequency limiter Upper limit (F15). In winter, the load tends to increase. In winter, the load tends to increase.
(5) Torque generated by the motor was insufficient.	Check that the motor starts running if the value of the torque boost (F09*) is increased. ➔ Increase the value of the torque boost (F09*).
(6) An external frequency command potentiometer is used for frequency setting.	Check that there is no noise in the control signal wires from external sources. ➔ Keep the main circuit wiring and control circuit wiring as far apart as possible. ➔ Use shielded or twisted wires for control signals. ➔ Connect a capacitor to the output terminal of the potentiometer or insert a ferrite core on the signal wire. (See Chapter 2.)
(7) The output frequency is limited by the torque limiter.	Check whether the data of torque control levels (F40, F41, E16, E17) are set to appropriate values. Also, check whether torque limit 2/1 switching signal ***TL2/TL1*** is correct. ➔ Correct the data of F40, F41, E16 and E17 or reset them to the factory defaults. ➔ Set the ***TL2/TL1*** correctly. ➔ Increase the acceleration/deceleration times (F07, F08, E10 through E15).
(8) The specified acceleration or deceleration time was incorrect.	Check the terminal commands ***RT1*** and ***RT2*** for acceleration/ deceleration times. ➔ Correct the ***RT1*** and ***RT2*** settings.

📖 The explanations for function codes with an asterisk (*) are limited to motor 1. If using motor 2 to 4, replace with the relevant function codes in Chapter 5 "Table 5.3-2 Function codes to be switched".

[7] The motor does not restart even after the power recovers from a momentary power failure

Possible cause	Check and measures
(1) The data of function code F14 is either “0,” “1,” or “2.”	Check if an undervoltage trip LU occurs. ➔ Change the data of function code F14 (Restart mode after momentary power failure (Mode selection)) to “3,” “4,” or “5.”
(2) The run command remains OFF even after the power has been restored.	Check the input status with Menu “I/O Checking” using the keypad. (See Chapter 3 “3.4.4 Checking I/O signal status “I/O Checking: 4. I_O””.) ➔ Check the power recovery sequence with an external circuit. If necessary, consider the use of a relay that can keep the run command ON.
	In a 3-wire operation, momentary power failure duration is long so that control circuit power source of inverter is shut off once. Therefore, “select 3-wire operation” signal ***HLD*** is switched OFF once. ➔ Change the design or the setting so that a run command can be issued again within 2 seconds after the power has been restored.

[8] Motor generates heat abnormally

Possible cause	Check and measures
(1) Excessive torque boost specified.	Check whether decreasing the torque boost (F09*) decreases the output current but does not stall the motor. ➔ If no stall occurs, decrease the torque boost (F09*).
(2) Continuous running in extremely slow speed.	Check the running speed of the inverter. ➔ Change the speed setting or replace the motor with a motor exclusively designed for inverters.
(3) Overload	Measure the inverter output current. ➔ Reduce the load. In the case of fans/pumps, lower the setting value of F15 (Frequency limiter (Upper limit)). In winter, the load tends to increase.

📖 The explanations for function codes with an asterisk (*) are limited to motor 1. If using motor 2 to 4, replace with the relevant function codes in Chapter 5 "Table 5.3-2 Function codes to be switched".

[9] The motor does not run as expected

Possible cause	Check and measures
(1) Incorrect setting of function code data.	Check that function codes are correctly configured and no unnecessary configuration has been done. ➔ Configure all the function codes correctly.
	Make a note of function code data currently configured and then initialize all function code data using H03. ➔ After the above process, reconfigure function codes one by one, checking the running status of the motor.
(2) The forced operation function (Fire Mode) is being used.	Check that function codes are correctly configured and no unnecessary configuration has been done. ➔ Check the operation selection (H116) setting for forced operation. ➔ Check digital input terminal forced operation command “FMS”.

[10] Motor stalls during acceleration

Possible cause	Check and measures
(1) The acceleration time was too short.	Check the data of acceleration time (F07, E10, E12, E14, H57, H58). ➔ Extend the acceleration time.
(2) Moment of inertia of load is large.	Measure the inverter output current. ➔ Reduce the moment of inertia of the load. ➔ Increase the inverter capacity.
(3) Voltage drop of wiring is large.	Check the terminal voltage of motor. ➔ Increase the diameter or shorten the distance of wirings between the inverter and motor.
(4) Load torque of load is large.	Measure the inverter output current. ➔ Reduce the load torque of load. ➔ Increase the inverter capacity.
(5) Torque generated by the motor was insufficient.	Check whether the motor starts when torque boost (F09*, F37*, H51) is increased. ➔ Increase F09, F37, and H51.

📖 The explanations for function codes with an asterisk (*) are limited to motor 1. If using motor 2 to 4, replace with the relevant function codes in Chapter 5 "Table 5.3-2 Function codes to be switched".

6.5.2 Problems with inverter settings

[1] Nothing appears on the keypad

Possible cause	Check and measures
(1) No power (neither main power nor auxiliary control power) is supplied to the inverter.	Check the input voltage and interphase voltage unbalance. ➔ Switch on the molded case circuit breaker, an earth-leakage circuit breaker (with overcurrent protective function) or a magnetic contactor. ➔ Check for voltage drop, phase loss, poor connections, or poor contacts and fix them if necessary.
(2) The power for the control PCB did not reach a sufficiently high level.	Check if the shorting bar has been removed between terminals P1 and P(+) or if there is a poor contact between the shorting bar and those terminals. ➔ Mount a shorting bar or a DC reactor between terminals P1 and P(+). In case of poor contact, tighten the screws.
(3) The keypad was not properly connected to the inverter.	Check whether the keypad is properly connected to the inverter. ➔ Remove and then reattach the keypad. ➔ Replace the keypad with another one and check whether the problem recurs.
	When running the inverter remotely, ensure that the extension cable is securely connected both to the keypad and to the inverter. ➔ Disconnect the cable, reconnect it, and see whether the problem recurs. ➔ Replace the keypad with another one and check whether the problem recurs.

[2] The desired menu is not displayed

Possible cause	Check and measures
(1) The menu display mode is not selected appropriately.	Check the data of function code E52 (keypad (Menu display mode)). ➔ Change the E52 data so that the desired menu appears.

[3] Display of under bars (_ _ _ _ _)

Phenomenon: Although FWD key, run forward command ***FWD***, or REV key, run reverse command ***REV***, was pressed, the motor did not rotate and under bars were displayed.

Possible cause	Check and measures
(1) The voltage of the DC intermediate circuit was low.	Select 5_01 from menu item 5 "Maintenance Information" in keypad program mode. (Three-phase 200 V: 200 VDC or less, three-phase 400 V: 400 VDC or less) ➔ Connect the inverter to a power supply that meets its voltage supply range.
(2) The main power is not ON, while the auxiliary input power to the control circuit is supplied.	Check whether the main power is turned ON. ➔ Turn on the main power. Check if the shorting bar has been removed between terminals P1 and P(+) or if there is a poor contact between the shorting bar and those terminals. ➔ Mount a shorting bar or a DC reactor between terminals P1 and P(+). In case of poor contact, tighten the screws.
(3) AC power source is not connected due to the connection of DC power supply, but the detection of main power interruption is activated (H72=1).	Check the connection to the main power and check if the H72 data is set to “1” (factory default). ➔ Review the data of H72.
(4) Breaks in wiring to the main power input terminals.	Measure the input voltage. ➔ Repair or replace the main circuit power input wires or input devices (MCCB, MC, etc.).

[4] Display of center bars (- - - - -)

Phenomenon: A center bar (- - - - -) appeared on the LED monitor.

Possible cause	Check and measures
(1) When PID control had been disabled (J01 = 0), E43 (LED Monitor (Item selection)) is set to 10 or 12. PID control has been disabled (J01 = 0) when the LED monitor had been set to display the PID command or PID feedback amount by pressing the FUNC/DATA key.	Make sure that when you wish to view other monitor items, E43 is not set to “10: PID command” or “12: PID feedback value.” ➔ Set E43 to a value other than “10” or “12.” Make sure that when you wish to view a PID command or a PID feedback value, J01 (PID control) is not set to “0: Disable.” ➔ Set J01 to “1: Enable (Process control normal operation),” “2: Enable (Process control inverse operation),” or “3: Enable (Dancer control).”
(2) The keypad was poorly connected.	Prior check: Even when FUNC/DATA key is pressed, the display is not switched. Check continuity of the extension cable used in remote operation. ➔ Replace the cable.

[5] [ ] Display of parenthesis

Phenomenon: [ ] was displayed during speed monitoring by keypad.

Possible cause	Check and measures
(1) The display data overflows the LED monitor.	Check whether the product of the output frequency and the display coefficient (E50) exceeds 99,999. ➔ Review the data of E50.

[6] Data of function codes cannot be changed

Possible cause	Check and measures
(1) An attempt was made to change function code data that cannot be changed when the inverter is running.	Check if the inverter is running with Menu “Drive Monitoring” using the keypad and then confirm whether the data of the function codes can be changed when the motor is running by referring to the function code tables. ➔ Stop operation, and then change the function code data.
(2) The data of the function codes is protected.	Check the data of function code F00 (Data protection). ➔ Change the data of F00 from a data protection state (F00=1 or 3) to a data changeable state (F00=0 or 2).
(3) The WE-KP terminal command (“Enable data change with keypad”) is not entered, though it has been assigned to a digital input terminal.	Check the data of the function codes (E01 to E09, E98, E99), and check the input state by using “I/O Checking” from the Menu on the keypad. ➔ Input a WE-KP command through a digital input terminal.
(4) The FUNC/DATA key was not pressed.	Check whether the FUNC/DATA key was pressed after changing the function code data. ➔ Press the FUNC/DATA key after changing data. Ensure that “SAUE” is displayed.
(5) The data of the function codes F02, E01-E05, E98, E99 are not changeable.	Either one of the ***FWD*** and ***REV*** terminal commands is turned ON. ➔ Turn OFF both ***FWD*** and ***REV***.
(6) The function code(s) to be changed does not appear.	Only the function codes registered in favorites (0.Fnc) appear. ➔ Call the menu of 1.F_ _ to 1.P_ _ by pressing ▲ key from the favorites (0.Fnc) state on the Menu to display the intended function code and to change the value. (See Chapter 3, section 3.4 “Table 3.4-1 Menus available in programming mode” for details.)

[7] Function code data are not changeable (change from link functions)

Possible cause	Check and measures
(1) An attempt was made to change function code data that cannot be changed when the inverter is running.	Check if the inverter is running with Menu “Drive Monitoring” using the keypad and then confirm whether the data of the function codes can be changed when the motor is running by referring to the function code tables. ➔ Stop operation, and then change the function code data.
(2) The data of the function code F02 is not changeable.	Either one of the ***FWD*** and ***REV*** terminal commands is turned ON. ➔ Turn OFF both ***FWD*** and ***REV***.

[8] En.OFF appears

Phenomenon: Even when keys and ***FWD/REV*** signals are input, the motor did not rotate, and En.OFF was displayed.

Possible cause	Check and measures
(1) EN terminals are OFF.	Check whether terminals [EN1] and [EN2] are ON. ➔ Turn those terminals ON. (1) When the EN terminal function is not used: Check whether the 2 poles on the SW7 switch on the control board are both ON (factory default). (2) To enable the EN terminal function: Check whether the safety relay EMERGENCY STOP button is open (OFF) (turn terminals [EN1] and [EN2] ON). ➔ When the ***FWD/REV*** signals are ON, turn them OFF and then ON again. En.OFF will disappear, and the inverter will be ready to run.

[9] Other status display

Refer to “3.3.2 Status display” in Chapter 3 for details on other status codes which display the inverter running and operation status.

Chapter 7
MAINTENANCE AND INSPECTION

This chapter describes the maintenance and inspection items of the inverter.

Contents

7.1 Inspection Interval ····· 7-2
7.2 Daily Inspection ····· 7-3
7.3 Periodic Inspection ····· 7-4
7.3.1 Periodic inspection 1--Before the inverter is powered ON or after it stops running ····· 7-4
7.3.2 Periodic inspection 2--When the inverter is ON or it is running ····· 7-6
7.4 List of Periodic Replacement Parts ····· 7-7
7.4.1 Judgment on service life ····· 7-8
[1] Measuring the capacitance of DC link bus capacitor in comparison with initial value at time of shipment ····· 7-10
[2] Measuring the capacitance of the DC link bus capacitor under ordinary operating conditions ····· 7-11
[3] Early warning of lifetime alarm ····· 7-11
7.5 Measuring the Amount of Electricity in Main Circuit ····· 7-12
7.6 Insulation Test ····· 7-13
7.6.1 Megger test of main circuit ····· 7-13
7.6.2 Insulation test of control circuit ····· 7-13
7.6.3 Insulation test of external main circuit and sequence control circuit ····· 7-13
7.7 Product Inquiries and Warranty ····· 7-14
7.7.1 Inquiry request ····· 7-14
7.7.2 Product warranty ····· 7-14
[1] Free of charge warranty period and warranty range ····· 7-14
[2] Exclusion of liability for loss of opportunity, etc. ····· 7-15
[3] Repair period after production stoppage, spare parts supply period (maintenance period) ····· 7-15
[4] Delivery conditions ····· 7-15
[5] Service description ····· 7-15
[6] Applicable scope of service ····· 7-15

Perform daily and periodic inspections to avoid trouble and keep reliable operation of the inverter for a long time. When performing inspections, follow the instructions given in this chapter.

⚠ WARNING ⚠

- Carry out inspection after waiting **5 minutes or longer for units of FRN0003 to 0115G2S-2G / FRN0002 to 0060G2□-4G, or 10 minutes or longer for units of FRN0146 to 0432G2S-2G / FRN0085 to 1480G2□-4G**. Furthermore, ensure that the LED monitor or charge lamp are OFF, and use a device such as a tester to ensure that the DC intermediate circuit voltage across main circuit terminals [P(+)] and [N(-)] has dropped to a safe level (+25 VDC or less).

  Failure to observe this could result in electric shock.
- Maintenance and inspection, and part replacement should only be carried out by the authorized personnel.
- Remove all metal objects (watches, rings, etc.) before beginning work.
- Be sure to use insulated tools.
- Never modify the product.

  Failure to observe this could result in electric shock or injury.

7.1 Inspection Interval

Table 7.1-1 lists the inspection intervals and check items as a guide.

Table 7.1-1 List of inspections

Inspection type	Inspection interval	Inspection details
Daily Inspection	Every day	See section 7.2 .
Periodic Inspection	Every year	See section 7.3 .
10 year inspection *1	Every 10 years	Replacement of cooling fans *2 Replacement of DC link bus capacitors and close checks

*1 The decennial inspection (except replacement of cooling fans) should be performed only by the persons who have finished the Fuji Electric training course.
Contact the sales agent where you purchased the product or your nearest Fuji Electric representative. (Excl. cooling fan replacement.)

*2 Refer to “7.4 List of Periodic Replacement Parts” for the number of years for standard replacement of cooling fans.

Note

The replacement intervals are based on the inverter’s service life estimated at an ambient temperature of 40°C at 100% (HHD specification inverters) or 80% (HND/HD/ND*102 specification inverters) of full load. In environments with an ambient temperature above 40°C or a large amount of dust or dirt, the replacement intervals may be shorter.

The standard replacement frequency is merely a guide, and the life expectancy indicated is not guaranteed. Refer to “7.4 List of Periodic Replacement Parts.”

*102 HD and ND specification inverters are supported with ROM0600 or later.

7.2 Daily Inspection

Visually inspect the inverter for operation errors from the outside without removing the covers when the inverter is running or the power is ON. Table 7.2-1 lists daily inspection items.

Table 7.2-1 Daily inspection list

Inspection location	Inspection item	Inspection method	Criteria
Ambient environment	1) Check the ambient temperature, humidity, vibrations, and atmosphere (presence of dust, gas, oil mist, water droplets, etc.) 2) Have any foreign objects such as tools or dangerous objects been left in the surrounding area?	1) Perform a visual inspection, and perform measurement with the respective measuring instruments. 2) Visual inspection	1) Chapter 1 “1.3.1 Operating environment” must be satisfied. 2) No tools or dangerous objects should have been left in the surrounding area.
External appearance, other	1) Check that the bolts securing the wires to the main circuit terminals and control circuit terminals are not loose (* Carry out inspection before turning ON the power.) 2) Are there any abnormalities such as signs of overheating or discoloration? 3) Are there any abnormal noises, abnormal vibrations, or abnormal odors, etc.?	1) Retighten (* Do so before turning ON the power.) 2) Visual inspection 3) Auditory, visual, and olfactory inspection	1) There should be no looseness. If loose, retighten the screws. 2), 3) There should be no abnormalities.
Cooling fans	Check for abnormal noise or excessive vibration when the cooling fans are in operation.	Auditory and visual inspections	There should be no abnormalities.
Keypad display	Check for alarm indication.	Visual inspection	If any alarm is displayed, refer to Chapter 6 “6.3. If an Alarm Code Appears on the LED Monitor”.
Performance	Is the unit performing as expected (does it satisfy standard specifications)?	Check the keypad monitor.	There should be no abnormalities in the output speed, current and voltage and other running data.

7.3 Periodic Inspection

7.3.1 Periodic inspection 1--Before the inverter is powered ON or after it stops running

Perform periodic inspection 1 according to the items listed in Table 7.3-1 Periodic inspection list 1. Before performing periodic inspection 1, shut down the power and then remove the front cover.

It takes time for the main circuit DC part smoothing capacitor to dissipate even after turning OFF the power. To eliminate any danger, wait until the LED monitor or charge lamp has turned OFF, and use a device such as a tester to ensure that the DC voltage has dropped to a safe level (25 VDC or less) before carrying out work.

Table 7.3-1 Periodic inspection list 1

Inspection location		Inspection item	Inspection method	Criteria
Structural parts such as frames, covers		1) Is there any bolt looseness (at secured parts)? 2) Is there any deformation or damage? 3) Is there any discoloration due to overheating? 4) Is there any staining or dust adhesion?	1) Retighten 2), 3), 4) Visual inspection	1), 2), 3), 4) There should be no abnormalities. (If any section is stained, clean it with a soft cloth.)
Main circuit	Common	1) Are there any loose or missing bolts? 2) Is there any device or insulating material deformation, cracking, damage, or overheating, or any discoloration due to degradation? 3) Is there any staining or dust adhesion?	1) Retighten 2), 3) Visual inspection	1), 2), 3) There should be no abnormalities. (If any section is stained, clean it with a soft cloth.)
	Conductors, wires	1) Is there any discoloration or distortion of conductors due to overheating? 2) Are there any wire coating tears, cracks, or discoloration?	1), 2) Visual inspection	1), 2) There should be no abnormalities.
	Terminal blocks	Is there any damage?	Visual inspection	There should be no abnormalities.
	Smoothing capacitors	1) Is there any electrolyte leakage, discoloration, cracks, or case expansion? 2) Is there any safety valve protrusion, and are there any smoothing capacitors with significant valve expansion?	1), 2) Visual inspection	1), 2) There should be no abnormalities.
	Breaking resistors	1) Is there an abnormal odor due to overheating, or insulating material cracks? 2) Are any resistors disconnected?	1) Olfactory and visual inspection 2) Check the wires visually, or disconnect either one of the wires and measure the conductivity with a tester.	1) There should be no abnormalities. 2) Within ±10 % of the resistance of the braking resistor

Inspection location		Inspection item	Inspection method	Criteria
Control circuit	PCBs	1) Check for loose screws and connectors. 2) Are there any abnormal odors or discoloration? 3) Are there any cracks, damage, deformation, or significant rust? 4) Is there any electrolyte leakage or signs of deformation in the capacitors?	1) Retighten 2) Olfactory and visual inspection 3), 4) Visual inspection * Judgment on service life using “Menu #5 Maintenance Information” in Chapter 3, Section 3.4.5.	1), 2), 3), 4) There should be no abnormalities.
Cooling system	Cooling fans	1) Check for catching or abnormal vibration. 2) Is there any bolt looseness? 3) Is there any discoloration due to overheating?	1) Turn by hand. (Be sure to turn the power OFF beforehand.) 2) Retighten 3) Visual inspection * Judgment on service life using “Menu #5 Maintenance Information” in Chapter 3, Section 3.4.5.	1) The fan should rotate smoothly. 2), 3) There should be no abnormalities.
	Ventilation route	Is there any cooling fin, air intake, or exhaust port clogging or foreign material adhesion?	Visual inspection	There should be no clogging or accumulation of dust, dirt or foreign materials. Clean it, if any, with a brush or air gun.

7.3.2 Periodic inspection 2--When the inverter is ON or it is running

Visually inspect the inverter for operation errors from the outside without removing the covers when the inverter is running or the power is ON.
Perform periodic inspections according to the items listed in Table 7.3-2 Periodic inspection list 2.

Table 7.3-2 Periodic inspection list 2

Inspection location		Inspection item	Inspection method	Criteria
Voltage		Is the main circuit and control circuit voltage normal?	Measure with a device such as a tester.	The standard specifications should be satisfied.
Structural parts such as frames, covers		Check for abnormal noise or excessive vibration when the cooling fans are in operation.	Perform a visual check, check by listening.	There should be no abnormalities.
Main circuit	Transformers, reactor	Check that the input voltages of the main and control circuits are correct.	Auditory, visual, and olfactory inspection	There should be no abnormalities.
	Magnetic contactors, relays	Check for chatters when the inverter is running.	Auditory inspection	There should be no abnormalities.
	Smoothing capacitors	Measure the capacitance if necessary.	* Judgment on service life using “Menu #5 Maintenance Information” in Chapter 3, Section 3.4.5.	Capacitance ≥ Initial value x 0.85
Cooling fans		Check for abnormal noise or excessive vibration when the cooling fans are in operation.	Auditory and visual inspections	There should be no abnormalities.

* Refer to Chapter 3 “3.4.5 Reading maintenance information “Maintenance information 5.CHE””.

[Supplementary information]

(1) The inspection interval (every year) of check items given in Table 7.3-1 and Table 7.3-2 is merely a guide. Make the interval shorter depending on the usage environment.

(2) Store and organize the inspection results to utilize them as a guide for operation and maintenance of the equipment and service life estimation.

(3) At the time of an inspection, check the cumulative run times on the keypad to utilize them as a guide for replacement of parts. Refer to “7.4.1 Judgment on service life”.

(4) The inverter has cooling fans inside to ventilate itself for discharging the heat generated by the power converter section. This will accumulate dust or dirt on the heat sink depending on the ambient environment.

In a dusty environment, the heat sink requires cleaning in a shorter interval than that specified in periodic inspection. Neglecting cleaning of the heat sink can rise its temperature, activating protective circuits to lead to an abrupt shutdown or causing the temperature rise of the surrounding electronic devices to adversely affect their service life.

7.4 List of Periodic Replacement Parts

Each part of the inverter has its own service life that will vary according to the environmental and operating conditions. It is recommended that the following parts be replaced at the specified intervals indicated in Table 7.4-1. When the replacement is necessary, consult your Fuji Electric representative.

Table 7.4-1 Replacement parts

Part name	Standard replacement intervals (See Note1 below.)	Replacement method, other
DC link bus capacitor	10 years (7 years in the ND mode)	-
Electrolytic capacitors on PCBs	10 years (7 years in the ND mode)	PCB replacement
Cooling fans	10 years (7 years in the ND mode)	-
Fuses	10 years (7 years in the ND mode)	FRN0346, 0432G2S-2G / FRN0261 to 1480G2□-4G
Waterproof gaskets	10 years (7 years in the ND mode)	-
Contact output [30 A/B/C] [Y5 A/C]	-	200,000 times (250 VAC, 0.3 A COSφ = 0.3 or, 48 VDC, 0.5 A (with resistive load))
Charging resistance short circuit 73X	-	100,000 times (if power turned ON within once an hour)
IGBT	-	Check “7.4.1 Judgment on service life” for details.

(Note 1) The estimated life expectancy is calculated based on the following conditions for each inverter specification. In environments with an ambient temperature above 40 °C or a large amount of dust or dirt, the standard replacement interval may be shorter.

HHD specification: Inverter ambient temperature: 40°C, load factor: 100%

HND specification: Inverter ambient temperature: 40°C, load factor: 80%

HD specification:*102 Inverter ambient temperature: 40°C, load factor: 80%

ND specification:*102 Inverter ambient temperature: 40°C, load factor: 80%

*102 HD and ND specification inverters are supported with ROM0600 or later.

Pay attention to the following items.

(1) The replacement intervals listed above are a guide for almost preventing parts from failure if those parts are replaced with new ones at the intervals. They do not guarantee the completely fault-free operation.

(2) Table 7.4-1 does not apply to unused spare parts being kept in storage.
It applies only when they are stored under the temporary and long-term storage conditions given in Chapter 1 “1.3.2 Storage environment” and energized approximately once a year.

(3) Cooling fans and waterproof gaskets can be replaced by users. For details, refer to the maintenance related documents. As for other parts, only the persons who have finished the Fuji Electric training course can replace them. For the purchase of spare cooling fans and the request for replacement of other parts, contact the sales agent where you purchased the product or your nearest Fuji Electric representative.

7.4.1 Judgment on service life

The inverter has the life prediction function for some parts which measures the discharging time or counts the voltage applied time, etc. The function allows you to monitor the current lifetime state on the LED monitor and judge whether those parts are approaching the end of their service life. The predicted values should be used only as a guide since the part life is influenced by the surrounding temperature and other usage environments. (Refer to Chapter 3 “3.4.5 Reading maintenance information “Maintenance information 5.CHE”.)

Table 7.4-2 Life prediction

Object of life prediction	Prediction function	End-of-life criteria	Prediction timing	Keypad “5: MAINTENANCE” on the LED monitor
DC link bus capacitor	Measurement of discharging time The discharging time of the DC link bus capacitor when the main power is turned OFF is measured, and the capacity is calculated.	85% or lower than initial capacitance at time of shipping	At periodic inspection (H98: bit 3 = 0)	5.05 (Capacitance)
		85% or lower than main circuit capacitor capacitance (necessary to measure at startup) under normal user operating conditions.	During ordinary operation (H98: bit 3 = 1)	5.05 (Capacitance)
	Main power supply ON time count The time elapsed when the voltage is applied to the DC link bus capacitor is counted. Furthermore, the time is corrected based on the capacity measurement.	When 87,600 hours (10 years) of operation has been exceeded	During ordinary operation	5.26 (Elapsed time) 5.27 (Remaining time)
Electrolytic capacitors on PCBs	The time elapsed when the voltage is applied to the capacitors is counted. Furthermore, the elapsed time based on the ambient temperature is corrected.	When 87,600 hours (10 years) of operation has been exceeded	During ordinary operation	5.06 (Cumulative run time)
Cooling fans	The cooling fan run time is counted.	When 87,600 hours (10 years) of operation has been exceeded	During ordinary operation	5.07 (Cumulative run time)
IGBT	The IGBT life expectancy is estimated from changes in IGBT temperature.	The system determines that the life has been reached when the estimated IGBT life expectancy drops below 10% of the design life.	Normal run time H83: bit 13 = 1	5.58 (Estimated IGBT life expectancy)

The service life of the DC link bus capacitor can be judged by "**(1) Measurement of discharging time of the DC link bus capacitor**" or "**(2) ON-time counting of DC link bus capacitor**."

(1) Measurement of discharging time of the DC link bus capacitor

- The discharging time of the DC link bus capacitor depends largely on the inverter's internal load conditions, e.g., options attached or ON/OFF of digital I/O signals. If different from the initial value load conditions subject to comparison (excl. terminal [EN1], [EN2]), it will not be possible to obtain measurement accuracy, and therefore measurement is not be performed.
- When connecting a converter, or when connecting a DC common to another inverter, measurement is not performed.
- The capacitance measuring conditions at the time of shipping are drastically restricted, e.g., all input terminals being OFF in order to stabilize the load and measure the capacitance accurately. Those conditions are, therefore, different from the actual operating conditions in almost all cases. If conditions are the same as the factory default conditions (excl. terminal [EN1], [EN2]), the discharge time is automatically measured when the power is turned OFF. However, the time will not be automatically measured if the conditions are different. In such a case, return the conditions to the factory default values, and turn OFF the inverter. Measurement is performed automatically (see capacitance measurement procedure below.)

  🕮 Refer to "[1] Measuring the capacitance of DC link bus capacitor in comparison with initial value at time of shipment".

- To measure the capacitance of the DC link bus capacitor under ordinary operating conditions when the power is turned OFF, it is necessary to set up the load conditions for ordinary operation and measure the reference capacitance (initial setting) when the inverter is introduced. Refer to (2) on the following page for details on the procedure used to set the capacitor capacitance (default value). Performing the setup procedure automatically detects and saves the measuring conditions of the DC link bus capacitor.

  🕮 Refer to "[2] Measuring the capacitance of the DC link bus capacitor under ordinary operating conditions"

  Setting bit 3 of H98 data at "0" restores the inverter to the measurement in comparison with the initial capacitance measured at shipment.

Note

When the inverter uses an auxiliary control power input, the load conditions widely differ so that the discharging time cannot be accurately measured.

In this case, measurement of the discharging time can be disabled with function code H98 (bit 4 = 0) for preventing unintended measurement.

(2) ON-time counting of DC link bus capacitor

- In a machine system where the inverter main power is rarely shut down, the inverter does not measure the discharging time. For this reason, a function is also provided to count the length of time that voltage is applied to main circuit capacitors (main circuit ON time) in order to determine the capacitor life expectancy. (The display shows the elapsed time "5_26" and lifetime remaining "5_27". Refer to the "DC link bus capacitor" field in Table 7.4-2 Life prediction.)

[1] Measuring the capacitance of DC link bus capacitor in comparison with initial value at time of shipment

The measuring procedure given below measures the capacitance of DC link bus capacitor in comparison with initial one at shipment when the power is turned OFF. The measuring result can be displayed on the keypad as a ratio (%) to the initial capacitance.

---------- Capacitance measuring procedure ----------

1) To ensure validity in the comparative measurement, put the condition of the inverter back to the state at factory shipment.
   - Remove the option card (if already in use) from the inverter.
   - In case another inverter is connected via the DC link bus to the [P(+)] and [N(-)] terminals of the main circuit, disconnect the wires. It is not required to disconnect the DC reactor (optional), if any.
   - Disconnect power wires for the auxiliary input to the control circuit ([R0], [T0]).
   - Install the standard keypad (TP-E2).
     * If the keypad has been replaced with the multi-function keypad (TP-A2SW) (option) after purchasing the inverter, return it to the standard keypad.
   - Turn OFF all the digital input signals fed to terminals [FWD], [REV], and [X1] to [X9] of the control circuit.
   - If a potentiometer is connected to terminal [13], disconnect it.
   - If an external apparatus is attached to terminal [PLC], disconnect it.
   - Ensure that transistor outputs [Y1] to [Y4] and relay output terminals [Y5 A/C] and [30 A/B/C] do not turn ON.
   - Disable the RS-485 communications link and CANopen communications link.

Note If negative logic is specified for the transistor output and relay output signals, they are considered ON when the inverter is not running. Specify positive logic for them.

   - Keep the ambient temperature within 25 ±10°C (77 ±18 °F).
2) Turn ON the main circuit power.
3) Confirm that the cooling fan is rotating and the inverter is in stopped state. Disable the cooling fan ON/OFF control (H06 = 0).
4) Shut down the main circuit power.
5) The inverter automatically starts the measurement of the capacitance of the DC link bus capacitor.
   Ensure that “ . . . . . ” appears on the LED monitor.

Note If “ . . . . . ” does not appear on the LED monitor, the measurement has not started. Check the conditions listed in 1).

6) After “ . . . . . ” has disappeared from the LED monitor, turn ON the main circuit power again.
7) Select Menu #5 “Maintenance Information” in Programming mode and check the reading (electrostatic capacity ratio (%) of the DC link bus capacitor).

---

[2] Measuring the capacitance of the DC link bus capacitor under ordinary operating conditions

The inverter automatically measures the capacitance of the DC link bus capacitor under ordinary operating conditions when the power is turned OFF. This measurement requires setting up the load conditions for ordinary operation and measuring the reference capacitance when the inverter is introduced to the practical operation, using the setup procedure given below.

Perform measurement immediately after purchasing the inverter (after trial run), or immediately after replacing the DC link bus capacitor.

---------- Reference capacitance setup procedure ----------

1) Set bit 3 of function code H98 at “1” (User mode) to enable the user to specify the judgment criteria for the service life of the DC link bus capacitor.
2) Turn OFF all run commands.
3) Make the inverter ready to be turned OFF under ordinary operating conditions.
4) Set both function codes H42 (Capacitance of DC link bus capacitor) and H47 (Initial capacitance of DC link bus capacitor) to “0”.
5) Turn OFF the inverter, and the following operations are automatically performed.

   The inverter measures the discharging time of the DC link bus capacitor and saves the result in function code H47 (Initial capacitance of DC link bus capacitor).

   DC link bus capacitor measurement conditions (terminal [X1 to X9], [Y1 to Y5] ON/OFF status, whether inverter equipped with option card or keypad) are automatically detected and saved.
   During measurement, “ . . . . . ” appears on the LED monitor.
6) Turn ON the inverter again.

   Ensure that function code H42 (capacitance of DC link bus capacitor) and H47 (initial capacitance of DC link bus capacitor) values are appropriate.
   Shift to Menu #5 “Maintenance Information” and ensure that the electrostatic capacity ratio (%) of the DC link bus capacitor is 100%.

Note If the measurement has failed, “ 1 ” is entered into both H42 and H47. Remove the factor of the failure and conduct the measurement again.

Hereafter, each time the inverter is turned OFF, the DC link bus capacitor discharge time is automatically measured if the above conditions are met. Periodically check the electrostatic capacity ratio (%) of the DC link bus capacitor with Menu #5 “Maintenance Information” in Programming mode.

Note The condition given above tends to produce a rather large measurement error. If this mode gives you a lifetime alarm, revert bit 3 of H98 (Main circuit capacitor life judgment selection) to the default setting (bit 3 = 0) and conduct the measurement under the condition at the time of factory shipment.

[3] Early warning of lifetime alarm

For the components listed in Table 7.4-2, the inverter can issue an early warning of lifetime alarm LIFE at one of the transistor output terminals [Y1] to [Y4] and relay output terminals [Y5 A/C] and [30 A/B/C] as soon as any one of the levels specified in Table 7.4-2 has been exceeded. If even one of the service life-limited parts exceeds the criteria, an ON signal is output.

7.5 Measuring the Amount of Electricity in Main Circuit

Because the voltage and current of the power supply (input, primary circuit) of the main circuit of the inverter and those of the motor (output, secondary circuit) contain harmonic components, the readings may vary with the type of the meter. Use meters indicated in Table 7.5-1 when measuring main circuit.

The power factor cannot be measured by a commercially available power-factor meter that measures the phase difference between the voltage and current. To obtain the power factor, measure the power, voltage and current on each of the input and output sides and use the following formula.

Three-phase input

$$\text{Power factor} = \frac{\text{Power (W)}}{\sqrt{3} \times \text{voltage (V)} \times \text{current (A)}} \times 100\ (\%)$$

Single-phase input

$$\text{Power factor} = \frac{\text{Power (W)}}{\text{Voltage (V)} \times \text{current (A)}} \times 100\ (\%)$$

Table 7.5-1 Meters for main circuit measurement

Item	Input (primary) side			Output (secondary) side			DC link bus voltage (P(+)-N(-))
Waveform	Voltage		Current 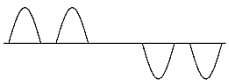	Voltage 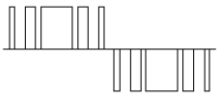		Current 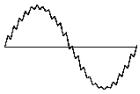	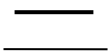
Name of meter	Ammeter AR, AS, AT	Voltmeter VR, VS, VT	Wattmeter WR, WT	Ammeter AU, AV, AW	Voltmeter VU, VV, VW	Wattmeter WU, WW	DC voltmeter V
Type of meter	Moving iron type	Rectifier or moving iron type	Digital AC power meter	Digital AC power meter	Digital AC power meter	Digital AC power meter	Moving coil type
Symbol of meter			—	—	—	—	

Note: If measuring the output current with a moving-iron type meter, and the output voltage with a rectifier type meter, an error may occur. Furthermore, there is also a risk of meter burnout. To measure with greater accuracy, the use of a digital AC power meter is recommended.

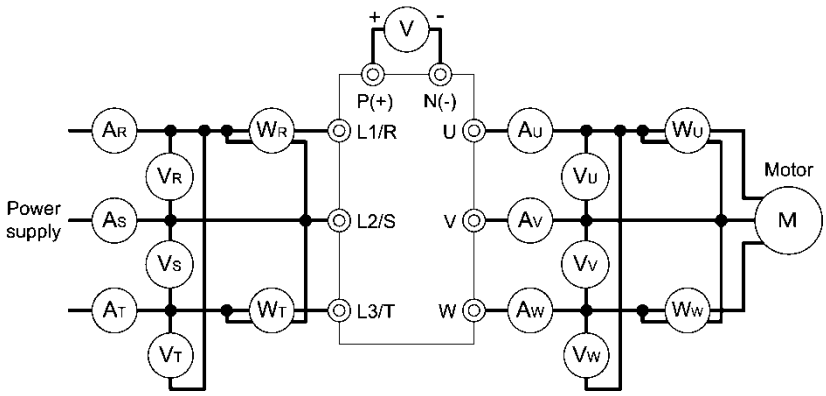

Fig. 7.5-1 Connection of meters

7.6 Insulation Test

Since the inverter has undergone an insulation test before shipment, avoid making a Megger test at the customer's site.

If a Megger test is unavoidable for the main circuit, observe the following instructions; otherwise, the inverter may be damaged. A withstand voltage test may also damage the inverter if the test procedure is wrong.

As with the megger test, performing a withstand voltage test incorrectly may damage the product. When the withstand voltage test is necessary, consult your Fuji Electric representative.

7.6.1 Megger test of main circuit

1) Use a 500 V DC megohmmeter, and be sure to measure with the main power turned OFF.
2) If the test voltage is also applied to the control circuit due to the way in which the system is wired, disconnect all connections to the control circuit.
3) Connect the main circuit terminals with common wire as shown in Fig. 7.6-1.
   (Terminals [R0] and [T0] can be found on the FRN0008 to 0432G2S-2G/FRN0004 to 1480G2□-4G.)
4) Perform the megger test only across the main circuit common wires and ground (⏚).
5) The result is normal if the megohmmeter reads 5 MΩ or higher. (The value is measured on the inverter alone.)

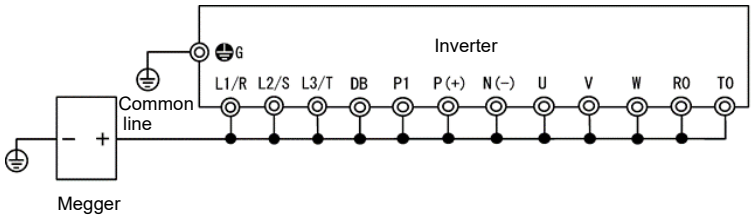

Fig. 7.6-1 Main circuit terminal connection for Megger test

7.6.2 Insulation test of control circuit

Do not make a Megger test or withstand voltage test for the control circuit. Use a high resistance range tester for the control circuit.

1) Disconnect all the external wiring from the control circuit terminals.
2) Perform a continuity test to the ground. The result is normal if the reading is 1 MΩ or higher.

7.6.3 Insulation test of external main circuit and sequence control circuit

Disconnect all the wiring connected to the inverter so that the test voltage is not applied to the inverter.

7.7 Product Inquiries and Warranty

7.7.1 Inquiry request

If necessary to make an inquiry relating to such aspects as product failure or damage, or anything that is in doubt, please notify Fuji Electric of the following.

1) Inverter type. (Refer to Chapter 1 “1.1 Acceptance Inspection (Nameplates and Inverter Type)”.
2) SER No. (serial number of equipment). (Refer to Chapter 1 “1.1 Acceptance Inspection (Nameplates and Inverter Type)”.
3) Function codes and their data that you changed. (Refer to Chapter 3 “3.4.2 Checking changed function codes “Data Checking: C.rEP””.
4) ROM version. (Refer to the maintenance item 5_ 14 in Chapter 3 “3.4.5 Reading maintenance information “Maintenance Information: 5.CHE””.
5) Date of purchase
6) Inquiries (for example, point and extent of breakage, uncertainties, failure phenomena, and other circumstances)

7.7.2 Product warranty

To all our customers who purchase Fuji Electric products included in this documentation:

Please take the following items into consideration when placing your order.

When requesting an estimate and placing your orders for the products included in these materials, please be aware that any items such as specifications which are not specifically mentioned in the contract, catalog, specifications or other materials will be as mentioned below.

In addition, the products included in these materials are limited in the use they are put to and the place where they can be used, etc., and may require periodic inspection. Please confirm these points with your sales representative or directly with this company.

Furthermore, regarding purchased products and delivered products, we request that you take adequate consideration of the necessity of rapid receiving inspections and of product management and maintenance even before receiving your products.

[1] Free of charge warranty period and warranty range

(1) Free of charge warranty period

1) The product warranty period is “1 year from the date of purchase” or 24 months from the manufacturing date imprinted on the name place, whichever date is earlier.
2) However, in cases where the use environment, conditions of use, use frequency and times used, etc., have an effect on product life, this warranty period may not apply.
3) Furthermore, the warranty period for parts restored by Fuji Electric’s Service Department is “6 months from the date that repairs are completed.”

(2) Warranty range

1) In the event that breakdown occurs during the product’s warranty period which is the responsibility of Fuji Electric, Fuji Electric will replace or repair the part of the product that has broken down free of charge at the place where the product was purchased or where it was delivered. However, if the following cases are applicable, the terms of this warranty may not apply.
   (1) The failure was caused by inappropriate conditions, environment, handling or usage methods, etc., which are not specified in the catalog, instruction manual, specifications, or other relevant documents.
   (2) The failure was caused by some reason other than the purchased or delivered Fuji Electric product.
   (3) The failure was unrelated to a Fuji Electric product, such as a problem with the design of the customer's equipment or software.
   (4) The failure was caused by running a program other than that supplied by Fuji Electric for a programmable Fuji Electric product, or as a result of using such a program.
   (5) The failure was caused by disassembly, modifications, or repairs carried out by a party other than Fuji Electric.
   (6) The failure was caused by a failure to properly maintain or replace the consumable parts, etc. specified in the instruction manual or catalog, etc.

(7) The failure was caused by a scientific or technical problem that was not foreseen when making practical application of the product at the time it was purchased or delivered.

(8) The product was not used in the manner in which it was originally intended to be used.

(9) The failure was caused by a reason for which Fuji Electric holds no responsibility, such as natural or other disaster.

2) Furthermore, the warranty specified herein shall be limited solely to the purchased or delivered product.

3) The upper limit for the warranty scope shall be as specified in item (1) above, and any damages (damage to or loss of machinery or equipment, or lost profits from the same, etc.) consequent to or resulting from a failure of the purchased or delivered product shall be excluded from coverage by this warranty.

(3) Trouble diagnosis

As a rule, the customer is requested to carry out a preliminary trouble diagnosis. However, at the customer's request, Fuji Electric or its service network can perform the trouble diagnosis for a fee. In this case, the customer is asked to assume the burden for charges levied in accordance with Fuji Electric's fee regulations.

[2] Exclusion of liability for loss of opportunity, etc.

Regardless of whether a failure occurs during or after the free of charge warranty period, Fuji Electric shall not be liable for any loss of opportunity, loss of profits, or damages arising from special circumstances, secondary damages, accident compensation to another company, or damages to products other than Fuji Electric's products, whether foreseen or not, which Fuji Electric is not responsible for causing.

[3] Repair period after production stoppage, spare parts supply period (maintenance period)

With regards to models (products) which have gone out of production, Fuji Electric shall carry out repairs for a period of 7 years following production stoppage, from the month and year when the production stoppage occurs. In addition, Fuji Electric shall continue to supply the spare parts required for repairs for a period of 7 years, from the month and year when the production stoppage occurs. However, if it is estimated that the life cycle of certain electronic and other parts is short and it will be difficult to procure or produce those parts, there may be cases where it is difficult to provide repairs or supply spare parts even within this 7-year period. For details, please confirm with the Fuji Electric business office or our service office.

[4] Delivery conditions

The product delivered and handed over to the customer shall be the standard product for which no settings have been specified, or adjustments made with an application, and Fuji Electric accepts no responsibility for any on-site adjustments or test operation.

[5] Service description

The price of the purchased or delivered product does not include service costs such as those required for dispatching technicians and so on. Fuji Electric will be more than happy to discuss this further upon request.

[6] Applicable scope of service

The above content applies to transactions and use within Japan. Please consult your dealer or Fuji Electric regarding transactions or use outside Japan.

Chapter 8
BLOCK DIAGRAMS FOR CONTROL LOGIC

This chapter describes the main block diagrams of the control section.

Contents

8.1 Meanings of Symbols Used in the Control Block Diagrams ····· 8-1
8.2 Frequency Setting Section ····· 8-2
8.3 Operation Command Section ····· 8-5
8.4 PID Control Section (for Processing) ····· 8-6
8.5 PID Control Section (for Dancer) ····· 8-7
8.6 PID Control Section (for Air Conditioning and Pump) ····· 8-8
8.7 External PID control (for processing) ····· 8-10
8.8 Position Control Section ····· 8-12
8.9 Control Section ····· 8-13
8.9.1 V/f control ····· 8-13
[1] Common ····· 8-13
[2] Without speed sensor ····· 8-14
[3] With speed sensor ····· 8-15
8.9.2 Vector control ····· 8-16
[1] Common ····· 8-16
[2] Torque command / torque limit ····· 8-17
[3] Speed control / torque control ····· 8-18
[4] Speed limit and over speed protection processing ····· 8-19
[5] Motor drive ····· 8-20
[6] Vector control: Synchronous motor drive ····· 8-21
8.10 FM Output Section ····· 8-23

The high-performance, multi-function inverter FRENIC-MEGA is provided with various functions that allow operations to meet the application requirements. Refer to Chapter 5 “FUNCTION CODES” for details of each function code.

Function codes are mutually related and priority order is given depending on the function codes and data thereof.

This chapter shows major internal control block diagrams. Understand the diagrams together with the explanation of each function code to correctly set up each function code.

Note that the internal control block diagrams show only the function codes mutually related. Refer to Chapter 5 “FUNCTION CODES” for function codes operated individually and each function code explanation.

8.1 Meanings of Symbols Used in the Control Block Diagrams

This section explains major codes, with examples, used in the block diagrams from the next item.

Table 8.1-1 Codes and meanings

Symbol	Meaning
[FWD], [Y1], etc.	These symbols denote general-purpose input/output terminals of the inverter control circuit terminal blocks.
“FWD”, “REV”, etc.	These symbols denote control signals (input) or state signals (output) allocated to the control circuit terminals.
	This is a low-pass filter. Time constant is changeable based on function code data.
SET FREQUENCY	This symbol denotes control command used inside the inverter.
	This indicates upper limit limiter. This limits an upper limit value by function code setting or a constant.
	This indicates lower limit limiter. This limits a lower limit value by function code setting or a constant.
	This is 0 (zero) limiter. This prevents data from becoming minus.
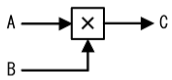	This denotes a set frequency given by a current or a voltage. This is a gain analog multiplier for an analog output signal etc., calculated by C = A x B.
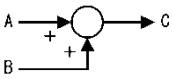	This denotes an adder of two signals or amounts, calculated by C = A + B. This becomes a subtracter when B is a minus sign, calculated by C = A - B.

Symbol	Meaning
F01	This denotes a function code.
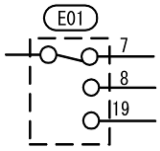	This indicates a switch controlled by a function code. Figures of switch terminals indicate function code data.
LINK OPERATION SELECTION “LE” 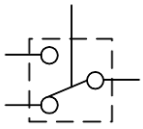	This indicates a switch controlled by an internal function control command. The example on the left indicates a link operation selection command “LE” allocated to a digital input terminal.
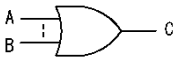	This denotes a logical sum (OR) circuit. In the case of the positive logic, when any one of inputs is ON, C=ON, and when all inputs are OFF, C=OFF.
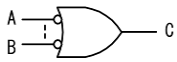	This denotes an NOR (NOR-OR) circuit. In the case of the positive logic, when any one of inputs is OFF, C=ON, and when all inputs are ON, C=OFF.
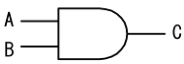	This denotes a conjunction (AND) circuit. In the case of the positive logic, only when A=ON and B=ON, C=ON, and C=OFF under other conditions.
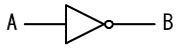	This denotes a logical negation (NOT) circuit. In the case of the positive logic, when A = ON, B = OFF, and when A = OFF, B = ON.

8.2 Frequency Setting Section

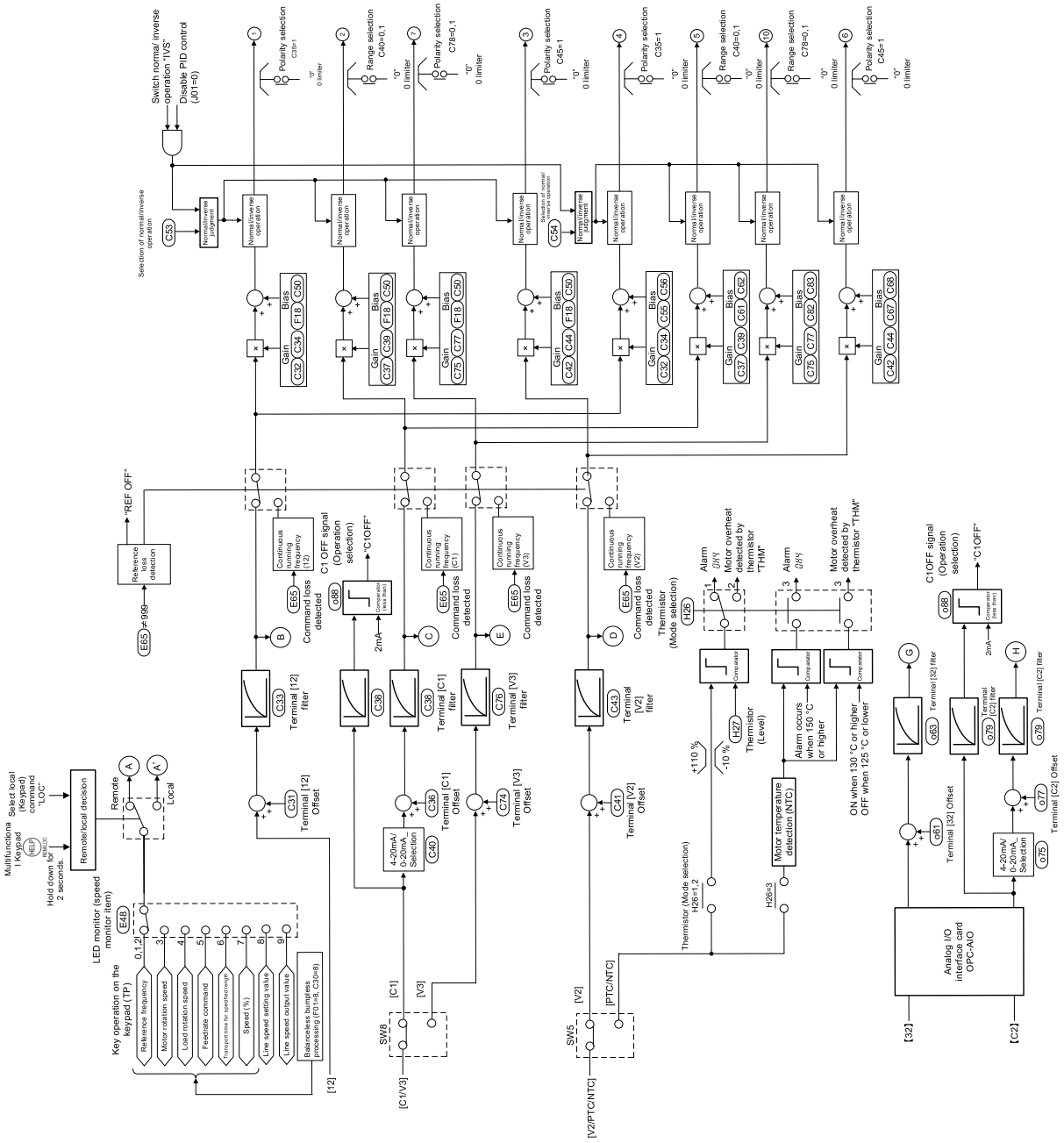

Fig. 8.2-1 Frequency setting section block diagram

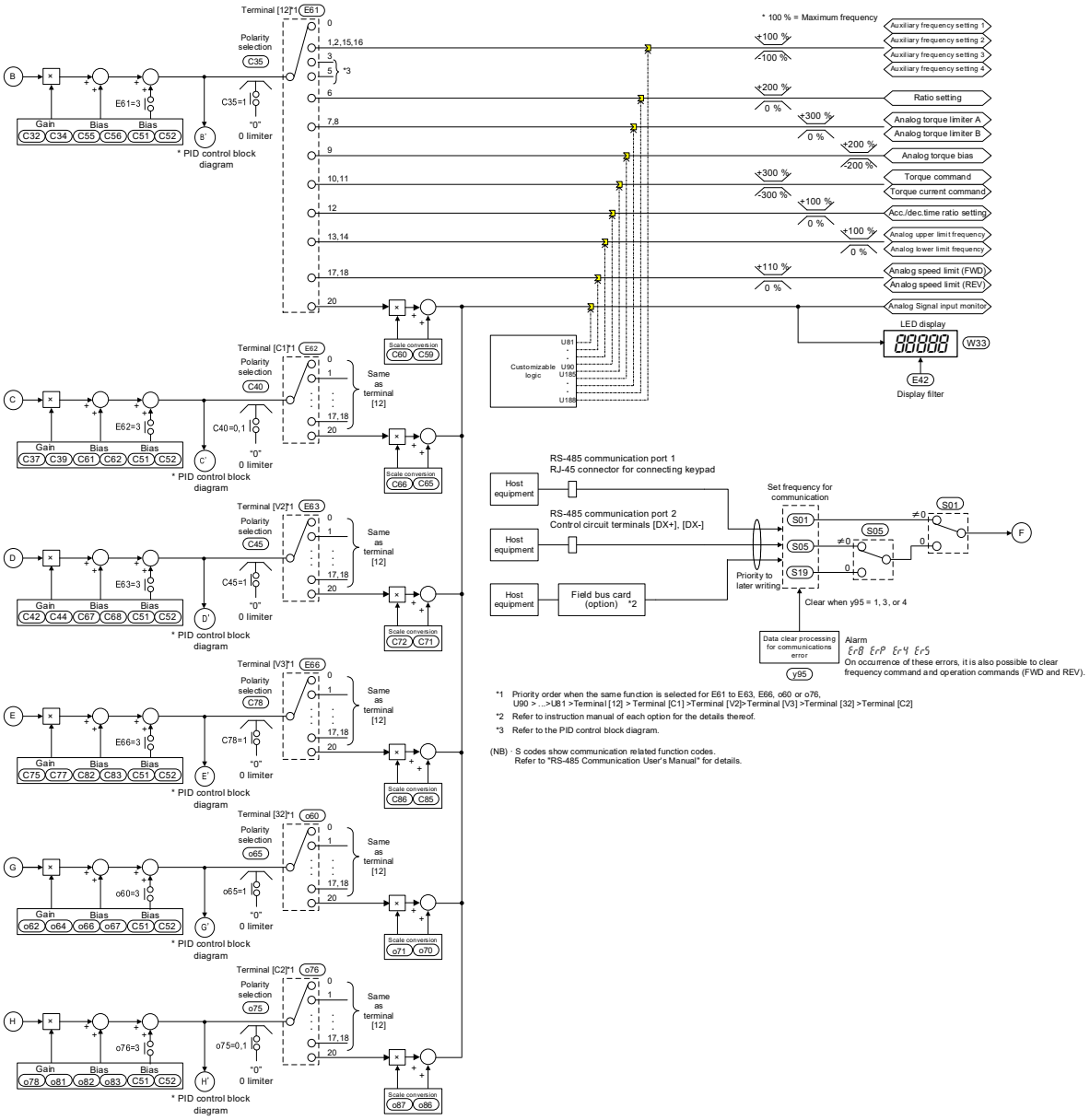

Fig. 8.2-2 Frequency setting section block diagram

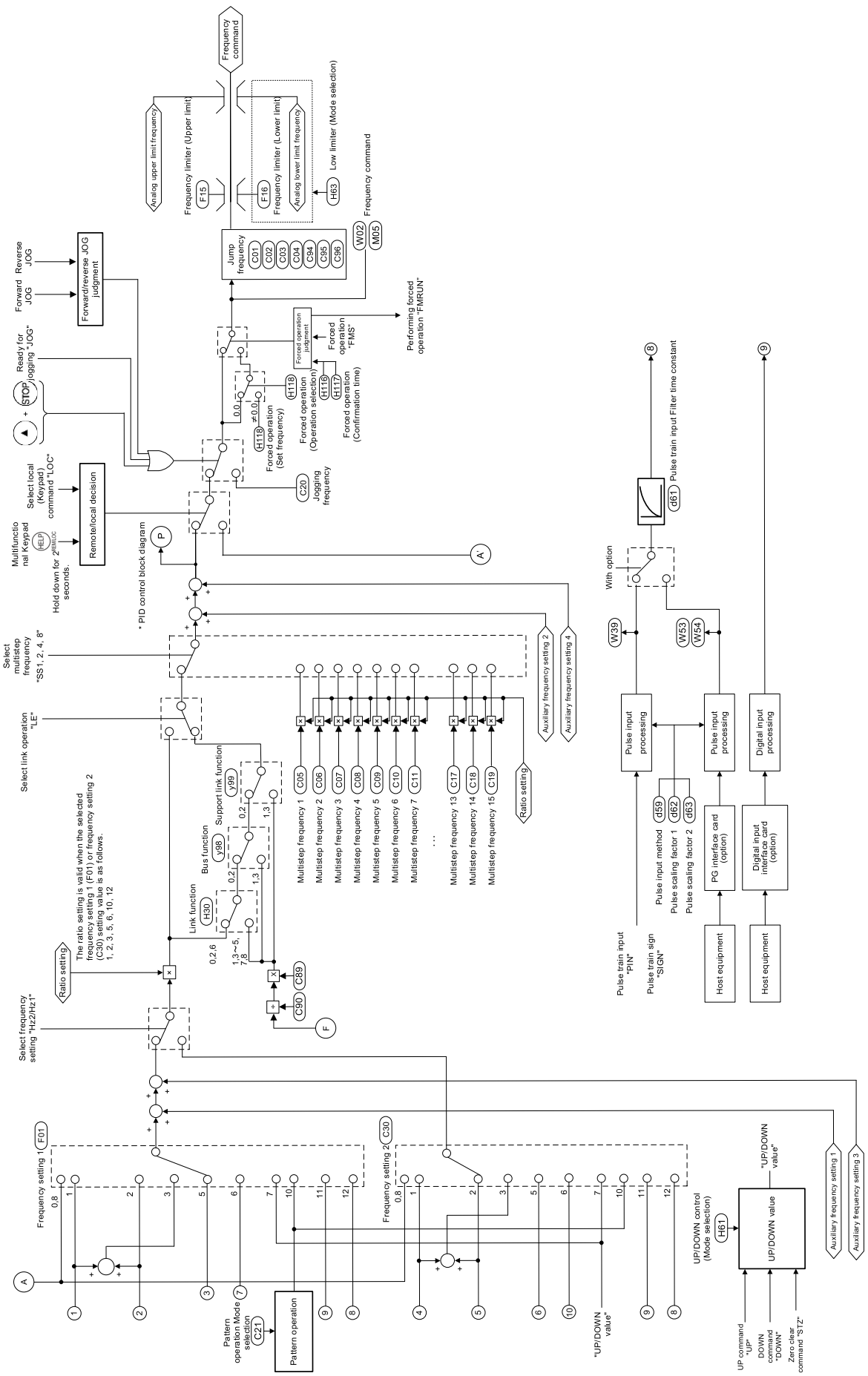

Fig. 8.2-3 Frequency setting section block diagram

8.3 Operation Command Section

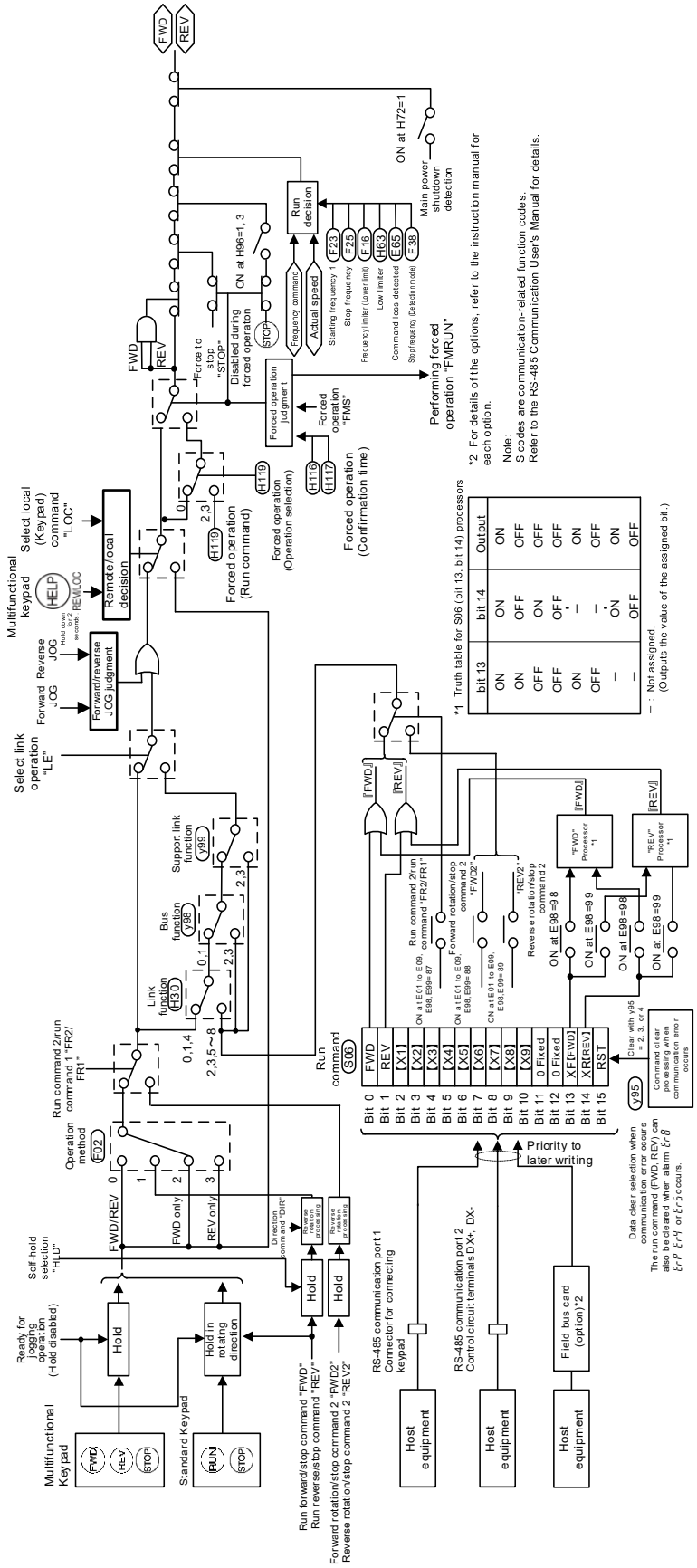

Fig.8.3 -1 Operation command section block diagram

8.4 PID Control Section (for Processing)

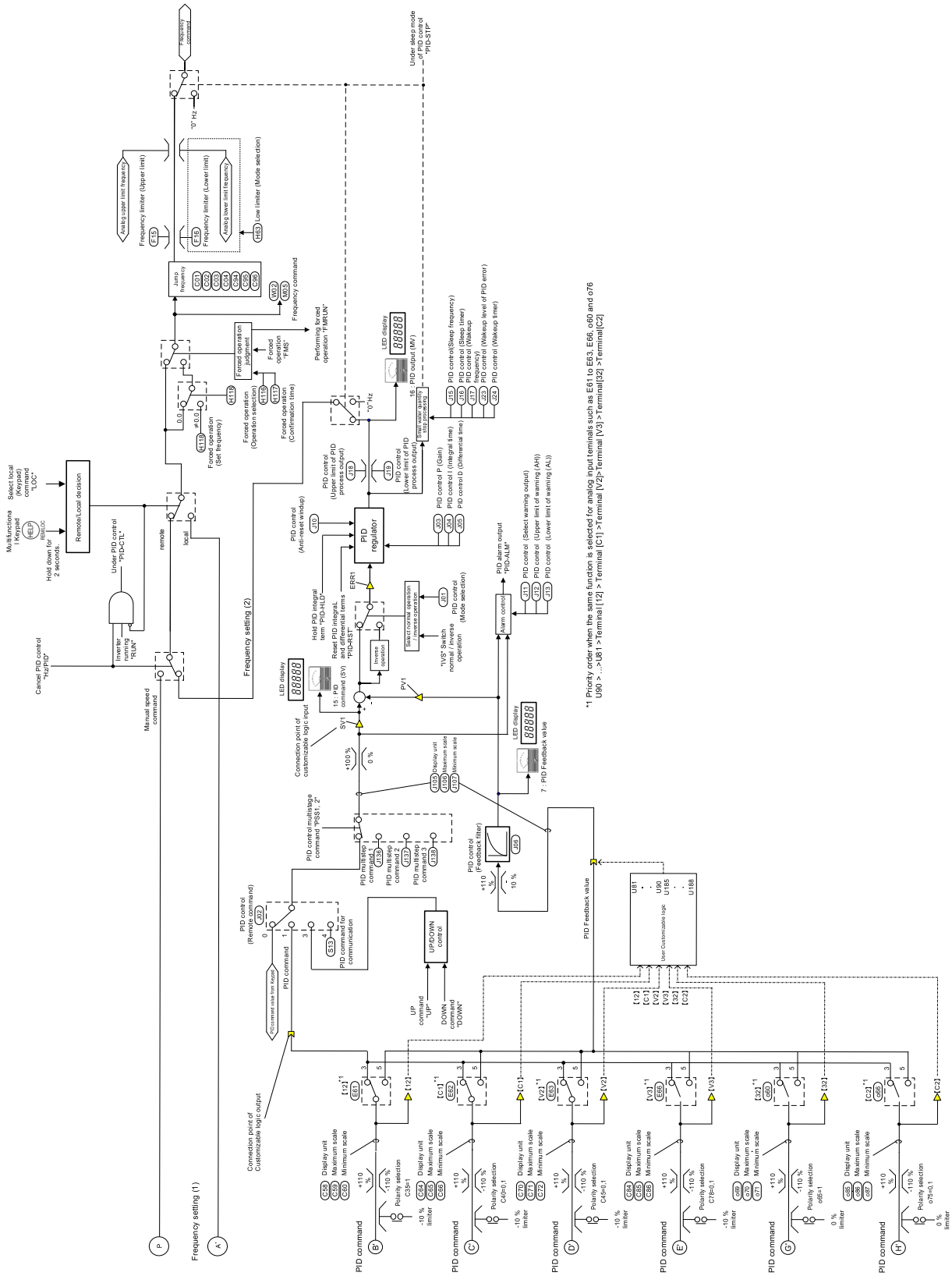

Fig. 8.4-1 PID control section (for processing) block diagram

8.5 PID Control Section (for Dancer)

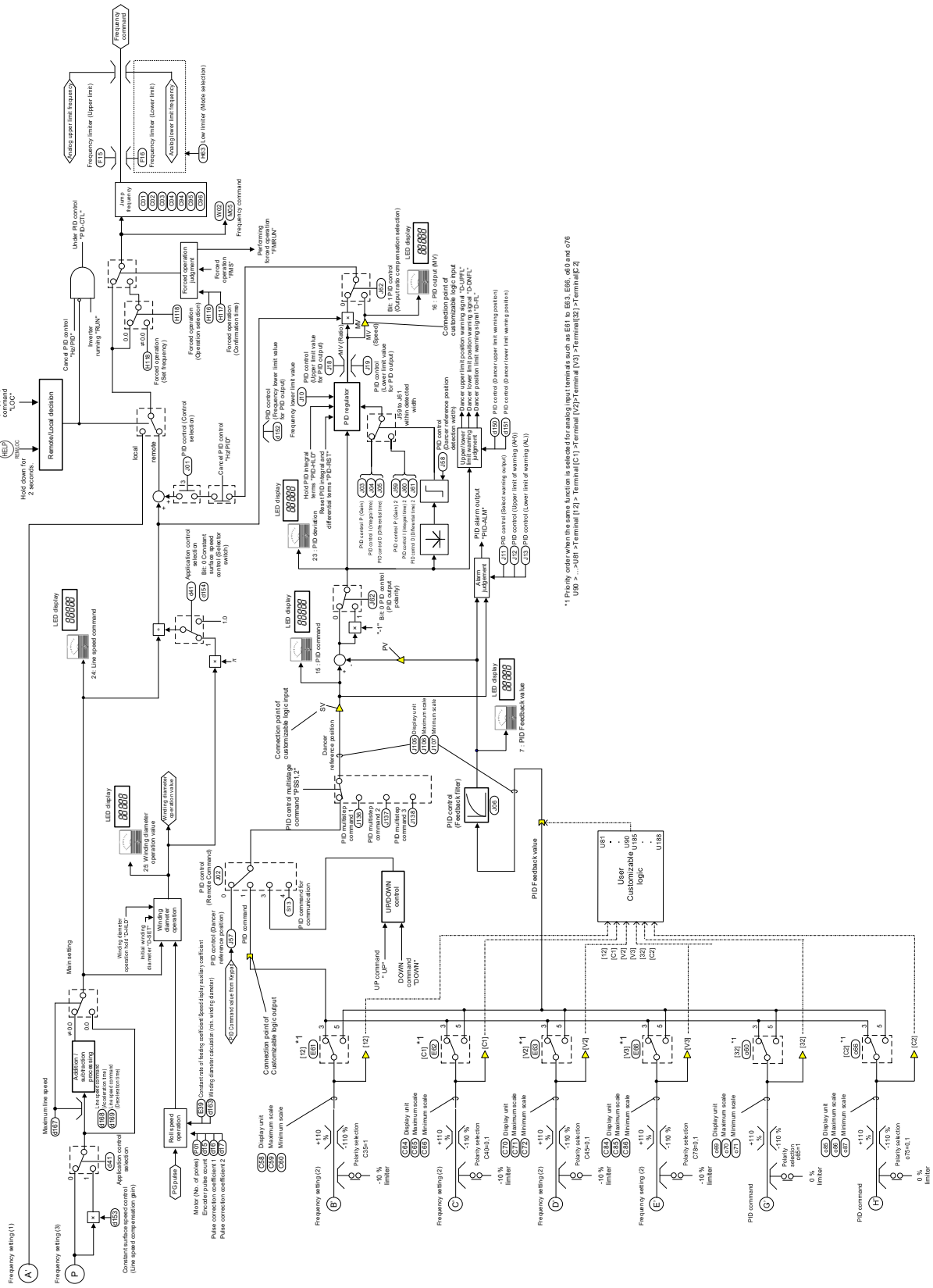

Fig. 8.5-1 PID control section (for dancer) block diagram

8.6 PID Control Section (for Air Conditioning and Pump)

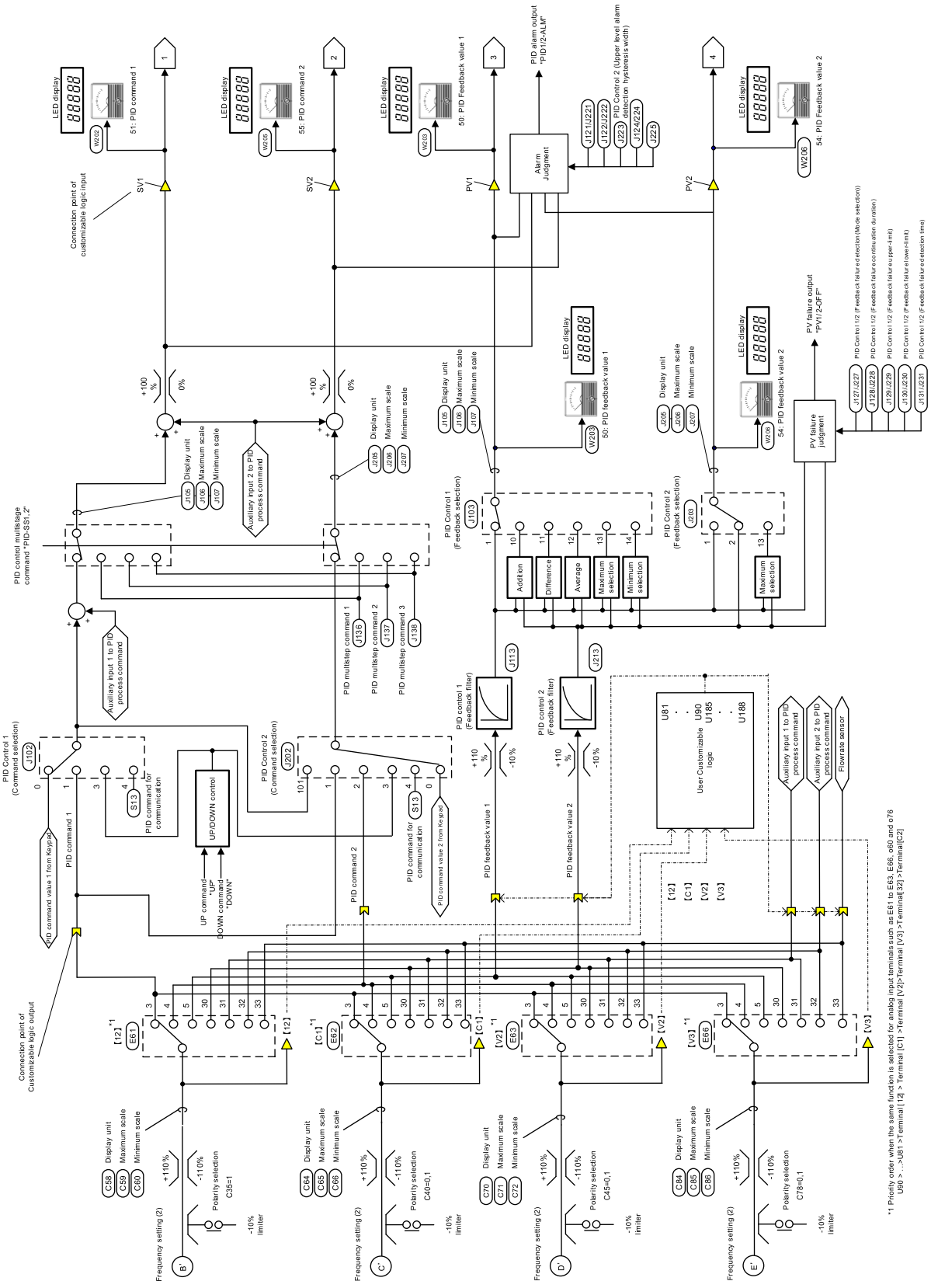

Fig. 8.6-1 PID control section (for air conditioning and pump) block diagram

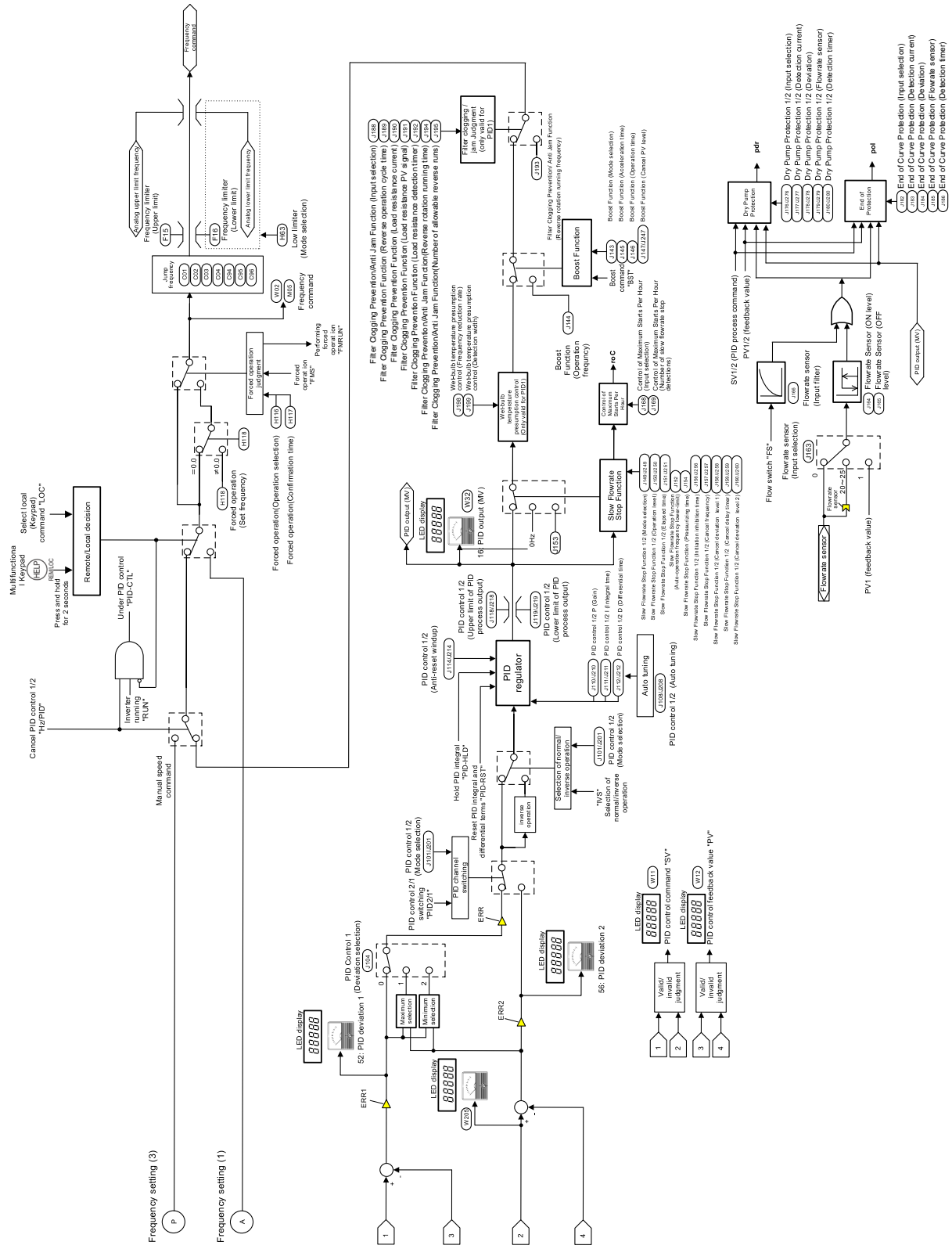

Fig. 8.6-2 PID control section (for air conditioning and pump) block diagram

8.7 External PID control (for processing)

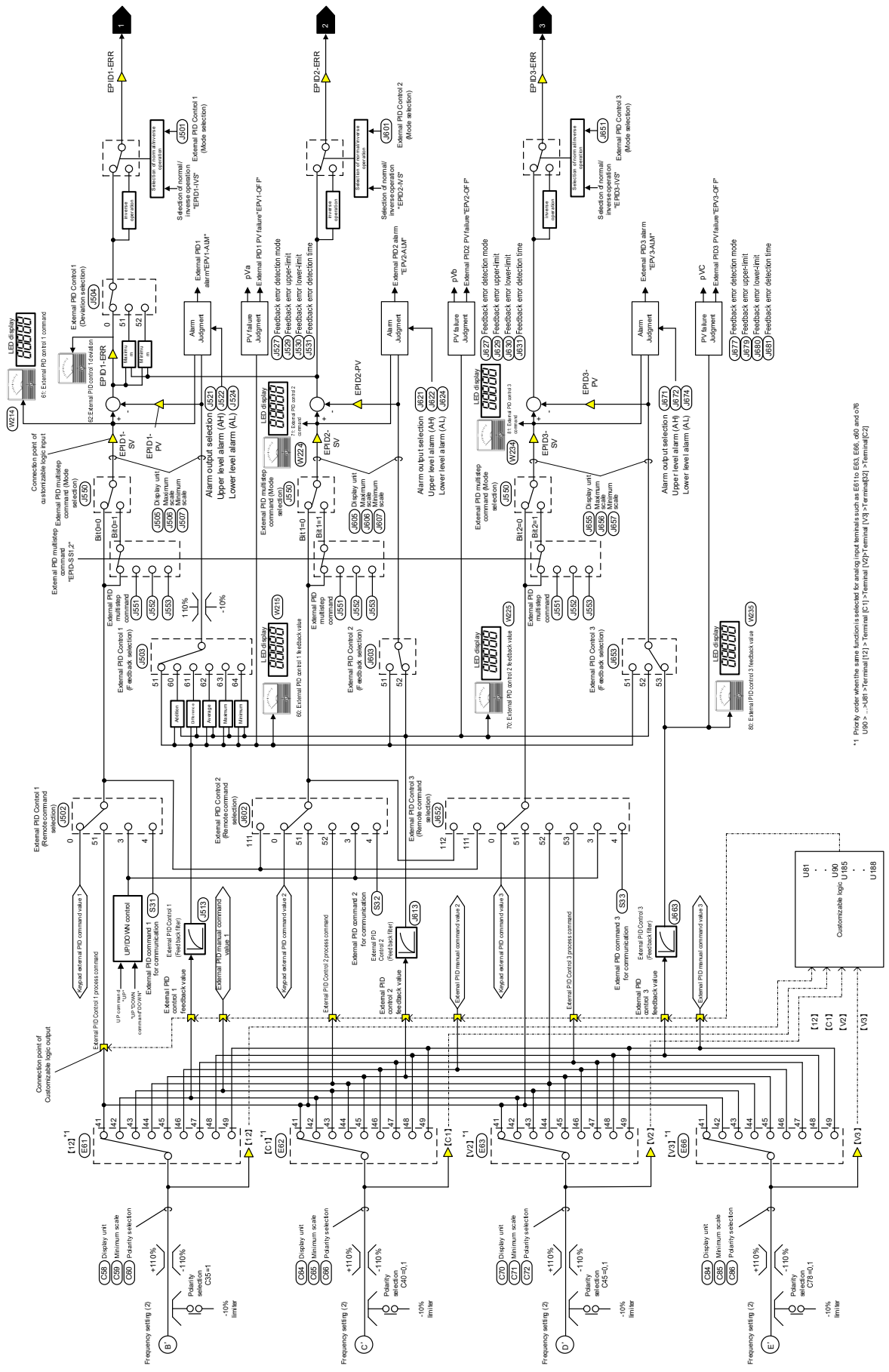

Fig. 8.7-1 External PID control (for processing) block diagram

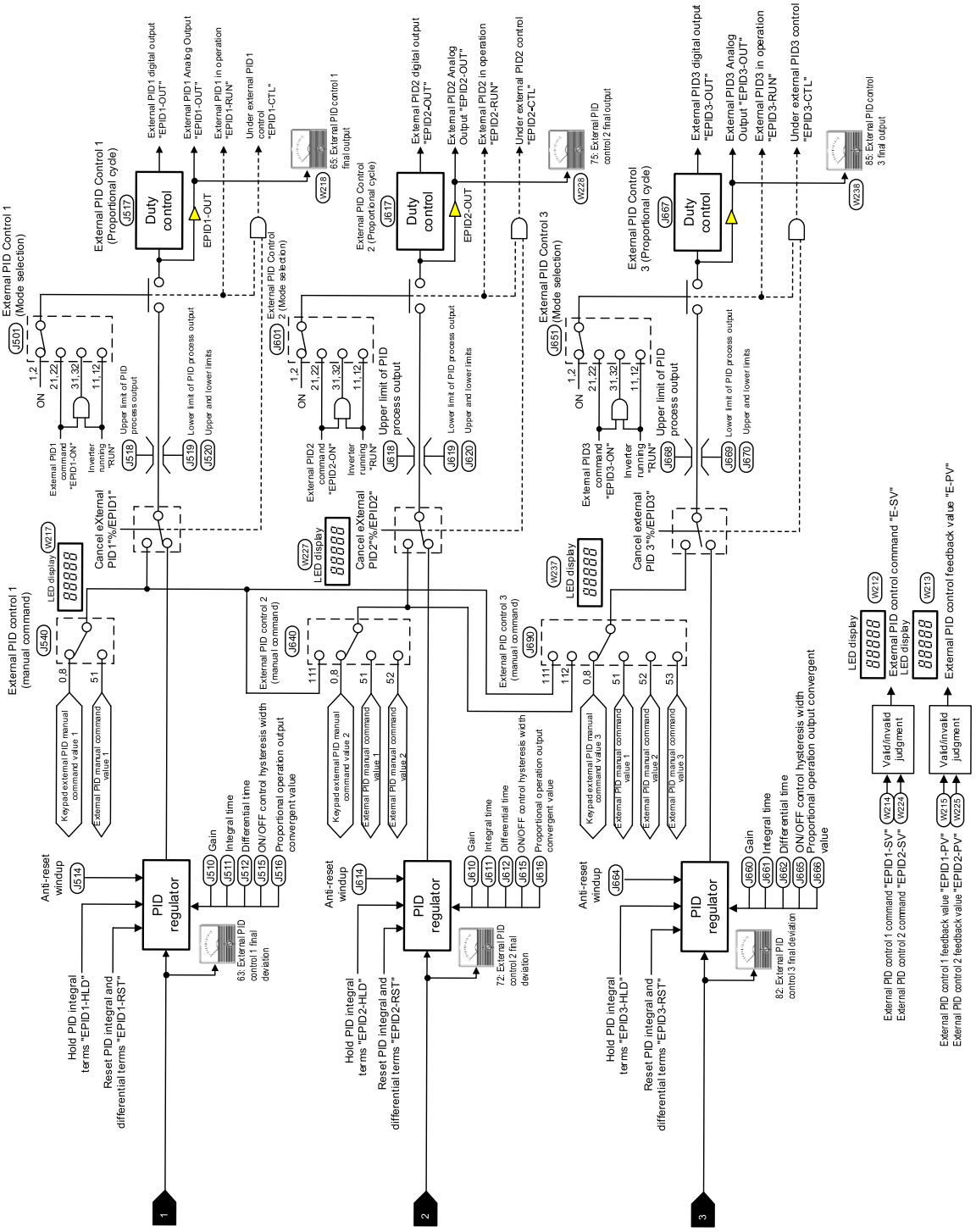

Fig. 8.7-2 External PID control (for processing) block diagram

8.8 Position Control Section

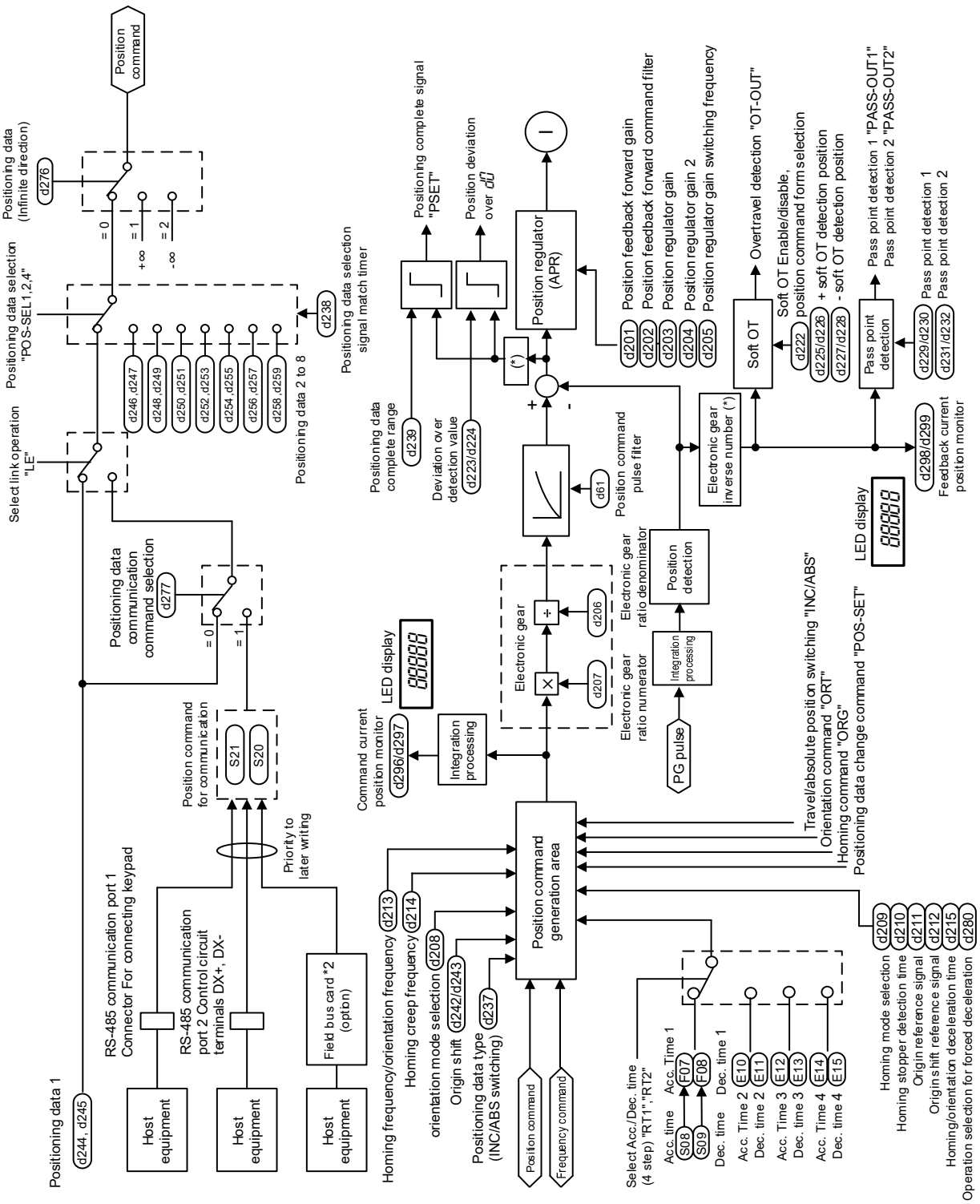

Fig. 8.8-1 Position control block diagram

8.9 Control Section

8.9.1 V/f control

[1] Common

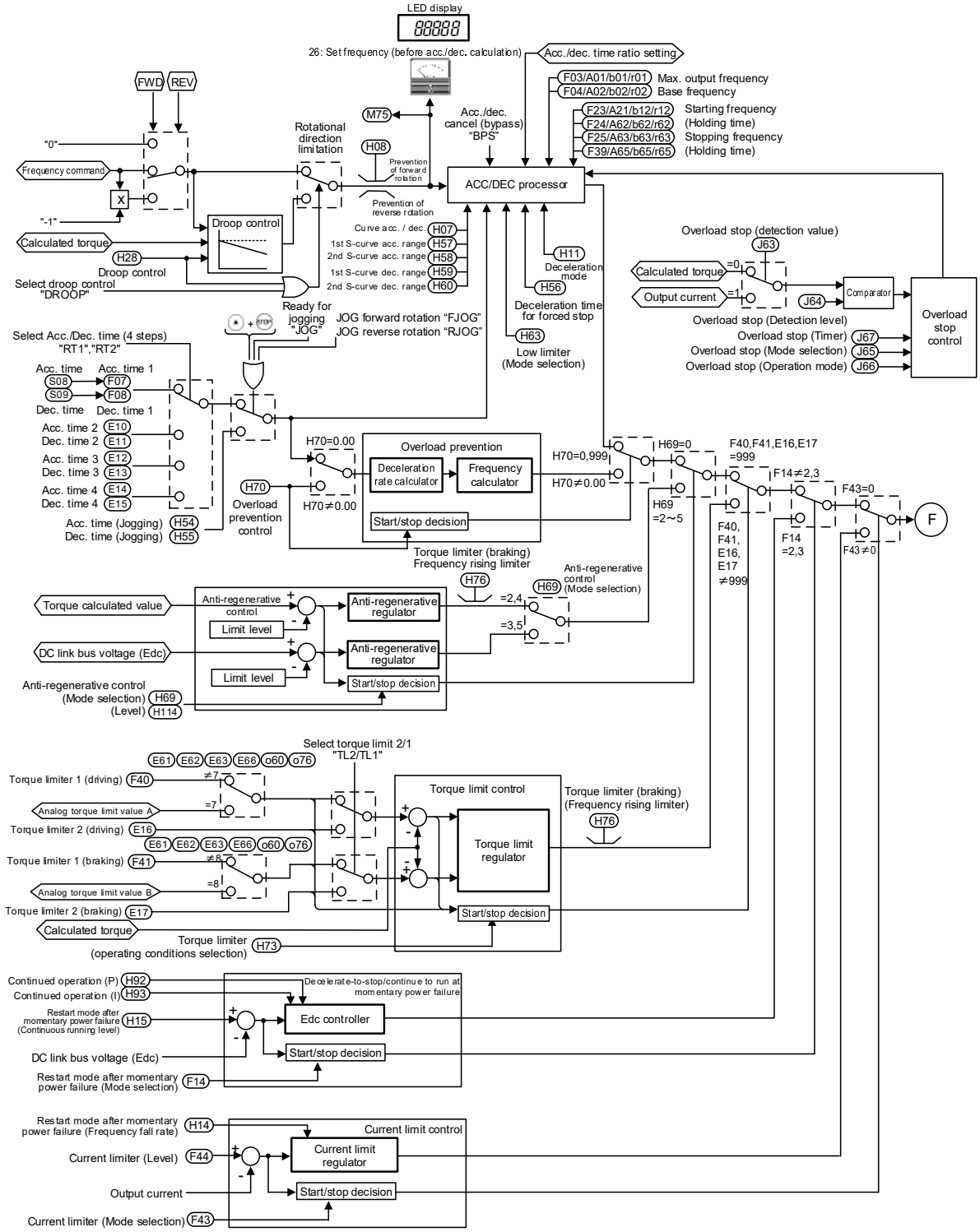

Fig. 8.9-1 V/f control (common) section block diagram

[2] Without speed sensor

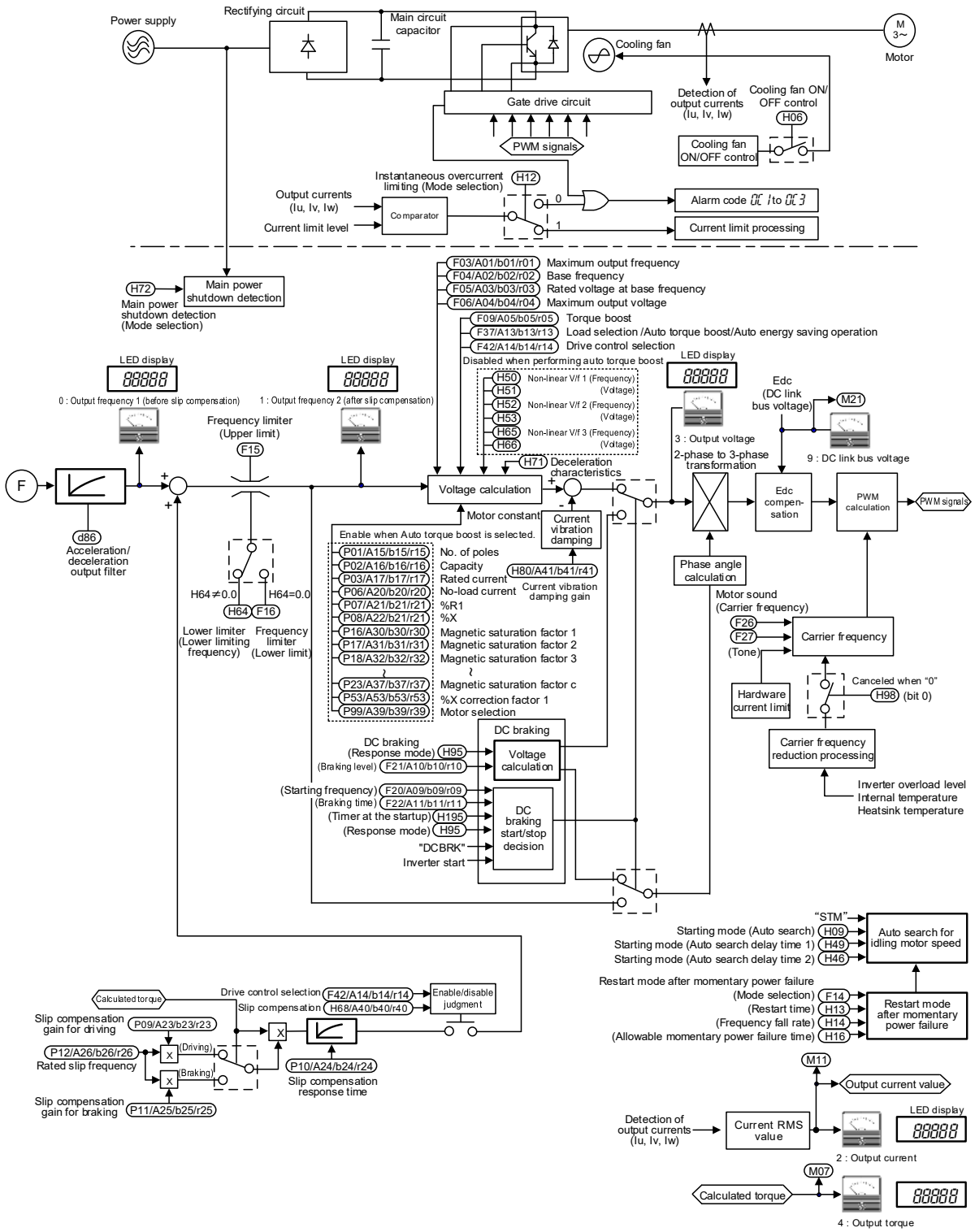

Fig. 8.9-2 V/f control (without speed feedback) section block diagram

[3] With speed sensor

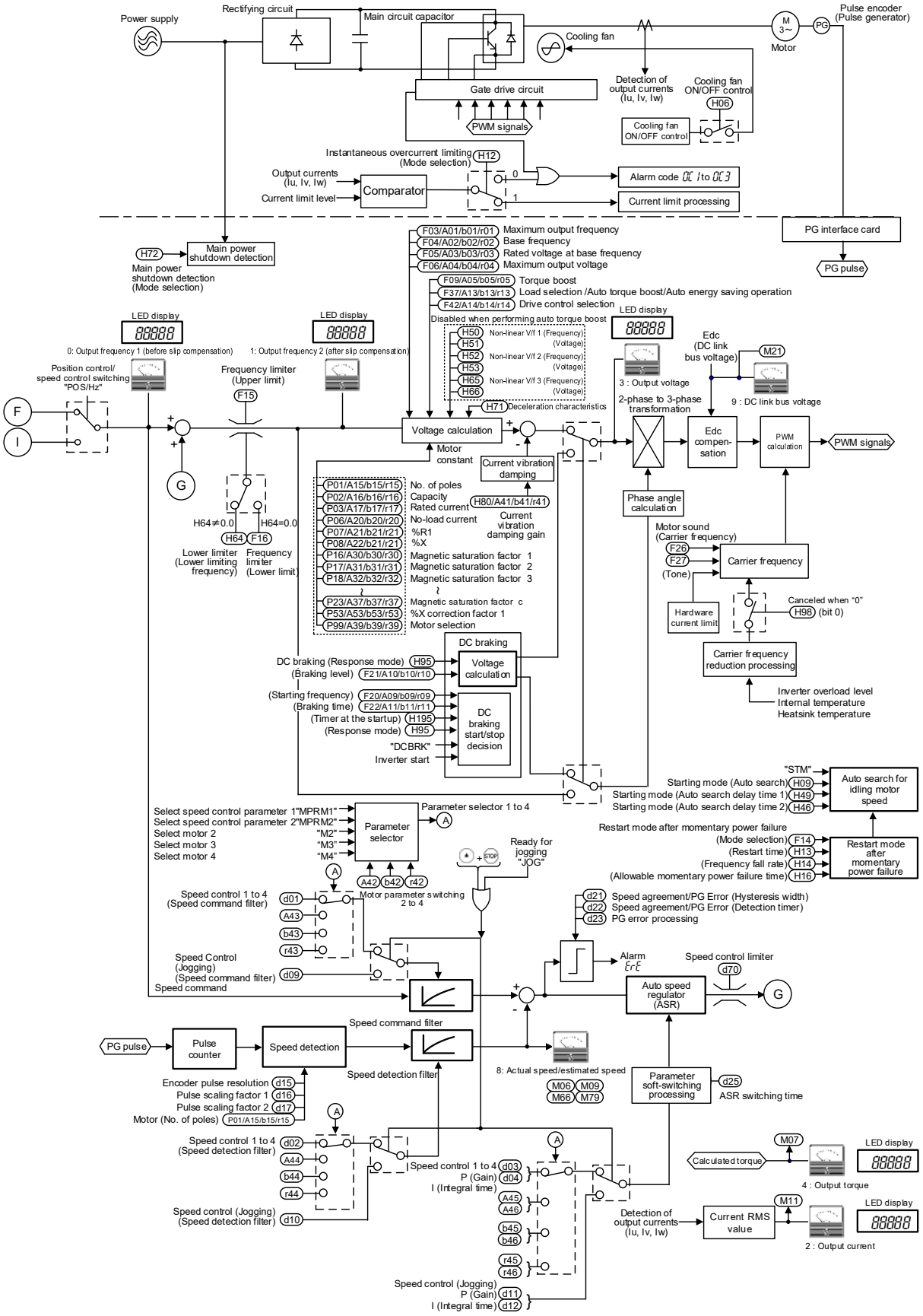

Fig. 8.9-3 V/f control (with speed feedback) section block diagram

8.9.2 Vector control

[1] Common

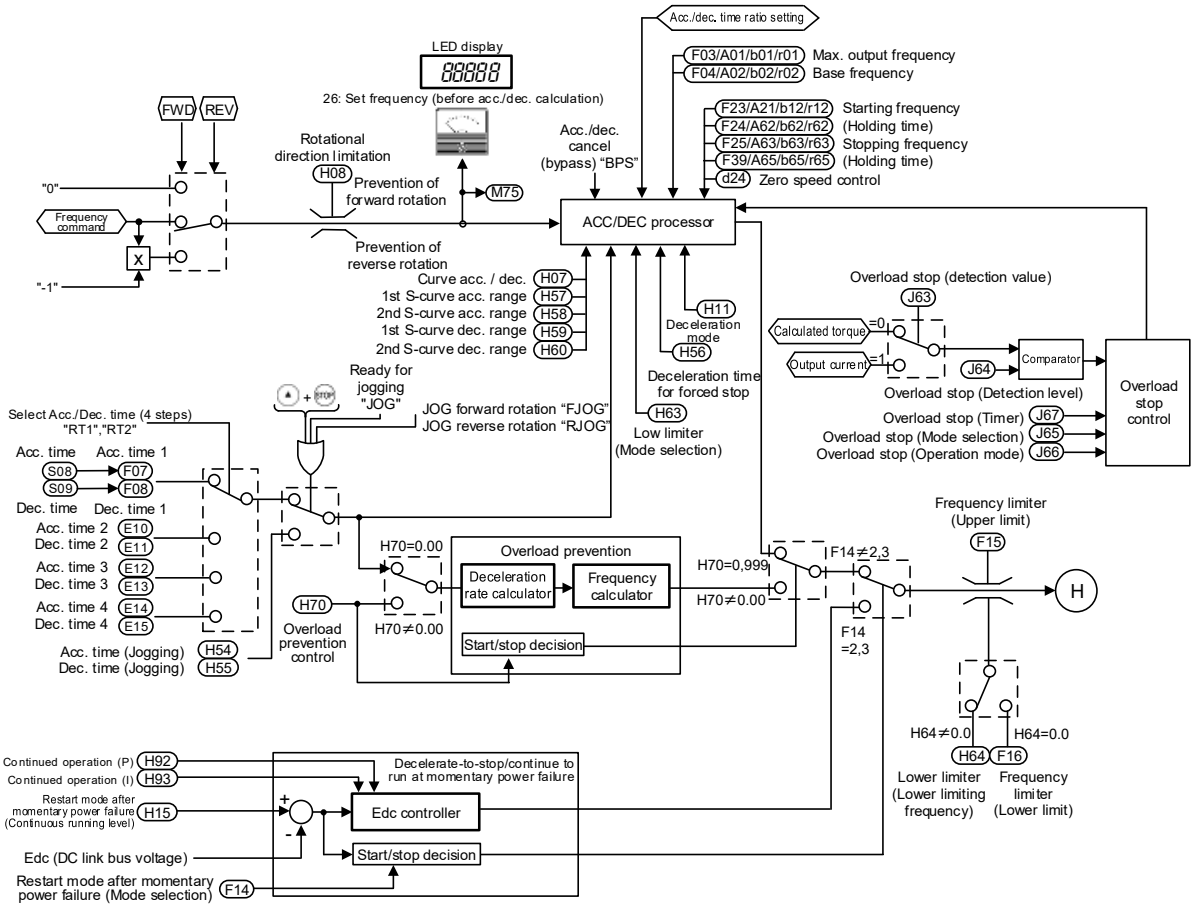

Fig. 8.9-4 Vector control (common) section block diagram

[2] Torque command / torque limit

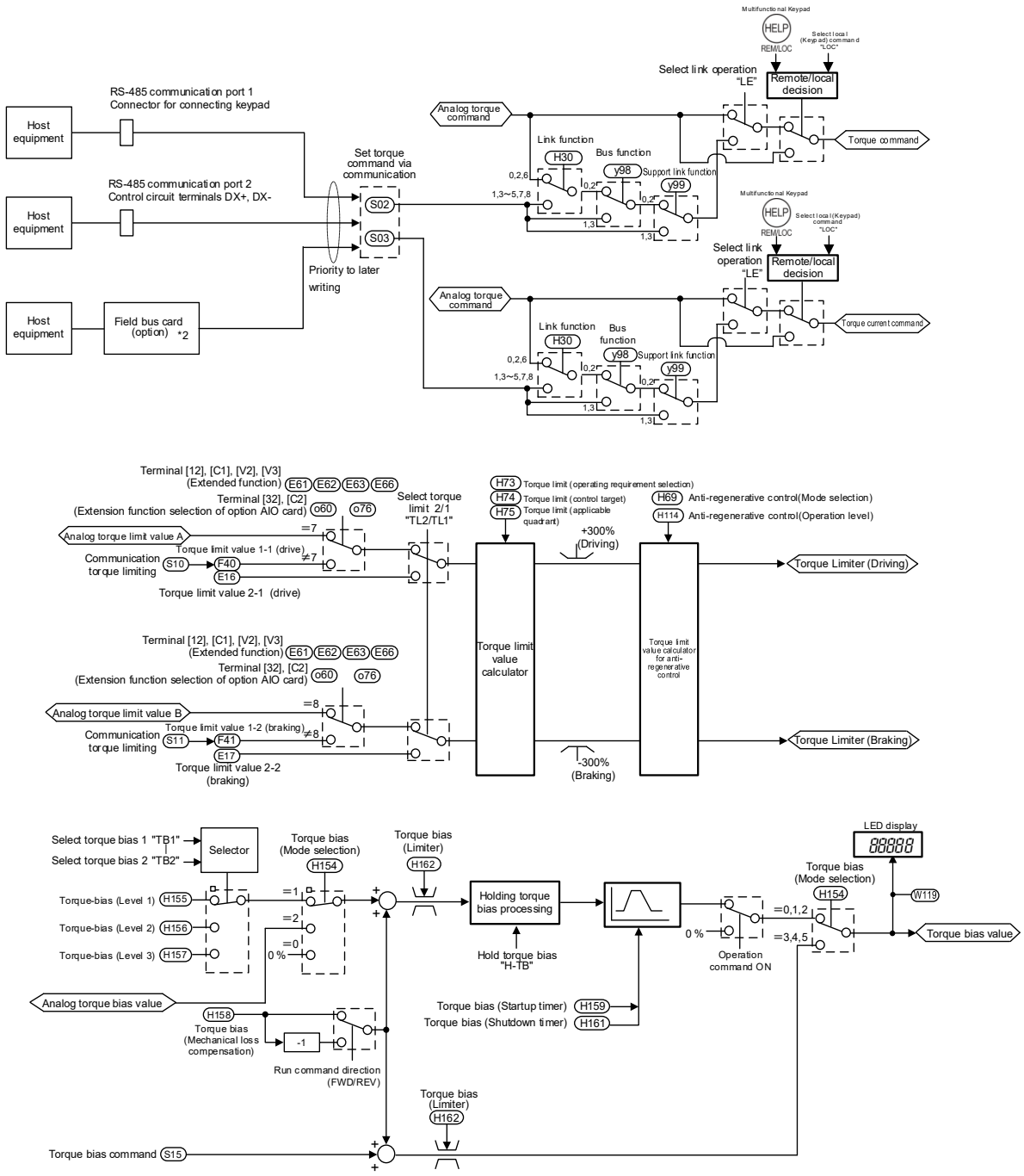

*2: Refer to the respective instruction manuals for details on each option.

Fig. 8.9-5 Vector control (torque command / torque limit) section block diagram

[3] Speed control / torque control

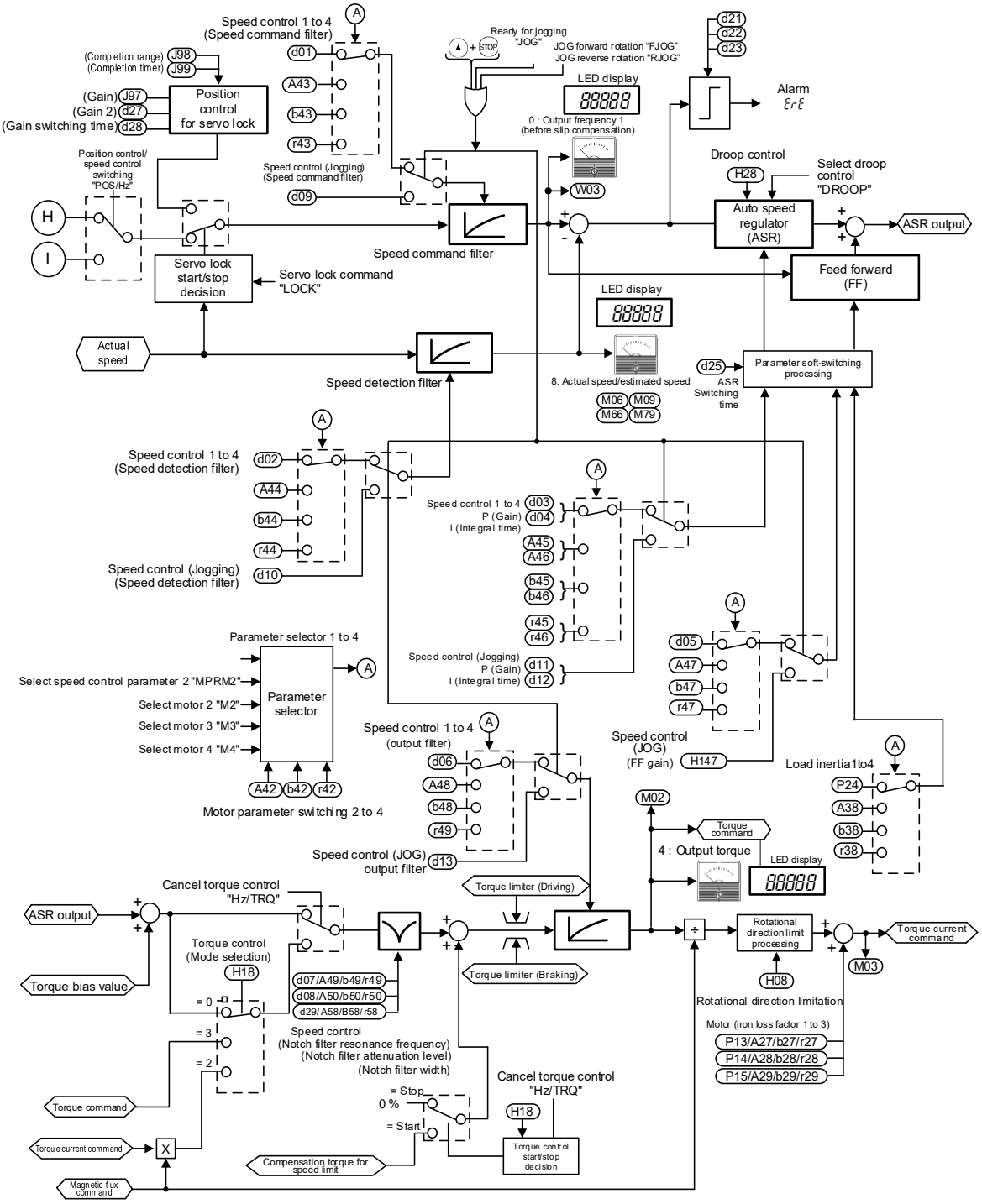

Fig. 8.9-6 Vector control (speed control / torque control) section block diagram

[4] Speed limit and over speed protection processing

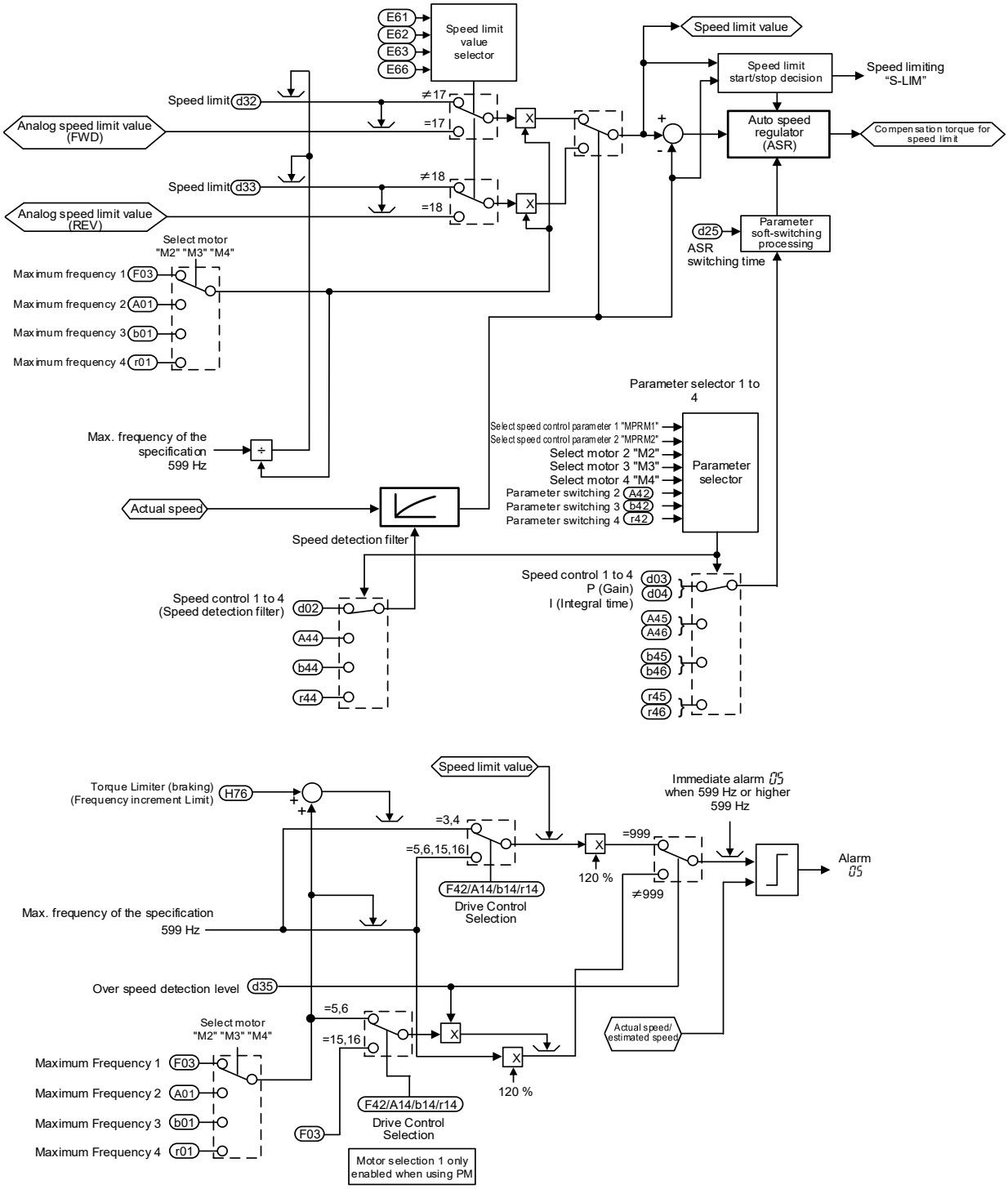

Fig. 8.9-7 Vector control (speed control / over speed protection processing) section block diagram

[5] Motor drive

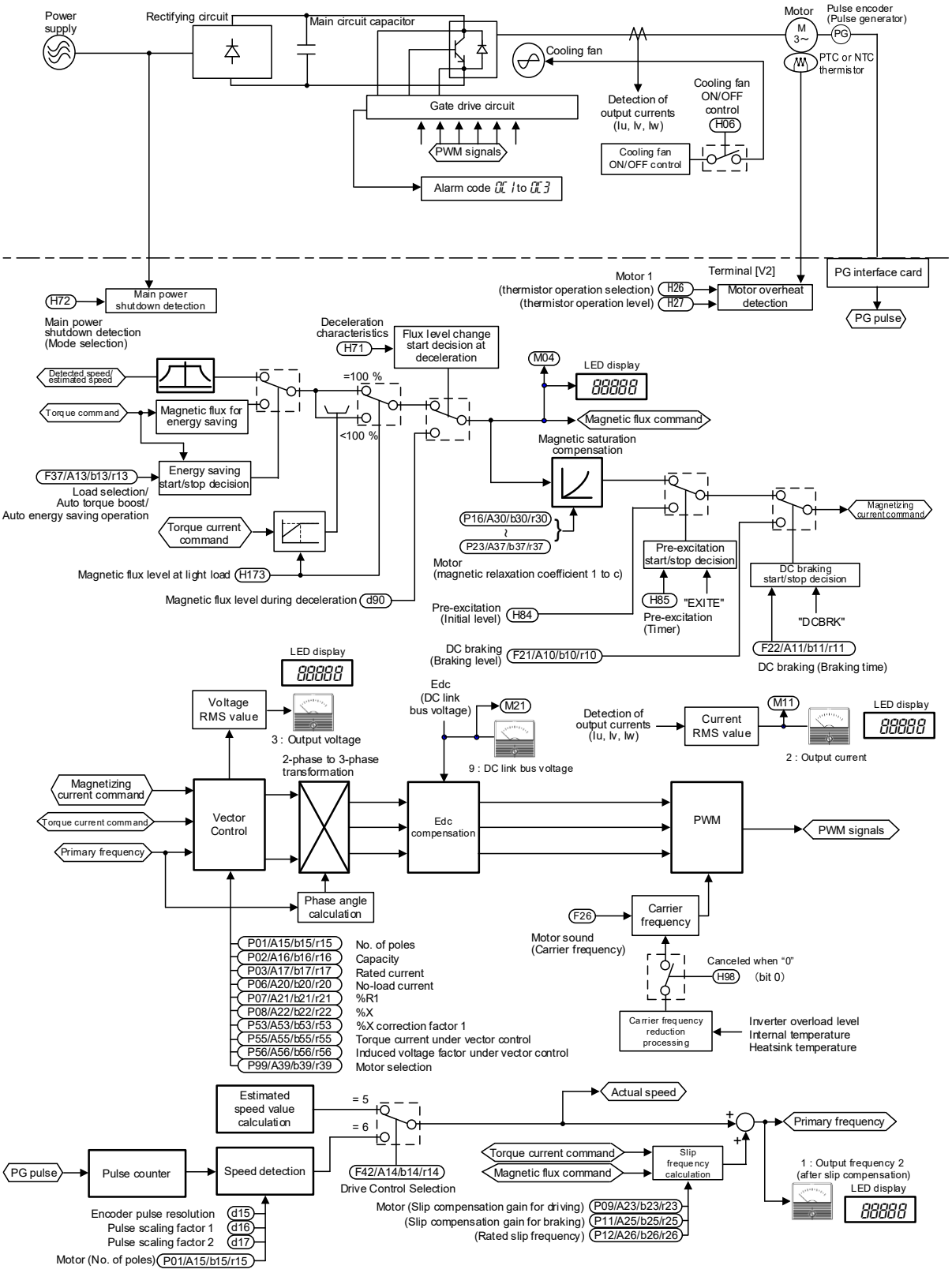

Fig. 8.9-8 Vector control (motor drive) section block diagram

[6] Vector control: Synchronous motor drive

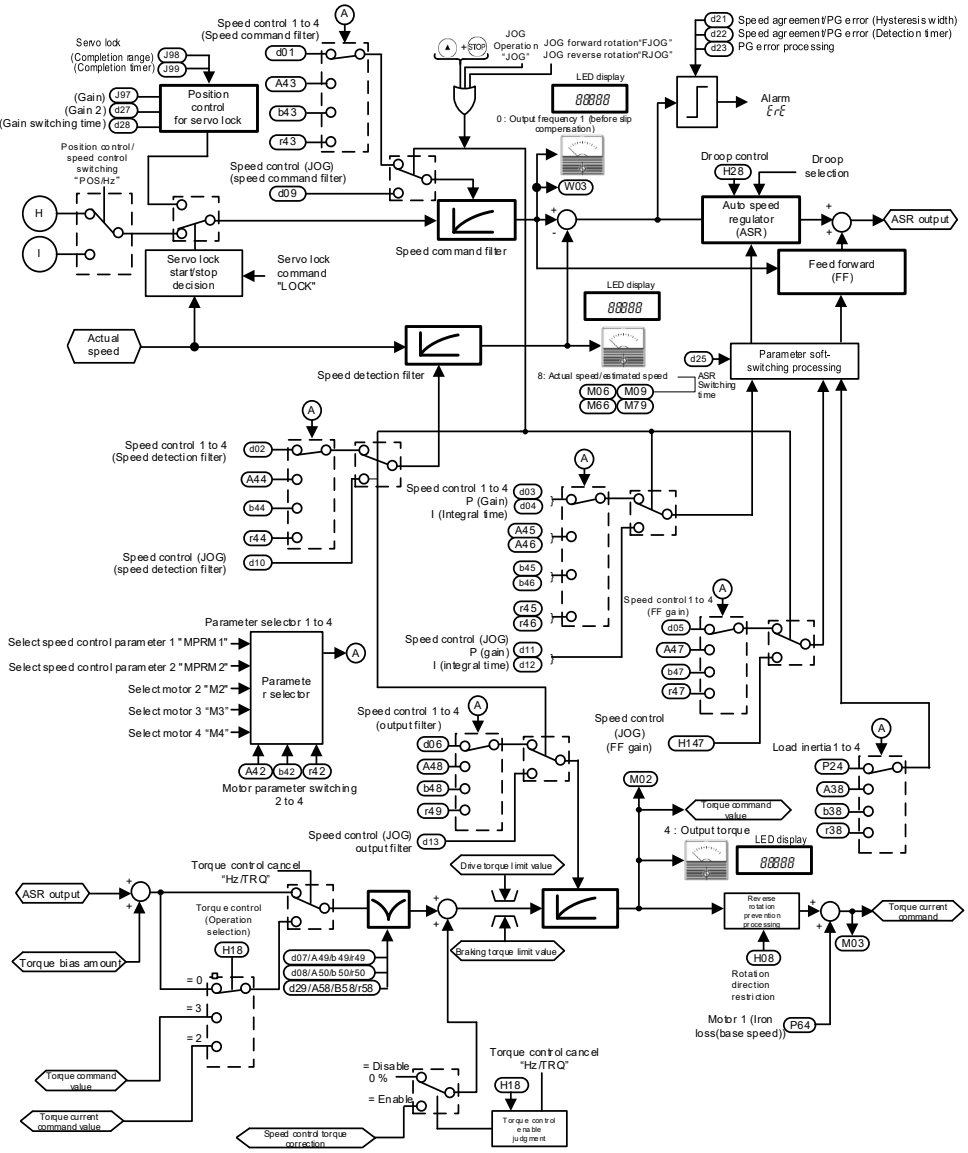

Fig. 8.9-9 Vector control (PMSM drive 1) section block diagram

[6] Vector control: Synchronous motor drive (continued)

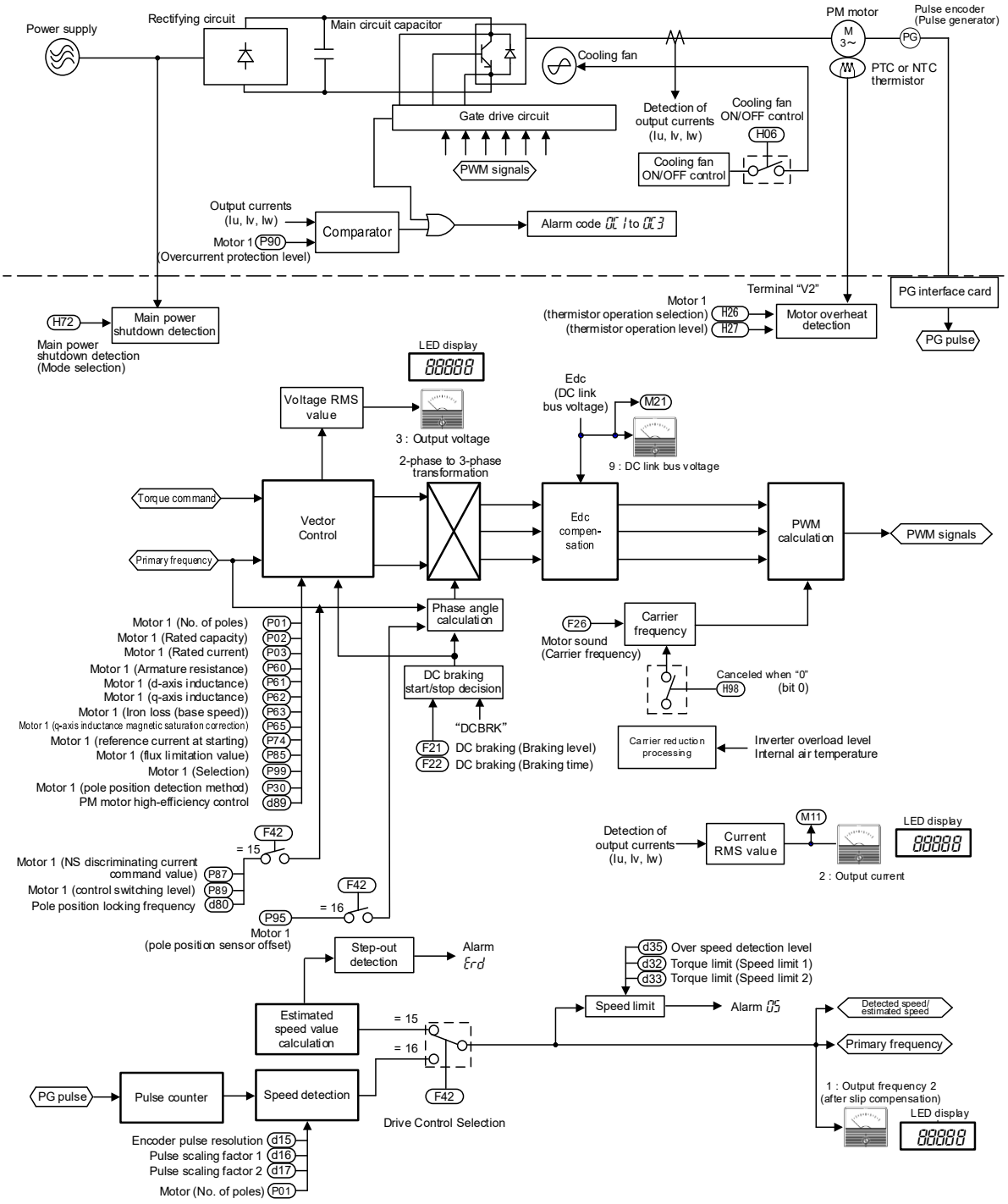

Fig. 8.9-10 Vector control (PMSM drive 2) section block diagram

8.10 FM Output Section

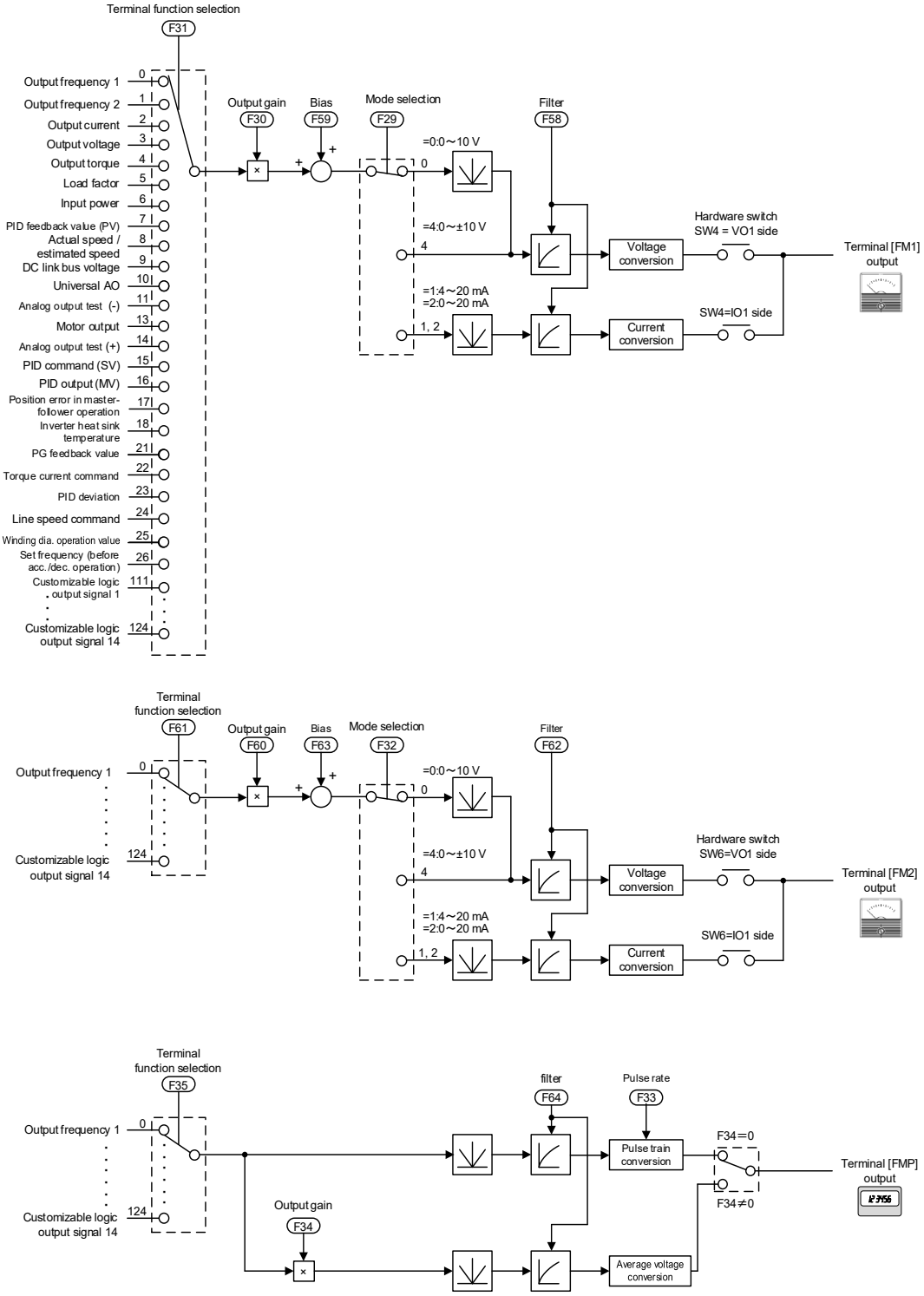

Fig. 8.10-1 FM output section block diagram

Chapter 9
COMMUNICATION FUNCTIONS

This chapter describes an overview of inverter operation through the RS-485 communications.
Refer to the "RS-485 Communication User's Manual" for details.

Contents

9.1 Overview of RS-485 Communication ····· 9-1
9.1.1 RS-485 common specifications ····· 9-2
9.1.2 RS-485 communication terminal specifications ····· 9-3
[1] RS-485 COM port 1 (RJ-45 connector for keypad connection) specification ····· 9-3
[2] RS-485 COM port 2 (terminal block) specifications ····· 9-3
9.1.3 Connection method ····· 9-4
9.1.4 RS-485 connection devices ····· 9-6
[1] Converter ····· 9-6
[2] Requirements for the cable (COM port 1: for RJ-45 connector) ····· 9-6
[3] Requirements for the cable (COM port 2: for RS-485 terminal block connection) ····· 9-6
[4] Branch adapter for multi-drop ····· 9-6
9.1.5 RS-485 noise suppression ····· 9-7
9.2 FRENIC Loader Overview ····· 9-8
9.2.1 Specifications ····· 9-8

9.1 Overview of RS-485 Communication

The FRENIC-MEGA has two RS-485 COM ports at the locations shown below.

(1) COM port 1: RJ-45 connector for keypad connection (modular jack)

(2) COM port 2: RS-485 terminals (control terminals [SD], [DX-], [DX+])

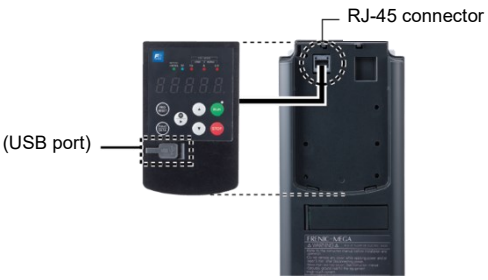

COM port 1

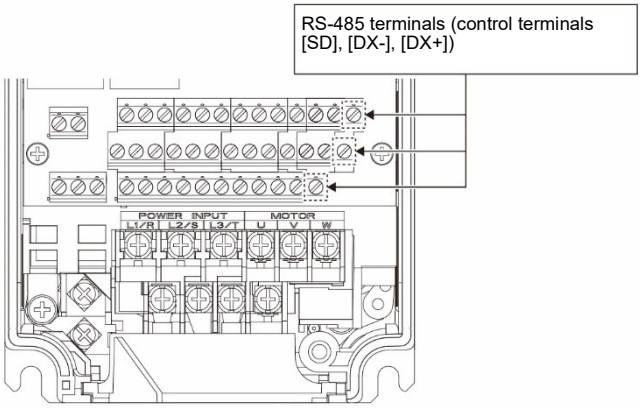

COM port 2

Using the RS-485 COM ports shown above enables the extended functions listed below.

- Remote operation from keypad (COM port 1)

  The standard keypad enables remote operation by mounting the keypad on a remote panel and connecting the keypad to RJ-45 connector with an extension cable. (maximum cable length: 20m (65.6ft))

- Operation by FRENIC Loader (COM ports 1 and 2)

  FRENIC Loader (see “9.2 FRENIC Loader Overview”) can also be used by connecting RS-485 communication port 1 or 2 to a computer using a USB converter.

  (FRENIC Loader can also be operated by connecting the USB port on the keypad directly with the USB port on a PC.)

- Control via host equipment (COM ports 1 and 2)

  Connecting the inverter to the host equipment (upper controller), such as a computer and programmable controller (PLC), enables to control the inverter as a subordinate device.

  In addition to the COM port (RJ-45 connector) shared with the keypad, FRENIC-MEGA is also equipped with an RS-485 terminal as standard.

  The protocols for controlling inverters support the Modbus RTU protocol, BACnet MS/TP, Metasys N2 that is widely used and the Fuji Electric’s general-purpose inverter protocol that is common to Fuji Electric’s inverters including conventional series.

Note

- Connecting the keypad to COM port 1 automatically switches to the keypad protocol; there is no need to change the function code setting.
- Use is only possible with either BACnet MS/TP or Metasys N2.
  Refer to Chapter 5 “Description of Function Codes (5.3.20 y codes (Link functions) Protocol Selection (y10, y20))” for details.
- In the case of FRENIC Loader, Modbus RTU protocol is used.
  For details, refer to the “FRENIC Loader Instruction Manual”.

For details of RS-485 communication, refer to the RS-485 Communication User’s Manual.

9.1.1 RS-485 common specifications

Table 9.1-1

Item	Specification			
Protocol	FGI-BUS	Modbus RTU	BACnet MS/TP *101	Metasys N2 *101
Compliance	Fuji general-purpose inverter protocol	Modicon Modbus RTU-compliant (only in RTU mode)	ASHRAE/ANSI/ISO-compliant	Johnson Controls Metasys N2 protocol
Connection quantity	Host device: 1, Inverters: Up to 31			
Electrical specification	EIA RS-485			
Connection to RS-485	RJ-45 connector or terminal block			
Synchronization	Start-stop synchronization			
Communication system	Half-duplex			
Baud rate (bps)	2400, 4800, 9600, 19200, 38400, 57600, 76800 and 115200 bps		9600, 19200, 38400, 76800 bps	9600 bps
Max. transmission cable length	500 m (1640 ft)			
Station No.	1 to 31	1 to 247	0 to 127	0 to 255
Message frame format	FGI-BUS	Modbus RTU	MS/TP frame format	Metasys N2
Frame synchronization	Header character detection (SOH)	Detection of no-data time (for 3 characters period)	Header 2characters (preamble) detection (0x55,0xFF)	Header character detection (start code:$3E_H$)
Frame length	Standard transmission: 16 bytes (fixed) High-speed transmission: 8 or 12 bytes	Variable length	Variable length	Variable length
Max. transfer data	Write: 1 words Read: 1 words	Write: 100 words Read: 100 words	Write: 50 words Read: 50 words	Write: 1 words Read: 1 words
Messaging system	Polling/selecting/broadcast			Polling/selecting
Transmission character format	ASCII	Binary	Binary *String readout data: ASCII	ASCII
Character length	8 or 7 bits Selectable with function code	8 bit (fixed)	8 bit (fixed)	8 bit (fixed)
Parity	Even, Odd, or None (selectable with function code)		None	None
Stop bit length	1 or 2 bits Selectable with function code	No parity: 2 bits/1 bit Parity: 1 bit Select by parity setting.	1 bit (fixed)	1 bit (fixed)
Error checking	Check sum	CRC-16	CRC	Check sum

*101 Supported with ROM0500 or later.

9.1.2 RS-485 communication terminal specifications

[1] RS-485 COM port 1 (RJ-45 connector for keypad connection) specification

The keypad port is an RJ-45 connector, and the pin assignment is as follows.

Table 9.1-2

Pin	Signal name	Content	Remarks
1, 8	Vcc	Power supply for keypad	5 V
2, 7	GND	Reference potential	GND
3, 6	NC	Vacant terminal	-
4	DX-	RS-485 communication data (-)	Built-in 110 Ω terminating resistor Open/close with SW3*
5	DX+	RS-485 communication data (+)	

* Refer to Chapter 2 “2.2.7 Switching switches” for details on SW3.

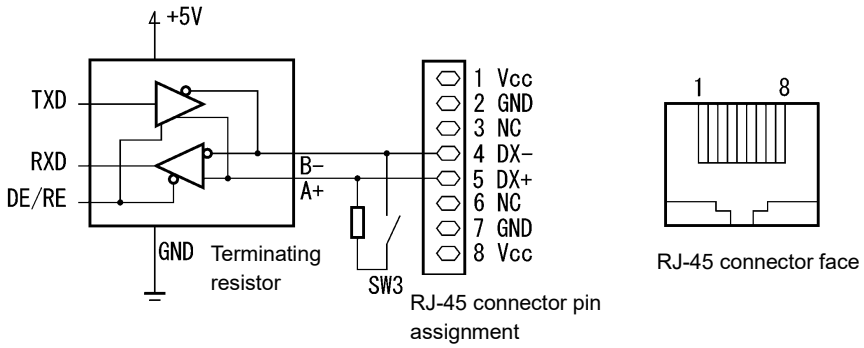

Note The power supply for the keypad (pins 1, 2, 7, and 8) is connected to the RJ-45 connector for RS-485 communication (standard). When connecting other devices to the RJ-45 connector, take care not to use those pins. Use pins **4 and 5 only**.

[2] RS-485 COM port 2 (terminal block) specifications

FRENIC-MEGA is equipped with an RS-485 communication terminal for the control terminals. Details of each terminal are given below.

Table 9.1-3

Terminal symbol	Content	Remarks
[SD]	Shield terminal	
[DX-]	RS-485 communication data (-)	Built-in 110 Ω terminating resistor Open/close with SW2*
[DX+]	RS-485 communication data (+)	

* Refer to Chapter 2 “2.2.7 Switching switches” for details on SW2.

9.1.3 Connection method

- Up to 31 inverters can be connected to one host equipment.
- The protocol is commonly used in the FRENIC series of general-purpose inverters, so programs for similar host equipment can run/stop the inverter.
  (The parameters modes may differ depending on the equipment.)
- Fixed-length transmission frames facilitate developing communication control programs for hosts.

For details on RS-485 communication, refer to the “RS-485 Communication User’s Manual”.

Multi-drop connection using the RS-485 COM port 1 (for connecting the keypad)

For connecting inverters in multi-drop connection, use the branch adapters for multi-drop connection as shown below.

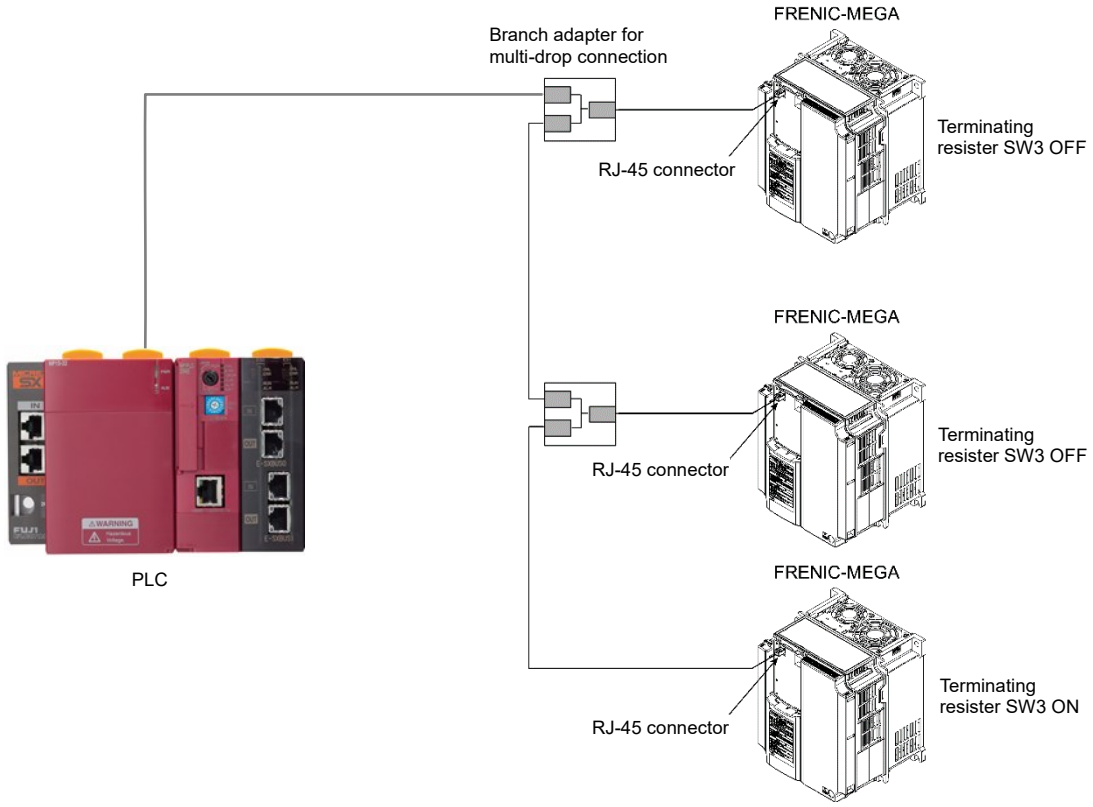

Fig. 9.1-1 Multi-drop connection diagram (RJ-45 connector connection)

Note

- The power supply for keypad is available in the RJ-45 connector for RS-485 communication (COM port 1) (pins 1, 2, 7, and 8). When connecting other devices to the RJ-45 connector, take care not to use those pins. Use pins **4 and 5 only**. (See 9.1.2 RS-485 communication terminal specifications.)
- When selecting additional devices to prevent the damage or malfunction of the control PCB caused by external noises or eliminate the influence of common mode noises, be sure to see “9.1.4 RS-485 connection devices.”
- The maximum wiring length must be 500 m (1640 ft).
- Use the cables and converters meeting the modes for connecting the RS-485 COM ports. (Refer to “[2] Requirements for the cable (COM port 1: for RJ-45 connector)” in “9.1.4 RS-485 connection devices”.)

Multi-drop connection using the RS-485 COM port 2 (terminal block)

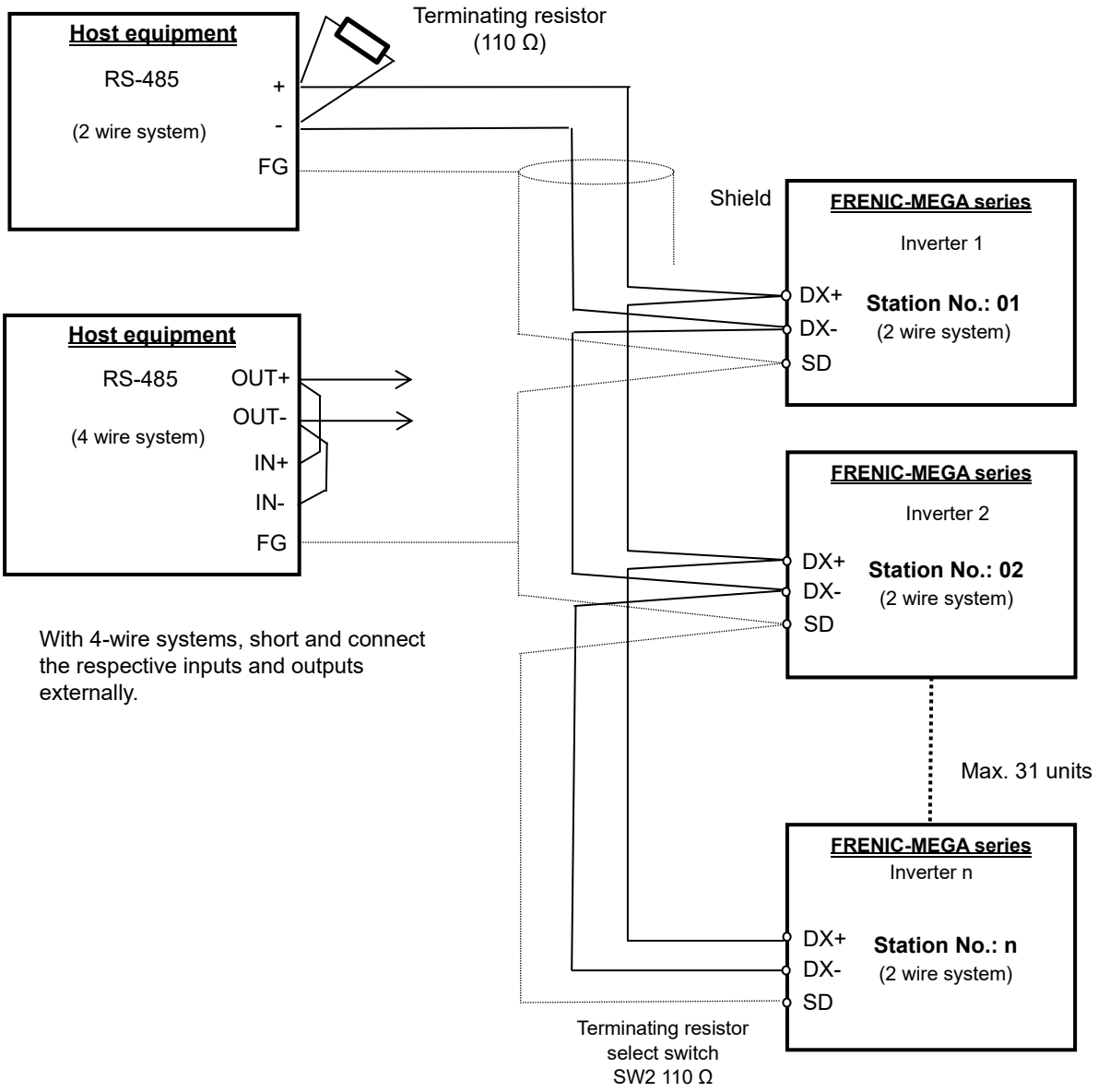

Fig. 9.1-2 Multi-drop connection diagram (terminal block connection)

Note Use the cables and converters meeting the modes for connecting the RS-485 COM ports.
(Refer to “[3] Requirements for the cable (COM port 2: for RS-485 terminal block connection)" in “9.1.4 RS-485 connection devices".)

9.1.4 RS-485 connection devices

This section describes the devices required for connecting the inverter to a PC having no RS-485 interface or for connecting two or more inverters in multi-drop network.

[1] Converter

PCs are generally not equipped with an RS-485 port. Therefore, an RS-232C - RS-485 converter or USB - RS-485 converter is required. To use the equipment properly, be sure to use the converter which meets the mode below. Be careful that a converter not recommended may not work properly.

Requirements for recommended converters

Send/receive switching system	: Auto-switching by monitoring the transmission data at PC (RS-232C)
Electric isolation	: Electrically isolated from the RS-485 port
Fail-safe	: Fail-safe facility*
Other requirements	: Superior noise immunity

*: The fail-safe function refers to a feature that ensures the RS-485 receiver's output is at "logic high" even if the RS-485 receiver's input is opened or short-circuited or all the RS-485 drivers are inactive.

Recommended converters

System Sacom Sales Corporation (Japan): KS-485PTI (RS-232C - RS-485 converter)
: USB-485I RJ-45-T4P (USB - RS-485 converter)

[2] Requirements for the cable (COM port 1: for RJ-45 connector)

Use a standard LAN cable (straight 10BASE-T/100BASE-TX cable which satisfies US ANSI/TIA/EIA-568A category 5 standard or higher).

Note The power supply for the keypad is available in the RJ-45 connector for RS-485 communication (COM port 1) (pins 1, 2, 7 and 8). When connecting other devices to the RJ-45 connector, take care not to use those pins. Use pins **4 and 5 only**.

[3] Requirements for the cable (COM port 2: for RS-485 terminal block connection)

Use a twisted-pair cable (AWG16 to 26) for long distance transmission for the connection cable to ensure a reliable connection.

[4] Branch adapter for multi-drop

The RJ-45 connector is used as the communication connector. To use a standard LAN cable for multi-drop connection, use the branch adapter for the RJ-45 connector.

Recommended branch adapter

SK Koki (Japan): MS8-BA-JJJ

9.1.5 RS-485 noise suppression

Depending on the operating environment, the malfunction may occur due to the noise generated by the inverter. Possible measures to prevent such malfunction are: separating the wiring, use of shielded cable, isolating the power supply, and adding an inductance component. The description shown below is an example of adding an inductance.

Refer to the RS-485 Communication User's Manual, Chapter 2, Section 2.2.4 "Precautions for long wiring (between inverter and motor)" for details.

Adding inductance components

Keep the impedance of the signal circuit high against the high-frequency noises by inserting an inductance component, such as by inserting a choke coil in series or passing the signal line through a ferrite core.

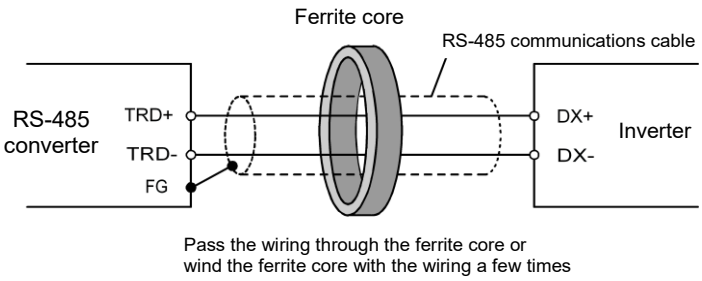

Fig. 9.1-3 Adding an inductance component

9.2 FRENIC Loader Overview

By connecting the inverter with a PC, FRENIC Loader allows users to edit, set, and manage inverter function codes, monitor running data, carry out remote operations such as running and stopping, and monitor data such as the running status and alarm history. FRENIC Loader is also equipped with built-in functions which allow users to create logic circuits for the inverter customizable logic function, and to write data to the inverter.

This software can be downloaded and used free of charge from the Fuji Electric website.

For details, refer to the FRENIC Loader Instruction Manual.

9.2.1 Specifications

Table 9.2-1

Item		Specification	Remarks
Name		Inverter support loader (FRENIC Loader4)	Compatible with Version 1.1.0.0 or later
Compatible inverters		FRENIC-MEGA/HVAC/AQUA/Ace/eFIT/Multi/Eco/Mini	
Number of connected inverters		USB connection: 1 unit RS-485 connection: Up to 31 units	
Recommended cable		Cable (10BASE-T or higher) compliant with EIA-568A RJ-45 connector	In the case of RS-485 connection
Operating environment	OS	Microsoft Windows 10 (32-bit, 64-bit) Microsoft Windows 11 (64-bit)	
	Memory	2 GB or more RAM	4 GB or more recommended.
	Hard disk	800 MB or more of available capacity recommended.	
	COM port	RS-232C (conversion to RS-485 communication is required to connect inverters) or USB	
	Monitor	1024 ×768 or higher resolution	FHD (1920×1080) or more monitor is recommended.
Function	Function code setting	• Reading function codes from inverter • Function code editing, data management • Writing function codes to inverter • Auto tuning operation	
	Run monitor	• Inverter I/O signal status check • Maintenance information, alarm information check • Operating status monitor	
	Real-time trace function	• Inverter I/O signals, changes in the operating status time axis can be monitored.	Display scale: 20 ms/div to 10 min/div
	Historical trace function	• Inverter I/O signals, changes in the operating status time axis can be recorded inside the inverter, allowing the status to be checked with a signal (trigger) as the starting point.	Display scale: 1 ms/div to 60 min/div
	Test run function	• An inverter test run can be carried out from the PC Loader screen.	
	Scheduled operation	• Timer operating condition settings for models with built-in real-time clock	Combination with Multi-function keypad TP-A2SW is required.
	Customizable logic	• Logic circuit creation • Writing to inverter • Debug function using on-line monitor	
	Traceback function	Data specified before or after the occurrence of triggers such as alarms is automatically stored in the keypad memory, allowing data to be acquired and waveforms to be displayed at FRENIC Loader. • Data for a single event is stored with the standard keypad. • Data for 100 events is stored with the multi-function keypad (when microSD memory card installed).	The output frequency, output current, intermediate DC voltage, and signals for terminals Y1 to Y5 from 2 seconds before to 0.5 seconds after the last alarm occurred are stored by factory default. The multi-function keypad (TP-A2SW) is an option. The microSD memory card is sold separately.

Chapter 10
SELECTING OPTIMAL MOTOR AND INVERTER CAPACITIES

This chapter provides you with information about the inverter output torque characteristics, capacity selection procedure, and equations for calculating capacities to help you select optimal motor and inverter models. It also helps to select the braking resistors, inverter specification (HHD/HND/HD/ND), and motor drive control.

Contents

10.1 Motor Output Torque Characteristics ····· 10-1
10.2 Selection Procedure ····· 10-3
10.3 Equations for Selections ····· 10-6
10.3.1 Load torque during constant speed running ····· 10-6
[1] General equation ····· 10-6
[2] Obtaining the required force F ····· 10-6
10.3.2 Acceleration and deceleration time calculation ····· 10-8
[1] Calculation of moment of inertia ····· 10-8
[2] Calculation of the acceleration time ····· 10-10
[3] Calculation of the deceleration time ····· 10-11
[4] Calculating non-linear acceleration/deceleration time ····· 10-11
[5] Calculating non-linear deceleration time ····· 10-12
10.3.3 Heat energy calculation of braking resistor ····· 10-13
[1] Calculation of regenerative energy ····· 10-13
10.3.4 Calculating the RMS rating of the motor ····· 10-14
10.4 Selecting the Inverter Rating Specification (HHD/HND/HD/ND) ····· 10-15
10.4.1 Precautions in making the selection ····· 10-15
10.4.2 Guideline for selecting inverter specification and capacity ····· 10-16

When selecting a general-purpose inverter, select the motor, followed by the inverter.

(1) Key point for selecting a motor: Determine what kind of load machine is to be used, calculate its moment of inertia, and then select the appropriate motor capacity.

(2) Key point for selecting an inverter: Taking into account the operation requirements (e.g., acceleration time, deceleration time, and frequency in operation) of the load machine to be driven by the motor selected in (1) above, calculate the acceleration/deceleration/braking torque.

This section describes the selection procedure for (1) and (2) above. First, it explains the output torque characteristics obtained by using the motor driven by the inverter (FRENIC-MEGA).

10.1 Motor Output Torque Characteristics

Fig. 10.1-1 and Fig. 10.1-2 graph the output torque characteristics of motors versus the output frequency for 50 Hz and 60 Hz base frequencies. The horizontal and vertical axes show the output frequency and output torque (%), respectively. Curves (a) through (f) depend on the running conditions.

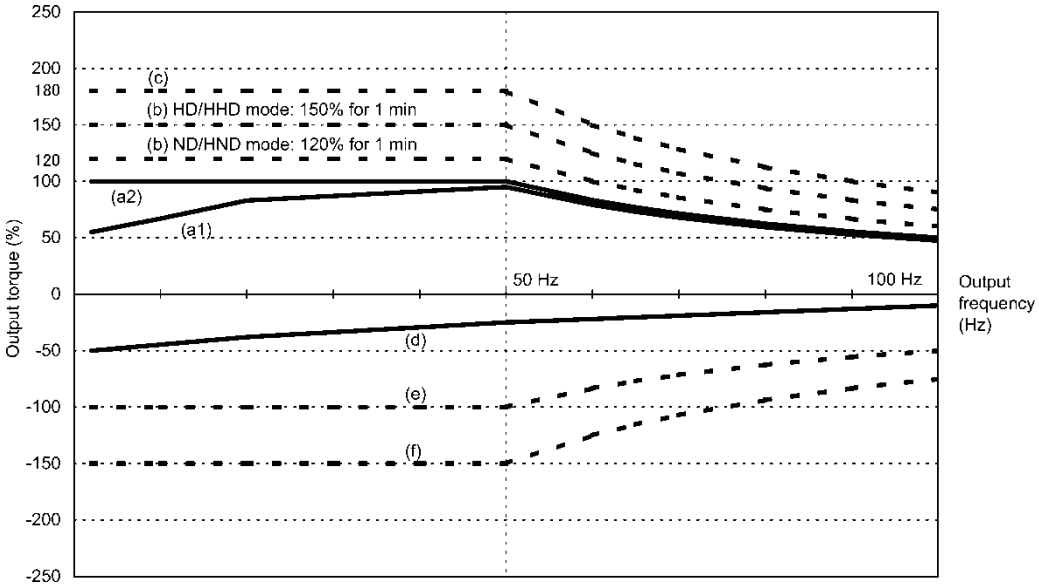

Fig. 10.1-1 Output torque characteristics (base frequency: 50 Hz)

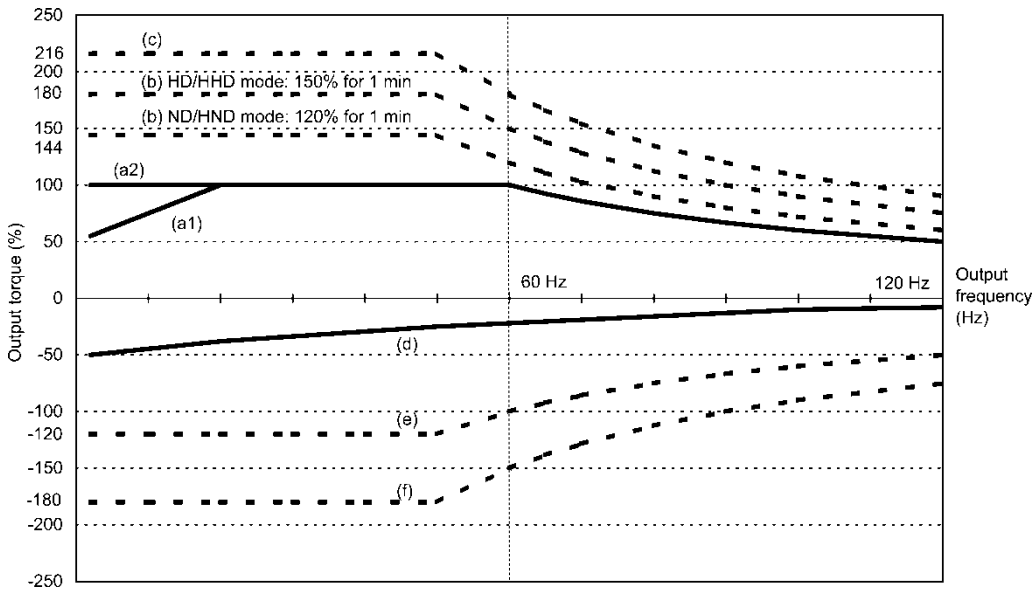

Fig. 10.1-2 Output torque characteristics (base frequency: 60 Hz)

(1) Continuous allowable driving torque

1) Standard motor (Curve (a1) in Fig. 10.1-1 and Figure Fig. 10.1-2)

   Curve (a1) shows the torque characteristic that can be obtained in the range of the inverter continuous rated current, where the standard motor's cooling characteristic is taken into consideration. When the motor runs at the base frequency of 60 Hz, 100 % output torque can be obtained; at 50 Hz, the output torque is somewhat lower than that in commercial power, and it further lowers at lower frequencies. The reduction of the output torque at 50 Hz is due to increased loss by inverter driving, and that at lower frequencies is mainly due to heat generation caused by the decreased ventilation performance of the motor cooling fan.

2) Motor exclusively designed for vector control (Curve (a2) in Fig. 10.1-1 and Fig. 10.1-2)

   Curve (a2) shows the torque characteristic that can be obtained in the range of the inverter continuous rated current, where the motor exclusively designed for vector control is connected. In the motor exclusively designed for vector control, the attached forced-cooling fan reduces heat generation from the motor, so that the torque does not drop in the low-speed range, compared to the standard motor.

(2) Maximum driving torque in a short time (Curves (b) and (c) in Fig. 10.1-1 and Fig. 10.1-2)

Curve (b) shows the torque characteristic that can be obtained in the range of the inverter overload capability in a short time (HHD specification: 150% for 1 minute, 200% for 3 seconds, HD specification: 150% for 1 minute, HND/ND specification: 120% for 1 minute) when torque-vector control is enabled. At that time, the motor cooling characteristics have little effect on the output torque.

Curve (c) shows an example of the torque characteristic when one class higher capacity inverter is used to increase the short-time maximum torque. In this case, the short-time torque is 20 to 30 % greater than that when the standard capacity inverter is used.

(3) Starting torque (around the output frequency 0 Hz in Fig. 10.1-1 and Fig. 10.1-2)

The maximum torque in a short time applies to the starting torque as it is.

(4) Braking torque (Curves (d), (e), and (f) in Fig. 10.1-1 and Fig. 10.1-2)

In braking the motor, kinetic energy is converted to electrical energy and regenerated to the DC link bus capacitor (reservoir capacitor) of the inverter. Discharging this electrical energy to the braking resistor produces a large braking torque as shown in curve (e). If no braking resistor is provided, however, only the motor and inverter losses consume the regenerated braking energy so that the torque becomes smaller as shown in curve (d).

When an optional braking resistor is used, the braking torque is allowable only for a short time. Its time ratings are mainly determined by the braking resistor ratings. This manual and associated catalogs list the allowable values (kW) obtained from the average discharging loss and allowable values (kWs) obtained from the discharging capability that can be discharged at one time.

Note that the torque % value varies according to the inverter capacity.

Selecting an optimal brake unit enables a braking torque value to be selected comparatively freely in the range below the short-time maximum torque in the driving mode, as shown in curve (f).

For braking-related values when the inverter and braking resistor are normally combined, refer to Chapter 11 “11.6 Braking Resistors (DB) and Braking Units”.

10.2 Selection Procedure

Fig. 10.2-1 Selection procedure shows the general selection procedure for optimal inverters. Items numbered (1) through (5) are described on the following pages.

You may easily select inverter capacity if there are no restrictions on acceleration and deceleration times. If “there are any restrictions on acceleration or deceleration time” or “acceleration and deceleration are frequent,” then the selection procedure is more complex.

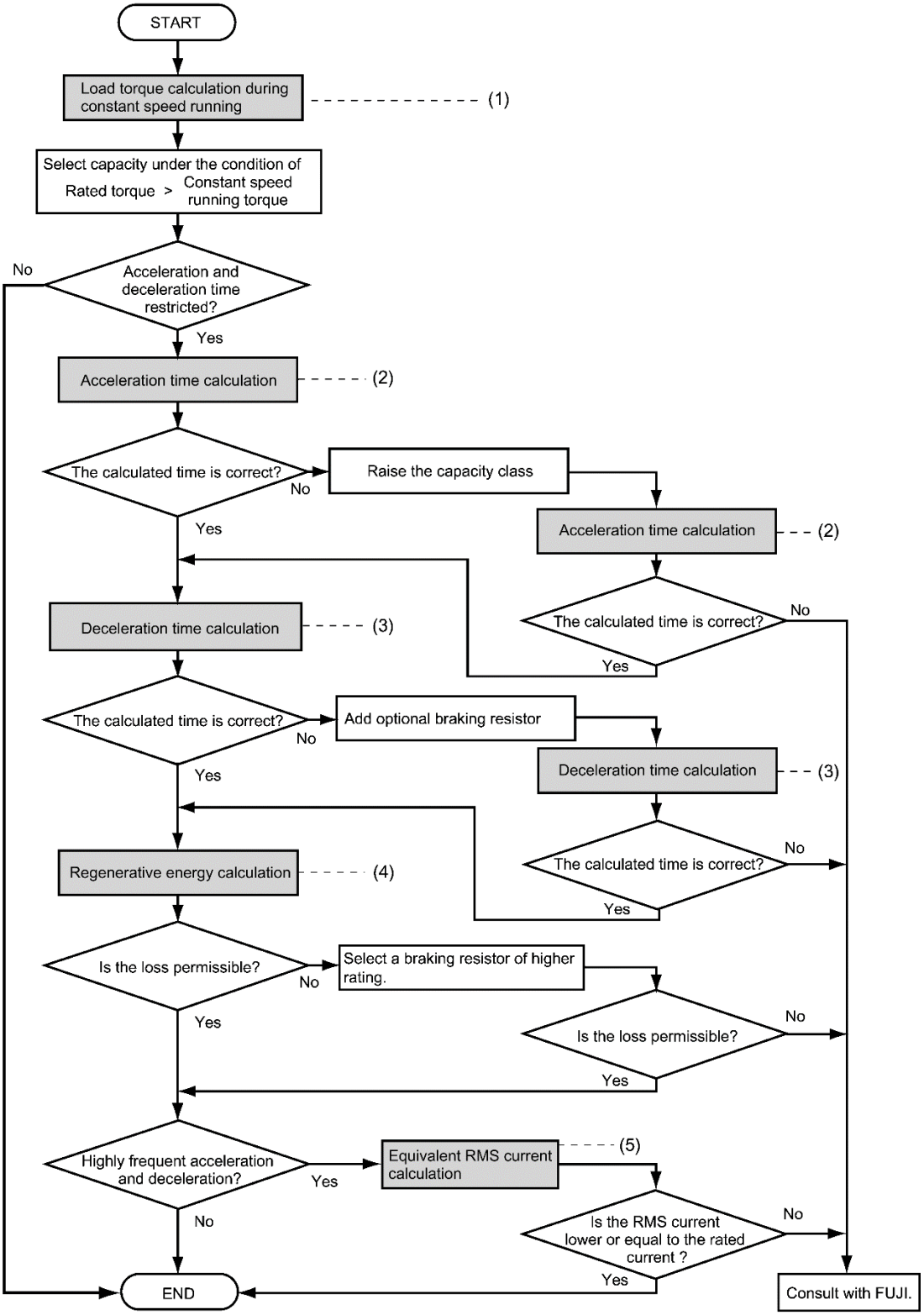

Fig. 10.2-1 Selection procedure

(1) Calculating the load torque during constant speed running (For detailed calculation, refer to section 10.3.1)

It is essential to calculate the load torque during constant speed running for all loads.

First calculate the load torque of the motor during constant speed running and then select a tentative capacity so that the continuous rated torque of the motor during constant speed running becomes higher than the load torque. To perform capacity selection efficiently, it is necessary to match the rated speeds (base speeds) of the motor and load. To do this, select an appropriate reduction-gear (mechanical transmission) ratio and the number of motor poles.

If the acceleration or deceleration time is not restricted, the tentative capacity can apply as a defined capacity.

(2) Calculating the acceleration time (For detailed calculation, refer to section 10.3.2 [2])

When there are some specified requirements for the acceleration time, calculate it according to the following procedure:

1) Calculate the **moment of inertia** for the load and motor.

   Calculate the moment of inertia for the load, referring to “10.3.2 Acceleration and deceleration time calculation.” For the moment of inertia for motors, refer to the related motor catalogs.

2) Calculate the **minimum acceleration torque** (See Fig. 10.2-2)

   The acceleration torque is the difference between the motor short-time output torque (base frequency: 60 Hz) explained in “10.1 (2) Maximum **driving torque in a short time**” and the load torque (τ_L / η_G) during constant speed running calculated in the above (1) . Calculate the minimum acceleration torque for the whole range of speed.

3) Calculate the **acceleration time**

   Assign the value calculated above to the equation ((Equation 10.3-15) in “10.3.2 Acceleration and deceleration time calculation” to calculate the acceleration time. If the calculated acceleration time is longer than the expected time, select the inverter and motor having one class larger capacity and calculate it again.

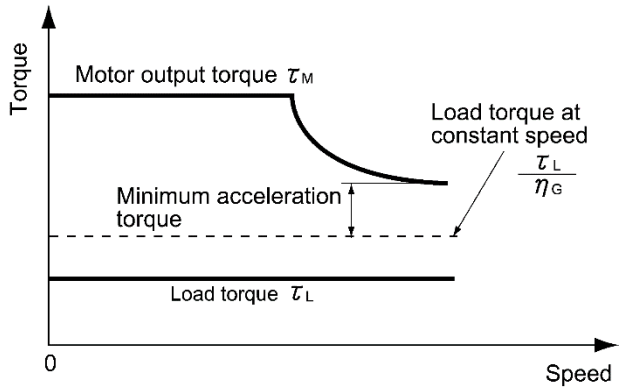

Fig. 10.2-2 Example study of minimum acceleration torque

(3) Deceleration time (For detailed calculation, refer to section 10.3.2 [3])

To calculate the deceleration time, check the motor deceleration torque characteristics for the whole range of speed in the same way as for the acceleration time.

1) Calculate the **moment of inertia** for the load and motor.
   Same as for the acceleration time.

2) Calculate the **minimum deceleration torque** (See Fig. 10.2-3 and Fig. 10.2-4)
   Same as for the deceleration time.

3) Calculate the **deceleration time**
   Assign the value calculated above to the equation ((Equation 10.3-16) to calculate the deceleration time in the same way as for the acceleration time. If the calculated deceleration time is longer than the requested time, select the inverter and motor having one class larger capacity and calculate it again.

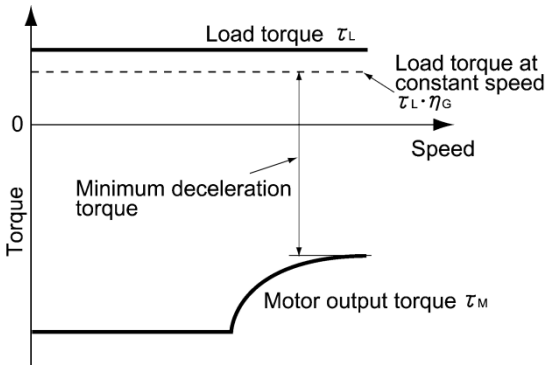

Fig. 10.2-3 Example study of minimum deceleration torque (1)

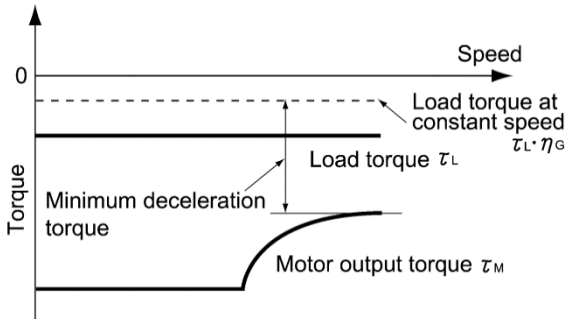

Fig. 10.2-4 Example study of minimum deceleration torque (2)

(4) Braking resistor rating (For detailed calculation, refer to section 10.3.3)

All of the following selection conditions must be satisfied with a run pattern repeat cycle.

1) The required maximum braking torque must be equal to or less than the braking resistor specification value.
   Note: If the rotation speed is equal to or higher than the base frequency, lower the braking resistor specification value also to a value inversely proportional to the rotation speed.
2) The regenerative energy per braking attempt should be equal to or less than the “discharge withstand current rating kWs” in the braking resistor specifications.
   Refer to Chapter 10 “10.3.3 Heat energy calculation of braking resistor” for specific details on the calculation method.
3) The average dissipation obtained by dividing the regenerative energy for a single cycle by the cycle should be equal to or less than the “average dissipation” in the braking resistor specifications.

(5) Motor RMS current (For detailed calculation, refer to section 10.3.4)

In metal processing machines and materials handling machines requiring positioning control, highly frequent running for a short time is repeated. In this case, calculate the maximum equivalent RMS current value (effective value of current) not to exceed the allowable value (rated current) for the motor.

10.3 Equations for Selections

10.3.1 Load torque during constant speed running

[1] General equation

The frictional force acting on a horizontally moved load must be calculated. Calculation for driving a load along a straight line with the motor is shown below.

Where the force to move a load linearly at constant speed υ (m/s) is F (N) and the motor speed for driving this is N_M (r/min), the required motor output torque τ_M (N·m) is shown in the following equation (Equation 10.3-1):

$$\tau_M = \frac{60 \cdot \upsilon}{2\pi \cdot N_M} \cdot \frac{F}{\eta_G} \quad (N \cdot m) \qquad \text{(Equation 10.3-1)}$$

where, η_G is reduction-gear efficiency.

When the inverter brakes the motor, efficiency works inversely, so the required motor torque should be calculated as follows:

$$\tau_M = \frac{60 \cdot \upsilon}{2\pi \cdot N_M} \cdot F \cdot \eta_G \quad (N \cdot m) \qquad \text{(Equation 10.3-2)}$$

$(60 \cdot \upsilon) / (2\pi \cdot N_M)$ in the above equation is an equivalent turning radius corresponding to speed υ (m/s) around the motor shaft.

The value F (N) in the above equations depends on the load type.

[2] Obtaining the required force F

■ **Moving a load horizontally**

A simplified mechanical configuration is assumed as shown in Fig. 10.3-1. If the mass of the carrier table is W_0 (kg), the load is W (kg), and the friction coefficient of the ball screw is μ, then the friction force F (N) is expressed as follows (Equation (Equation 10.3-3), which is equal to a required force for driving the load:

$$F = (W_o + W) \cdot g \cdot \mu \quad (N) \qquad \text{(Equation 10.3-3)}$$

where, g is the gravity acceleration (≒ 9.8 (m/s^2)).

Then, the driving torque around the motor shaft is expressed with the following equation ((Equation 10.3-4):

$$\tau_M = \frac{60 \cdot \upsilon}{2\pi \cdot N_M} \cdot \frac{(W_o + W) \cdot g \cdot \mu}{\eta_G} \quad (N \cdot m) \qquad \text{(Equation 10.3-4)}$$

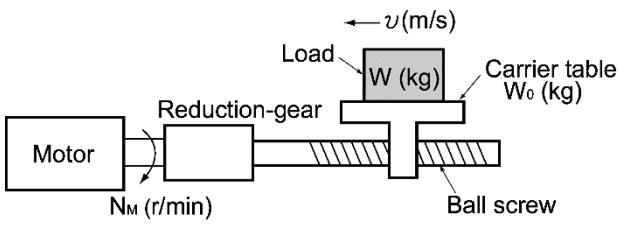

Fig. 10.3-1 Moving a load horizontally

■ Vertical lift load

A simplified mechanical configuration is assumed as shown in Fig. 10.3-2. If the mass of the cage is W_0 (kg), the load is W (kg), and the balance weight is W_B (kg), then the forces F (N) required for lifting the load up and down are expressed as follows (equation (Equation 10.3-5 and equation (Equation 10.3-6).

For lifting

$$F = (W_0 + W - W_B) \cdot g \quad (N) \qquad \text{(Equation 10.3-5)}$$

For lowering

$$F = (W_B - W - W_0) \cdot g \quad (N) \qquad \text{(Equation 10.3-6)}$$

Assuming the maximum load is W_{max}, the mass of the balance weight W_B (kg) is generally obtained with the expression $W_B = W_0 + W_{max}/2$. Depending on the mass of load W (kg), the values of F (N) may be negative in both cases of lifting up and down, which means the lift is in braking mode. So, be careful in motor and inverter selection.

For calculation of the required output torque τ around the motor shaft, apply the expression ((Equation 10.3-1) or (Equation 10.3-2) depending on the driving or braking mode of the lift, that is, apply the expression (Equation 10.3-1) if the value of F (N) is positive, and the ((Equation 10.3-2) if negative.

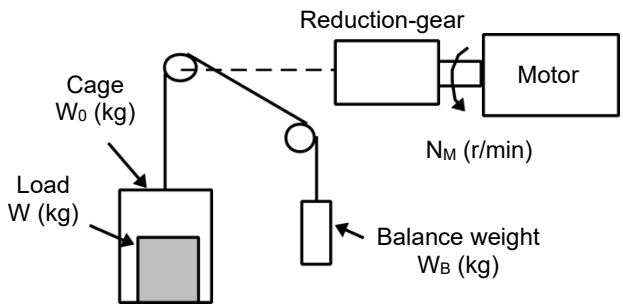

Fig. 10.3-2 Vertical lift load

■ Inclined lift load

Although the mechanical configuration of an inclined lift load is similar to that of a vertical lift load, non negligible friction force in the inclined lift makes the difference; in an inclined lift load, there is a distinct difference between the expression to calculate the lift force F (N) for lifting and that for lowering. If the incline angle is θ, and the friction coefficient is μ, as shown in Fig. 10.3-3, the driving force F (N) is expressed as follows:

For lifting

$$F = ((W_0 + W)(\sin\theta + \mu \cdot \cos\theta) - W_B) \cdot g \quad (N) \qquad \text{(Equation 10.3-7)}$$

For lowering

$$F = (W_B - (W_0 + W)(\sin\theta + \mu \cdot \cos\theta)) \cdot g \quad (N) \qquad \text{(Equation 10.3-8)}$$

The braking mode applies to both lifting and lowering as in the vertical lift load. And the calculation of the required output torque τ around the motor shaft is the same as in the vertical lift load; apply the expression (Equation 10.3-1) if the value of F (N) is positive, and the (Equation 10.3-2) if negative.

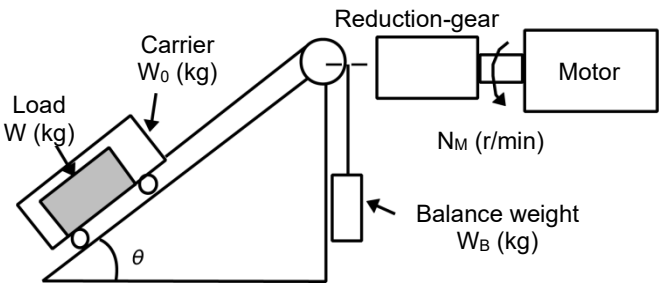

Fig. 10.3-3 Inclined lift load

10.3.2 Acceleration and deceleration time calculation

When an object whose moment of inertia is J (kg·m^2) rotates at the speed N (r/min), it has the following kinetic energy (Equation 10.3-9):

$$E = \frac{J}{2} \cdot \left(\frac{2\pi \cdot N}{60} \right)^2 \ (J) \qquad \text{(Equation 10.3-9)}$$

To accelerate the above rotational object, the kinetic energy will be increased; to decelerate the object, the kinetic energy must be discharged. The torque required for acceleration and deceleration can be expressed as follows (Equation 10.3-10)):

$$\tau = J \cdot \frac{2\pi}{60} \left(\frac{dN}{dt} \right) \ (N \cdot m) \qquad \text{(Equation 10.3-10)}$$

This way, the mechanical moment of inertia is an important element in the acceleration and deceleration. First, calculation method of moment of inertia is described, after the calculation methods for the acceleration and deceleration times are explained.

[1] Calculation of moment of inertia

For an object that rotates around the shaft, virtually divide the object into small segments and square the distance from the shaft to each segment. Then, sum the squares of the distances and the masses of the segments to calculate the moment of inertia.

$$J = \Sigma \ (W_i \cdot r_i^2) \qquad (kg \cdot m^2) \qquad \text{(Equation 10.3-11)}$$

The following describes equations to calculate moment of inertia having different shaped loads or load systems.

(1) Hollow cylinder and solid cylinder

The common shape of a rotating body is hollow cylinder. The moment of inertia J (kg·m^2) around the hollow cylinder center axis can be calculated as follows (Fig. 10.3-4), where the outer and inner diameters are D_1 and D_2 [m] and total mass is W [kg] in (Equation 10.3-12).

$$J = \frac{W \cdot (D_1^2 + D_2^2)}{8} \ (kg \cdot m^2) \qquad \text{(Equation 10.3-12)}$$

For a similar shape, a solid cylinder, calculate the moment of inertia as D_2 is 0.

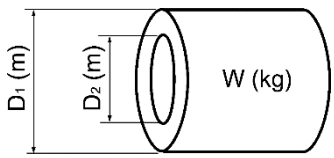

Fig. 10.3-4 Hollow cylinder

(2) For a general rotating body

Moment of inertia of various rotating bodies Table 10.3-1 lists the calculation equations of moment of inertia of various rotating bodies including the above cylindrical rotating body.

Table 10.3-1 Moment of inertia of various rotating bodies

Shape	Weight: W (kg) Moment of inertia J (kg·m²)	Shape	Weight: W (kg) Moment of inertia J (kg·m²)
Hollow cylinder 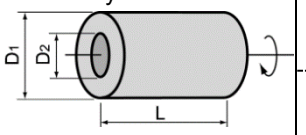	$W = \frac{\pi}{4} \cdot (D_1{}^2 - D_2{}^2) \cdot L \cdot \rho$ $J = \frac{1}{8} \cdot W \cdot (D_1{}^2 + D_2{}^2)$	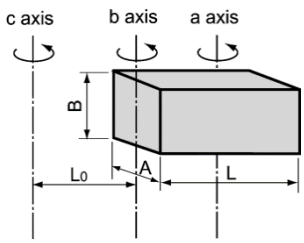	$W = A \cdot B \cdot L \cdot \rho$ $J_a = \frac{1}{12} \cdot W \cdot (L^2 + A^2)$ $J_b = \frac{1}{12} \cdot W \cdot (L^2 + \frac{1}{4} \cdot A^2)$ $J_c \fallingdotseq W \cdot (L_0{}^2 + L_0 \cdot L + \frac{1}{3} \cdot L^2)$
Sphere 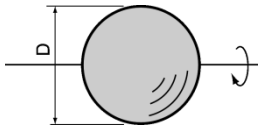	$W = \frac{\pi}{6} \cdot D^3 \cdot \rho$ $J = \frac{1}{10} \cdot W \cdot D^2$		
Cone 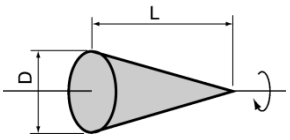	$W = \frac{\pi}{12} \cdot D^2 \cdot L \cdot \rho$ $J = \frac{3}{40} \cdot W \cdot D^2$	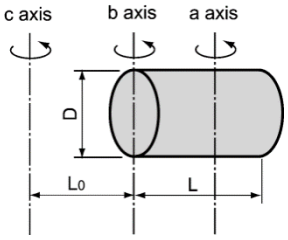	$W = \frac{\pi}{4} \cdot D^2 \cdot L \cdot \rho$ $J_a = \frac{1}{12} \cdot W \cdot (L^2 + \frac{3}{4} \cdot D^2)$ $J_b = \frac{1}{3} \cdot W \cdot (L^2 + \frac{3}{16} \cdot D^2)$ $J_c \fallingdotseq W \cdot (L_0{}^2 + L_0 \cdot L + \frac{1}{3} \cdot L^2)$
Rectangular prism 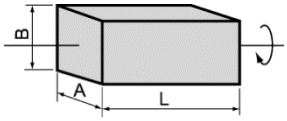	$W = A \cdot B \cdot L \cdot \rho$ $J = \frac{1}{12} \cdot W \cdot (A^2 + B^2)$		
Square cone (pyramid, rectangular base) 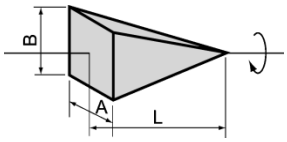	$W = \frac{1}{3} \cdot A \cdot B \cdot L \cdot \rho$ $J = \frac{1}{20} \cdot W \cdot (A^2 + B^2)$	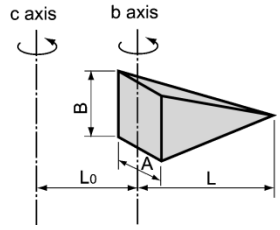	$W = \frac{1}{3} \cdot A \cdot B \cdot L \cdot \rho$ $J_b = \frac{1}{10} \cdot W \cdot (L^2 + \frac{1}{4} \cdot A^2)$ $J_c \fallingdotseq W \cdot (L_0{}^2 + \frac{3}{2} \cdot L_0 \cdot L + \frac{3}{5} \cdot L^2)$
Triangular prism 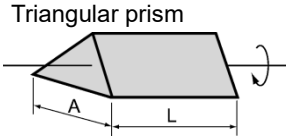	$W = \frac{\sqrt{3}}{4} \cdot A^2 \cdot L \cdot \rho$ $J = \frac{1}{3} \cdot W \cdot A^2$		
Tetrahedron with an equilateral triangular base 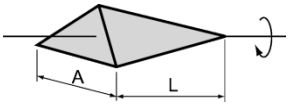	$W = \frac{\sqrt{3}}{12} \cdot A^2 \cdot L \cdot \rho$ $J = \frac{1}{5} \cdot W \cdot A^2$	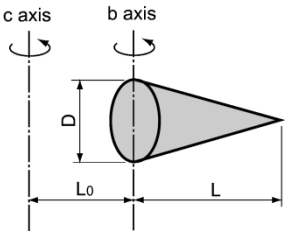	$W = \frac{\pi}{12} \cdot D^2 \cdot L \cdot \rho$ $J_b = \frac{1}{10} \cdot W \cdot (L^2 + \frac{3}{8} \cdot D^2)$ $J_c \fallingdotseq W \cdot (L_0{}^2 + \frac{3}{2} \cdot L_0 \cdot L + \frac{3}{5} \cdot L^2)$
Main metal density (at 20 °C) ρ (kg/m³) Iron: 7860, Copper: 8940, Aluminum: 2700			

(3) For a load running horizontally

Assume a carrier table driven by a motor as shown in Fig. 10.3-1. If the table speed is υ (m/s) when the motor speed is N_M (r/min), then an equivalent distance from the shaft is equal to $60 \cdot \upsilon / (2\pi \cdot N_M)$ (m). The moment of inertia of the table and load to the shaft is calculated as follows ((Equation 10.3-13):

$$J = \left(\frac{60\upsilon}{2\pi \cdot N_M} \right)^2 \cdot (W_O + W) \quad (\mathrm{kg \cdot m^2}) \qquad \text{(Equation 10.3-13)}$$

(4) For a vertical or inclined lift load

The moment of inertia J ($\mathrm{kg \cdot m^2}$) of the loads connected with a rope as shown in Fig. 10.3-2 and Fig. 10.3-3 is calculated with the following equation ((Equation 10.3-14) using the mass of all moving objects, although the motion directions of those loads are different.

$$J = \left(\frac{60\upsilon}{2\pi \cdot N_M} \right)^2 \cdot (W_O + W + W_B) \quad (\mathrm{kg \cdot m^2}) \qquad \text{(Equation 10.3-14)}$$

[2] Calculation of the acceleration time

Fig. 10.3-5 shows a general load model. Assume that a motor drives a load via a reduction-gear with efficiency η_G. The time required to accelerate this load in stop state to a speed of N_M (r/min) is calculated with the following equation ((Equation 10.3-15):

$$t_{ACC} = \frac{J_1 + J_2/\eta_G}{\tau_M - \tau_L/\eta_G} \cdot \frac{2\pi \cdot (N_M - 0)}{60} \quad (\mathrm{s}) \qquad \text{(Equation 10.3-15)}$$

where,

J_1 : Motor shaft moment of inertia ($\mathrm{kg \cdot m^2}$)

J_2 : Load shaft moment of inertia converted to motor shaft ($\mathrm{kg \cdot m^2}$)

τ_M : Minimum motor output torque in driving motor (N·m)

τ_L : Maximum load torque converted to motor shaft (N·m)

η_G: Reduction-gear efficiency

As clarified in the above equation, the equivalent moment of inertia becomes ($J_1 + J_2/\eta_G$) by considering the reduction-gear efficiency.

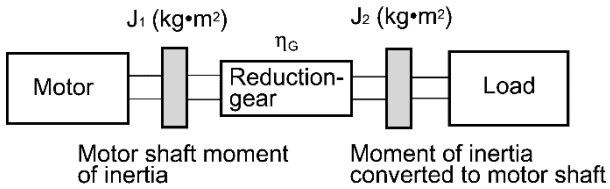

Fig. 10.3-5 Load model including reduction-gear

[3] Calculation of the deceleration time

In a load system shown in Fig. 10.3-5, the time needed to stop the motor rotating at a speed of N_M (r/min) is calculated with the following equation (Equation 10.3-16):

$$t_{DEC} = \frac{J_1 + J_2 \cdot \eta_G}{\tau_M - \tau_L \cdot \eta_G} \cdot \frac{2\pi \cdot (0 - N_M)}{60} \quad (s) \qquad \text{(Equation 10.3-16)}$$

where,

J_1 : Motor shaft moment of inertia (kg·m^2)

J_2 : Load shaft moment of inertia converted to motor shaft (kg·m^2)

τ_M : Minimum motor output torque in braking (or decelerating) motor (N·m)

τ_L : Maximum load torque converted to motor shaft (N·m)

η_G: Reduction-gear efficiency

In the above equation, generally output torque τ_M is negative and load torque τ_L is positive. So, deceleration time becomes shorter.

Tip For lift applications, calculate the deceleration time using the negative value of τ_L (maximum load torque converted to motor shaft).

[4] Calculating non-linear acceleration/deceleration time

In applications requiring frequent acceleration/deceleration, the inverter can accelerate/decelerate the motor in the shortest time utilizing the maximum torque capability. The inverter in vector control mode can easily perform this type of operation.

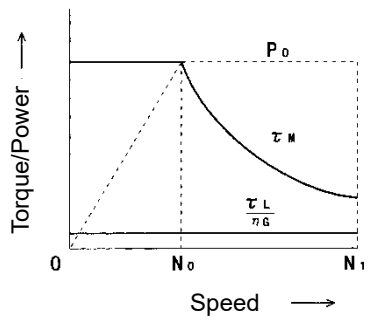

Fig. 10.3-6 Example of driving characteristics with a constant output range

In this case, the acceleration/deceleration vs. speed curve will form a non-linear figure, and the acceleration / deceleration time cannot be calculated by a single expression. Generally, the acceleration/deceleration time is obtained by calculating the acceleration/deceleration time of ΔN that is a difference of speed N broken into small parts, and then integrating it to obtain the total acceleration/deceleration time from start to end. Because the smaller ΔN provides higher accuracy, this numerical calculation needs an aid of a computer program.

The following is a guide for the numerical calculation method using a computer program. Fig. 10.3-6 illustrates an example of driving characteristics with a constant output range. In the figure, the range under N_0 is of constant torque characteristics, and the range between N_0 and N_1 is of a constant output with the non-linear acceleration/deceleration characteristics.

The expression (Equation 10.3-17) gives an acceleration time Δt_{ACC} within a ΔN speed increment.

$$\Delta t_{ACC} = \frac{J_1 + J_2/\eta_G}{\tau_M - \tau_L/\eta_G} \cdot \frac{2\pi \cdot \Delta N}{60} \quad (s) \qquad \text{(Equation 10.3-17)}$$

Before proceeding this calculation, obtain the motor shaft moment of inertia J_1, the load shaft moment of inertia converted to motor shaft J_2, maximum load torque converted to motor shaft τ_L, and the reduction-gear efficiency η_G. Apply the maximum motor output torque τ_M according to an actual speed thread ΔN as follows.

[τ_M in $N \leq N_0$] Constant output torque range

$$\tau_M = \frac{60 \cdot P_O}{2\pi \cdot N_0} \quad (N \cdot m) \qquad \text{(Equation 10.3-18)}$$

[τ_M in $N_0 \leq N \leq N1$] Constant output power range
(The motor output torque is inversely proportional to the motor speed)

$$\tau_M = \frac{60 \cdot P_O}{2\pi \cdot N} \quad (N \cdot m) \qquad \text{(Equation 10.3-19)}$$

If the result obtained by the above calculation does not satisfy the target value, select an inverter with one rank higher capacity.

[5] Calculating non-linear deceleration time

Use the following expression to obtain the non-linear deceleration time as well as for the acceleration time.

$$\Delta t_{DEC} = \frac{J_1 + J_2 \cdot \eta_G}{\tau_M - \tau_L \cdot \eta_G} \cdot \frac{2\pi \cdot \Delta N}{60} \quad (s) \qquad \text{(Equation 10.3-20)}$$

In this expression, both τ_M, and ΔN are generally negative values so that the load torque τ_L serves to assist the deceleration operation. For a lift load, however, the load torque τ_L is a negative value in some modes. In this case, the τ_M, and τ_L will take polarity opposite to each other and the τ_L will actuate to prevent the deceleration operation of the lift.

10.3.3 Heat energy calculation of braking resistor

If the inverter brakes the motor, the kinetic energy of mechanical load is converted to electric energy to be regenerated into the inverter circuit. This regenerative energy is often consumed in so-called braking resistors as heat. The following explains the braking resistor rating.

[1] Calculation of regenerative energy

In the inverter operation, one of the regenerative energy sources is the kinetic energy that is generated when an object with moment of inertia J is rotating.

(1) Kinetic energy of a moving object

When an object with moment of inertia J (kg·m^2) rotates at a speed N_2 (r/min), its kinetic energy is shown in (Equation 10.3-21).

$$E = \frac{J}{2} \cdot \left(\frac{2\pi \cdot N_2}{60}\right)^2 \ (J = W_S) \qquad \text{(Equation 10.3-21)}$$

$$\fallingdotseq \frac{1}{182.4} \cdot J \cdot N_2^2 \ (J) \qquad \text{(Equation 10.3-21')}$$

When this object is decelerated to a speed N_1 (r/min), the output energy is as follows ((Equation 10.3-22):

$$E = \frac{J}{2} \cdot \left[\left(\frac{2\pi \cdot N_2}{60}\right)^2 - \left(\frac{2\pi \cdot N_1}{60}\right)^2\right] \ (J) \qquad \text{(Equation 10.3-22)}$$

$$\fallingdotseq \frac{1}{182.4} \cdot J \cdot (N_2^2 - N_1^2) \ (J) \qquad \text{(Equation 10.3-22')}$$

The energy regenerated to the inverter as shown in Fig. 10.3-5 is calculated from the reduction-gear efficiency η_G and motor efficiency η_M as follows ((Equation 10.3-23):

$$E \fallingdotseq \frac{1}{182.4} \cdot (J_1 + J_2 \cdot \eta_G) \cdot \eta_M \cdot (N_2^2 - N_1^2) \ (J) \qquad \text{(Equation 10.3-23)}$$

(2) Potential energy of a lift

When an object whose mass is W (kg) falls from the height h_2 (m) to the height h_1 (m), the output energy is as follows ((Equation 10.3-24):

$$E = W \cdot g \cdot (h_2 - h_1) \ (J = W_S) \qquad \text{(Equation 10.3-24)}$$

$$g \fallingdotseq 9.8065 \ (m/s^2)$$

The energy regenerated to the inverter is calculated from the reduction-gear efficiency η_G and motor efficiency η_M as follows ((Equation 10.3-25):

$$E = W \cdot g \cdot (h_2 - h_1) \cdot \eta_G \cdot \eta_M \ (J) \qquad \text{(Equation 10.3-25)}$$

10.3.4 Calculating the RMS rating of the motor

In case of the load which is repeatedly and very frequently driven by a motor, the motor current fluctuates largely and enters the short-time rating range of the motor repeatedly. Therefore, you have to review the allowable thermal rating of the motor. The heat value is assumed to be approximately proportional to the square of the motor current.

If an inverter drives a motor in duty cycles that are much shorter than the thermal time constant of the motor, calculate the “equivalent RMS current” as mentioned below, and select the motor so that this RMS current will not exceed the rated current of the motor.

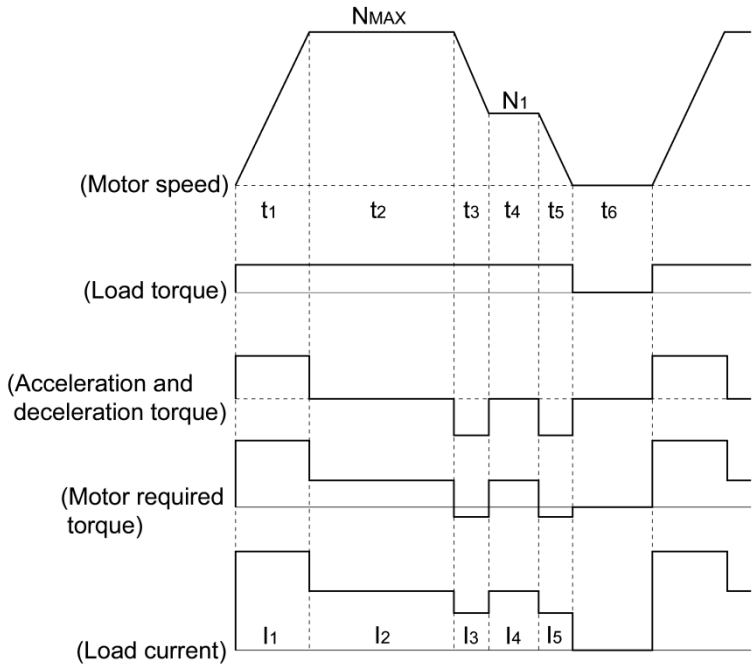

Fig. 10.3-7 Sample of the repetitive operation

First, calculate the required torque of each part based on the speed pattern. Then using the torque-current curve of the motor, convert the torque to the motor current. The “equivalent RMS current, Ieq” can be finally calculated by the following equation:

$$I_{eq} = \sqrt{\frac{I_1^2 \cdot t_1 + I_2^2 \cdot t_2 + I_3^2 \cdot t_3 + I_4^2 \cdot t_4 + I_5^2 \cdot t_5}{t_1 + t_2 + t_3 + t_4 + t_5 + t_6}} \quad (A) \qquad \text{(Equation 10.3-26)}$$

The torque-current curve for the dedicated motor is not available for actual calculation. Therefore, calculate the motor current I from the load torque τ_1 using the following equation ((Equation 10.3-27)). Then, calculate the equivalent current Ieq:

$$I = \sqrt{\left(\frac{\tau_1}{100} \times It_{100}\right)^2 + Im_{100}^2} \quad (A) \qquad \text{(Equation 10.3-27)}$$

Where, τ_1 is the load torque (%), I_{t100} is the torque current, and I_{m100} is exciting current.

10.4 Selecting the Inverter Rating Specification (HHD/HND/HD/ND)

10.4.1 Precautions in making the selection

FRENIC-MEGA has four rating specifications, and so by making changes to setting values, it is possible to switch between the Heavy Duty application HHD/HD specification and the Normal Duty application HND/ND specification.

When selecting the inverter capacity, consider the capacity of the motor being used and the overload characteristics of the load, and refer to the information on HHD/HND/HD/ND specifications in “10.4.2 Guideline for selecting inverter specification and capacity”.

Heavy Duty applications (HHD specification):	This applies to equipment where the inverter load current during normal operation is less than the inverter rated current, and the load current during overload operation is less than 150% of the rated current for 1 minute, and 200% for 3 seconds (applications requiring frequent acceleration and deceleration such as conveyors and cranes).
Normal Duty applications (HND specification):	This applies to equipment where the inverter load current during normal operation is less than the inverter rated current, and the load current during overload operation is less than 120% of the rated current for 1 minute (fans, pumps, centrifuges, etc.).
Heavy Duty applications (HD specification):	This applies to equipment where the inverter load current during normal operation is less than the inverter rated current, and the load current during overload operation is less than 150% of the rated current for 1 minute (wire drawing machine, etc.). Ambient temperature is 40°C (104°F) or less.
Normal Duty applications (ND specification):	This applies to equipment where the inverter load current during normal operation is less than the inverter rated current, and the load current during overload operation is less than 120% of the rated current for 1 minute (fan, pump, etc.). Ambient temperature is 40°C (104°F) or less.

10.4.2 Guideline for selecting inverter specification and capacity

Table 10.4-1 shows the functional differences between the HHD/HND/HD/ND specifications.

If the ND mode does not satisfy the requirements in your application in view of the overload capability and functionality, you need to select the inverter one or two ranks higher in capacity (HD/HND/HHD mode) than that of the motor rating.

To use the inverter under the ambient temperature or carrier frequency condition changed from the factory default, the output current rating requires derating due to the ambient temperature or carrier frequency. It is, therefore, necessary to select the inverter unit, referring to Table 10.4-1.

Table 10.4-1 Functional differences between HHD/HND/HD/ND specifications

Function	HHD specification	HND specification	HD *1 specification	ND *1 specification
Application	Heavy Duty applications	Normal Duty applications	Heavy Duty applications	Normal Duty applications
Function code setting value	F80 data = 0 (factory default)	F80 data = 1	F80 data = 3	F80 data =4
Continuous current rating level (inverter rated current level)	Please refer to Chapter 12 “SPECIFICATIONS”. (Operating temperature: 50°C(122°F))		Please refer to Chapter 12 “SPECIFICATIONS”. (Operating temperature: 40°C(104°F))	
Overload capability	150% for 1 min, 200% for 3 s	120% for 1 min	150% for 1 min	120% for 1 min
DC braking (braking level)	Setting range: 0 to 100% (Based on the rated current level of HHD-mode inverter)	Setting range: 0 to 80% (Based on the rated current level of HND-mode inverter)	Setting range: 0 to 80% (Based on the rated current level of HD-mode inverter)	Setting range: 0 to 60% (Based on the rated current level of ND-mode inverter)
Motor sound (carrier frequency)	Setting range: 0.75 to 16 kHz (FRN0003G2S-2G to FRN0288G2S-2G) (FRN0002G2■-4G to FRN0179G2■-4G) 0.75 to 10 kHz (FRN0346G2S-2G to FRN0432G2S-2G) (FRN0217G2■-4G to FRN1480G2■-4G)	Setting range: 0.75 to 16 kHz (FRN0032G2S-2G to FRN0088G2S-2G) (FRN0018G2■-4G to FRN0045G2■-4G) 0.75 to 10 kHz (FRN0115G2S-2G to FRN0288G2S-2G) (FRN0060G2■-4G to FRN0179G2■-4G) 0.75 to 6 kHz (FRN0346G2S-2G to FRN0432G2S-2G) (FRN0217G2■-4G to FRN1480G2■-4G)	Setting range: 0.75 to 10 kHz (FRN0085G2■-4G to FRN0179G2■-4G) 0.75 to 6 kHz (FRN0217G2■-4G to FRN1480G2■-4G)	Setting range: 0.75 to 6 kHz (FRN0085G2■-4G to FRN1480G2■-4G)
Current limiting level	Initial value: 180% (FRN0075G2S-2G/ FRN0041G2■-4G or below) Initial value: 160% (FRN0088G2S-2G/ FRN0045G2■-4G or above)	Initial value: 130%	Initial value: 160%	Initial value: 130%
Current indication and output	Based on the rated current level for HHD specification inverter	Based on the rated current level for HND specification inverter	Based on the rated current level for HD specification inverter	Based on the rated current level for ND specification inverter

***1 Supported with ROM0600 or later.**

Chapter 11
SELECTING PERIPHERAL EQUIPMENT

This chapter describes how to use a range of peripheral equipment and options, FRENIC-MEGA's configuration with them, and requirements and precautions for selecting wires and crimp terminals.

Contents

11.1 Configuring the FRENIC-MEGA ····· 11-1
11.2 Size of Current for Each Part of the Inverter ····· 11-2
11.3 Molded Case Circuit Breakers (MCCB), Earth Leakage Circuit Breakers (ELCB) and Magnetic Contactors (MC) ····· 11-5
11.3.1 Function Overview ····· 11-5
11.3.2 Connection Example and Criteria for Selection of Circuit Breakers ····· 11-6
11.4 Lightning Surge Protection Device SPD ····· 11-12
11.5 Filter Capacitors for Suppressing AM Radio Band Noise ····· 11-13
11.6 Braking Resistors (DB) and Braking Units ····· 11-14
11.6.1 Selecting a Braking Resistor ····· 11-14
[1] Selection procedure ····· 11-14
[2] Notes on selection ····· 11-14
11.6.2 Overview of Braking Resistors (DB) and Braking Units ····· 11-15
[1] Standard type ····· 11-15
[2] 10%ED type ····· 11-15
[3] Overview of braking unit ····· 11-16
11.6.3 Specification ····· 11-17
11.6.4 External dimensions ····· 11-21
11.7 High Power Factor Power Supply Regeneration PWM Converters (RHC Series) ····· 11-23
11.7.1 Overview ····· 11-23
11.7.2 Specification ····· 11-24
[1] Standard specification ····· 11-24
[2] Common Specifications ····· 11-28
11.7.3 Function Specifications ····· 11-30
11.7.4 Device Configuration ····· 11-35
11.7.5 External Dimensions ····· 11-38
11.8 Compact Power Regeneration PWM Converter ····· 11-47
11.8.1 Specifications ····· 11-47
[1] Standard specification ····· 11-47
[2] Common specifications ····· 11-48
[3] Terminal functions ····· 11-49

11.8.2 Device Configuration 11-51
[1] Device configuration table 11-51
[2] Basic connection diagrams 11-52
11.8.3 External Dimensions 11-53
11.8.4 Peripheral Equipment 11-55
11.9 DC Reactors (DCRs) 11-60
11.10 AC Reactors (ACRs) 11-66
11.11 Output Circuit Filters (OFL) 11-72
11.12 Zero-phase Reactors for Suppressing Radio Noise (ACL) 11-75
11.13 External Cooling Fan Attachments 11-76
11.14 IP40 Compatibility Attachment (P40ST-F□1) 11-78
11.15 External Frequency Command Potentiometer (External) 11-80
11.16 Extension Cable for Remote Operation 11-81
11.17 Selecting Measurement Options 11-82
11.17.1 Frequency meters 11-82
11.18 Control Terminal Block (G1S Compatible) OPC-G1-TB1 11-83
11.19 Built-in Option Card Types and Ports in Which They Can be Installed 11-84
11.19.1 T-Link Communication Card (OPC-TL) 11-86
11.19.2 SX-bus Communication Card (OPC-SX) 11-90
11.19.3 PROFIBUS-DP Communication Card (OPC-PDP2) 11-93
11.19.4 CANopen Communication Card (OPC-COP2) 11-96
11.19.5 DeviceNet Communication Card (OPC-DEV) 11-99
11.19.6 CC-Link Communication Card (OPC-CCL) 11-103
11.19.7 Multiprotocol Ethernet® Communication Card (OPC-ETM) 11-105
11.19.8 Digital Input Interface Card (OPC-DI) 11-109
11.19.9 Digital Output Interface Card (OPC-DO) 11-112
11.19.10 Analog Interface Card (OPC-AIO) 11-115
11.19.11 Analog current output (2ch) interface card (OPC-AO) 11-121
11.19.12 Resistance temperature detector input card (OPC-PT) 11-123
11.19.13 Relay Output Interface Card (OPC-RY) 11-126
11.19.14 Relay output interface card (OPC-RY2) 11-128
11.19.15 PG Interface Card (OPC-PG) 11-130
11.19.16 PG Interface (5 V Line Driver) Card (OPC-PG2) 11-133
11.19.17 PG Interface (5 V Line Driver x 2 Systems) Card (OPC-PG22) 11-137
11.19.18 PG Interface Card for Synchronous Motor with Sensor (OPC-PMPG2) 11-140
11.20 Multi-function Keypad (TP-A2SW) 11-142

11.1 Configuring the FRENIC-MEGA

This section lists the names and features of peripheral equipment and options for the FRENIC-MEGA as well as a configuration example.

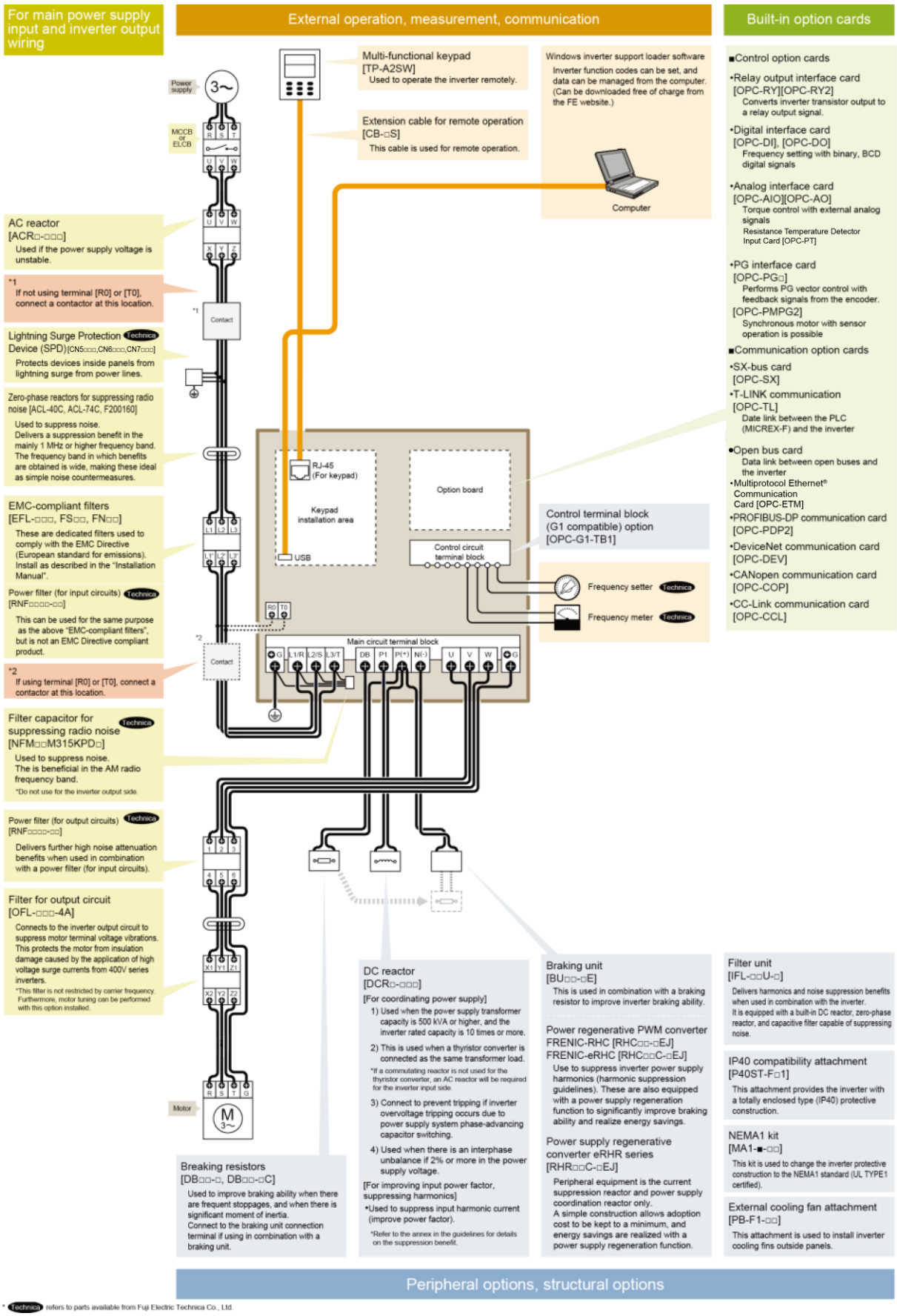

Fig. 11.1-1 Connection configuration diagram

11.2 Size of Current for Each Part of the Inverter

Table 11.2-1 contains information for referencing current values for each part of the inverter based on the power system and applicable motor capacity necessary when selecting peripheral equipment and options.

Table 11.2-1 Size of current for each part of inverter

Power system	Specification	Standard applicable motor (kW) [HP]	Inverter type	50 Hz, 200 V			60 Hz, 220 V			Braking resistor circuit current (A)
				Input RMS current value (A)		DC intermediate circuit current (A)	Input RMS current value (A)		DC intermediate circuit current (A)	
				DC reactor (DCR)			DC reactor (DCR)			
				w/ DCR	w/o DCR		w/ DCR	w/o DCR		
Three-phase 200 V	HHD	0.4 [1/2]	FRN0003G2S-2G	1.6	3.1	2.0	1.5	3.0	1, 8	1.2
	HHD	0.75 [1]	FRN0005G2S-2G	3.2	5.3	4.0	3.0	4.9	3.7	1.6
	HHD	1.5 [2]	FRN0008G2S-2G	6.1	9.5	7.5	5.6	8.7	6.9	3, 6
	HHD	2.2 [3]	FRN0011G2S-2G	8.9	13.2	11.0	8.1	12.0	10.0	3.5
	HHD	3.7 [5]	FRN0018G2S-2G	15.0	22.2	18.4	13.6	20.0	16.7	4.1
	HHD	5.5 [7.5]	FRN0032G2S-2G	21.1	31.5	25.9	19.0	28.4	23.3	6.4
	HND	7.5 [10]		28.8	42.7	35.3	26.0	38.5	31.9	6.4
	HHD	7.5 [10]	FRN0046G2S-2G	28.8	42.7	35.3	26.0	38.5	31.9	6.1
	HND	11 [15]		42.2	60.7	51.7	38.0	54.7	46.6	6.1
	HHD	11 [15]	FRN0059G2S-2G	42.2	60.7	51.7	38.0	54.7	46.6	9.1
	HND	15 [20]		57.6	80.1	70.6	52.0	72.2	63.7	9.1
	HHD	15 [20]	FRN0075G2S-2G	57.6	80.1	70.6	52.0	72.2	63.7	11
	HND	18.5 [25]		71.0	97.0	87.0	64.0	87.4	78.4	11
	HHD	18.5 [25]	FRN0088G2S-2G	71.0	97.0	87.0	64.0	87.4	78.4	14
	HND	22 [30]		84.4	112	103	76.0	101	93.1	14
	HHD	22 [30]	FRN0115G2S-2G	84.4	112	103	76.0	101	93.1	15
	HND	30 [40]		114	151	140	103	136	126	15
	HHD	30 [40]	FRN0146G2S-2G	114	151	140	103	136	126	19
	HND	37 [50]		138	185	169	124	167	152	19
	HHD	37 [50]	FRN0180G2S-2G	138	185	169	124	167	152	25
	HND	45 [60]		167	225	205	150	203	184	25
	HHD	45 [60]	FRN0215G2S-2G	167	225	205	150	203	184	30
	HND	55 [75]		203	270	249	183	243	224	30
	HHD	55 [75]	FRN0288G2S-2G	203	270	249	183	243	224	37
	HND	75 [100]		282	-	345	254	-	311	37
	HHD	75 [100]	FRN0346G2S-2G	282		345	254		311	49
	HND	90 [125]		334		409	301		368	49
	HHD	90 [125]	FRN0432G2S-2G	334		409	301		368	62
	HND	110 [150]		410		502	369		452	62

(Note)

- Inverter efficiency is calculated using values suitable for each inverter model. Furthermore, input RMS current is calculated based on the following conditions.

  [FRN0003 to 0115G2S-2G] Power supply capacity: 500 kVA, source impedance: 5%

  [FRN0146 to 0432G2S-2G] Values commensurate with the capacity recommended by Fuji Electric are used for calculating the power supply capacity and source impedance.

- The input RMS currents listed in the above table will vary in inverse proportion to the power supply voltage, such as 230 V.
- The braking circuit current is always constant, independent of braking resistor type (built-in, standard, 10%ED).

Table 11.2-1 Size of current for each part of inverter (cont.)

Power system	Specification	Standard applicable motor (kW) [HP]	Inverter type	50 Hz, 400 V			60 Hz, 440 V			Braking resistor circuit current (A)
				Input RMS current (A)		DC intermediate circuit current (A)	Input RMS current (A)		DC intermediate circuit current (A)	
				DC reactor (DCR)			DC reactor (DCR)			
				w/ DCR	w/o DCR		w/ DCR	w/o DCR		
Three-phase 400 V	HHD	0.4 [1/2]	FRN0002G2□-4G	0.85	1.7	1	0.74	1.7	0.99	0.8
	HHD	0.75 [1]	FRN0003G2□-4G	1.6	3.1	2.0	1.5	2.9	1.9	1.1
	HHD	1.5 [2]	FRN0004G2□-4G	3.0	5.9	3.7	2.8	5.4	3.5	1, 8
	HHD	2.2 [3]	FRN0006G2□-4G	4.5	8.2	5.6	4.1	7.5	5.1	1, 8
	HHD	3.7 [5]	FRN0009G2□-4G	7.5	13	9.2	6.9	11.8	8.5	2.1
	HHD	5.5 [7.5]	FRN0018G2□-4G	10.6	17.3	13.0	9.6	15.7	11.8	3.2
	HND	7.5 [10]		14.4	23.2	17.7	13.0	21.0	16.0	3.2
	HHD	7.5 [10]	FRN0023G2□-4G	14.4	23.2	17.7	13.0	21.0	16.0	3.1
	HND	11 [15]		21.1	33.0	25.9	19.0	29.8	23.3	3.1
	HHD	11 [15]	FRN0035G2□-4G	21.1	33.0	25.9	19.0	29.8	23.3	4.5
	HND	15 [20]		28.8	43.8	35.3	26.0	39.5	31.9	4.5
	HHD	15 [20]	FRN0041G2□-4G	28.8	43.8	35.3	26.0	39.5	31.9	5.7
	HND	18.5 [25]		35.5	52.3	43.5	32.0	47.1	39.2	5.7
	HHD	18.5 [25]	FRN0045G2□-4G	35.5	52.3	43.5	32.0	47.1	39.2	7.2
	HND	22 [30]		42.2	60.6	51.7	38.0	54.6	46.6	7.2
	HHD	22 [30]	FRN0060G2□-4G	42.2	60.6	51.7	38.0	54.6	46.6	7.7
	HND	30 [40]		57.0	77.9	69.9	51.4	70.2	63.0	7.7
	HHD	30 [40]	FRN0085G2□-4G	57.0	77.9	69.9	51.4	70.2	63.0	10
	HND/HD	37 [50]		68.5	94.3	83.9	61.8	85.0	75.7	10
	ND	45 [60]		83.2	114	102	75.0	103	91.9	10
	HHD	37 [50]	FRN0105G2□-4G	68.5	94.3	83.9	61.8	85.0	75.7	12
	HND/HD	45 [60]		83.2	114	102	75.0	103	91.9	12
	ND	55 [75]		102	140	125	91.9	126	113	12
	HHD	45 [60]	FRN0139G2□-4G	83.2	114	102	75.0	103	91.9	15
	HND/HD	55 [75]		102	140	125	91.9	126	113	15
	ND	75 [100]		138		169	124		152	15
	HHD	55 [75]	FRN0179G2□-4G	102	140	125	91.9	126	113	19
	HND/HD	75 [100]		138		169	124		152	19
	ND	90 [125]		164		201	148		181	19
	HHD	75 [100]	FRN0217G2□-4G	138		169	124		152	24
	HD	90 [125]		164		201	148		181	24
	HND/ND	110 [150]		201		246	181		222	24
	HHD	90 [125]	FRN0261G2□-4G	164		201	148		181	31
	HD	110 [150]		201	-	246	181	-	222	35
	HND/ND	132 [200]		238		292	214		263	35
	HHD	110 [150]	FRN0290G2□-4G	201		246	181		222	35
	HD	132 [200]		238		292	214		263	42
	HND/ND	160 [250]		286		350	258		315	42
	HHD	132 [200]	FRN0376G2□-4G	238		292	214		263	42
	HD	160 [250]		286		350	258		315	50
	HND/ND	200 [300]		357		437	321		394	50

(Note) □ in the inverter type is replaced by a letter of the alphabet.

□
└ S (basic type), E (type with built-in EMC filter)

- Inverter efficiency is calculated using values suitable for each inverter model. Furthermore, input RMS current is calculated based on the following conditions.

  [FRN0002 to 0060G2□-4G] Power supply capacity: 500 kVA, source impedance: 5%

  [FRN0085 to 1480G2□-4G] Values commensurate with the capacity recommended by Fuji Electric are used for calculating the power supply capacity and source impedance.

- The input RMS currents listed in the above table will vary in inverse proportion to the power supply voltage, such as 380 V.
- The braking circuit current is always constant, independent of braking resistor type (built-in, standard, 10%ED).

Table 11.2-1 Size of current for each part of inverter (cont.)

	Specification	Standard applicable motor (kW) [HP]	Inverter type	50 Hz, 400 V			60 Hz, 440 V			Braking resistor circuit current (A)
				Input RMS current (A) DC reactor (DCR)		DC intermediate circuit current (A)	Input RMS current (A) DC reactor (DCR)		DC intermediate circuit current (A)	
				w/ DCR	w/o DCR		w/ DCR	w/o DCR		
Power system	HHD	160 [250]	FRN0431G2□-4G	286		350	258		315	50
	HD	200 [300]		357		437	321		394	62
	HND/ND	220 [350]		390		478	351		430	62
	HHD	200 [300]	FRN0547G2□-4G	357		437	321		394	62
	HD	220 [350]		390		478	351		430	71
	HND/ND	280 [450]		500		613	450		552	71
	HHD	220 [350]	FRN0610G2□-4G	390		478	351		430	71
	HD	250 [400]		443		543	399		489	100
	HND/ND	315 [500]		559		685	503		617	100
	HHD	280 [400]	FRN0739G2□-4G	500		613	450		552	100
	HD	315 [450]		559		685	503		617	100
	HND	355 [500]		628		770	565		693	100
	ND	400 [600]		705		864	635		778	100
	HHD	315 [450]	FRN0840G2□-4G	559		685	503		617	100
	HD	355 [500]		628		770	565		693	124
	HND	400 [600]		705		864	635		778	100
	ND	450 [700]		789		967	710		870	124
	HHD	355 [500]	FRN1039G2□-4G	628		770	565		693	124
	HD	400 [600]		705		864	635		778	124
	HND	500 [800]		881		1080	793		972	124
	ND	560 [900]		990		1213	891		1092	140
	HHD	400 [600]	FRN1169G2□-4G	705		864	635		778	124
	HD	450 [700]		789		967	710		870	150
	HND	560 [900]		990		1213	891		1092	140
	ND	630 [900]		1115		1367	1004		1230	186
	HHD	500 [800]	FRN1385G2□-4G	881		1080	793		972	186
	HD	560 [900]		990		1213	891		1092	186
	HND	630 [900]		1115		1367	1004		1230	186
	ND	710 [1200]		1256		1539	1130		1385	212
	HHD	630 [900]	FRN1480G2□-4G	1115		1367	1004		1230	212
	HD/HND	710 [1200]		1256		1539	1130		1385	212
	ND	800 [1300]		1415		1734	1274		1560	212

(Note) □ in the inverter type is replaced by a letter of the alphabet.

□
└─ S (basic type), E (type with built-in EMC filter)

- Inverter efficiency is calculated using values suitable for each inverter model. Furthermore, input RMS current is calculated based on the following conditions.

  [FRN0002 to 0060G2□-4G] Power supply capacity: 500 kVA, source impedance: 5%

  [FRN0085 to 1480G2□-4G] Values commensurate with the capacity recommended by Fuji Electric are used for calculating the power supply capacity and source impedance.
- The input RMS currents listed in the above table will vary in inverse proportion to the power supply voltage, such as 380 V.
- The braking circuit current is always constant, independent of braking resistor type (built-in, standard, 10%ED).

11.3 Molded Case Circuit Breakers (MCCB), Earth Leakage Circuit Breakers (ELCB) and Magnetic Contactors (MC)

11.3.1 Function Overview

■ MCCBs and ELCBs*

* With overcurrent protection

Molded Case Circuit Breakers (MCCBs) are designed to provide protection up to the inverter main circuit terminals (three-phase input: L1/R, L2/S, L3/T) from overload or short-circuit, which in turn prevents secondary accidents caused by inverter damage trouble.

Earth Leakage Circuit Breakers (ELCBs) function in the same way as MCCBs, and are connected to protect main circuit wiring to the inverter, and for power supply switching.

Built-in overcurrent/overload protective functions protect the inverter.

■ Magnetic contactor

MCs can be used at both the power input and output sides of the inverter. MCs are used as described below. Use them as necessary. When inserted in the output circuit of the inverter, MCs can also be used for switching the commercial power supply for inverter drive motors.

At the power supply side

MCs at the inverter input side are used in the following cases.

(1) To forcibly cut off the inverter from the power supply with the protective function built into the inverter, or with the external signal input.

(2) To stop the inverter operation in an emergency when unable to input the stop command due to circuit trouble.

(3) To cut off the inverter from the power supply when the MCCB inserted in the power supply side cannot cut it off for maintenance or inspection purpose If using for this purpose only, it is recommended that you use an MC capable of turning the MC ON/OFF manually.

Note

Avoid frequent ON/OFF operation of the magnetic contactor (MC) at the input side (primary side); otherwise, the inverter failure may result.

The frequency of the MC's ON/OFF should not be more than once per 30 minutes. To assure 10-year or longer service life of the inverter, it should not be more than once per hour.

If frequent start/stop of the motor is required, use [FWD]/[REV] terminal signals or the RUN/STOP keys on the inverter keypad.

At the output side

MCs at the inverter output side are used in the following cases.

Prevent externally turned-around current from being applied to the inverter power output terminals ([U], [V], and [W]) unexpectedly. An MC should be used, for example, when a circuit that switches the motor driving power supply between the inverter output and commercial power lines is connected to the inverter.

Tip

If a magnetic contactor (MC) is installed at the inverter output side (secondary side) for switching the motor to a commercial power or for any other purposes, it should be switched on and off when both the inverter and motor are completely stopped. This prevents the contact point from getting damaged due to a switching arc of the MC. Do not equip magnetic contactors with main circuit surge suppression units (Fuji Electric SZ-ZM□, etc.)

Applying a commercial power to the inverter's output (secondary) circuit breaks the inverter. To avoid this, employ an interlock to ensure that the magnetic contactors at the commercial power supply side and inverter output side do not turn ON at the same time.

(2)Drive more than one motor selectively by a single inverter.

(3)Selectively cut off the motor whose thermal overload relay or equivalent devices have been activated.

Driving the motor using commercial power lines

MCs can also be used to switch the power supply of the motor driven by the inverter to a commercial power supply.

Select the MC so as to satisfy the rated currents listed in Table 11.2-1, which are the most critical RMS currents for using the inverter (see Table 11.3-1). For switching the motor drive source between the inverter output and commercial power lines, use the MC of class AC3 specified by JIS C8325 in the commercial line side.

11.3.2 Connection Example and Criteria for Selection of Circuit Breakers

When selecting molded case circuit breaker (MCCB), earth leakage circuit breaker (ELCB) (with overcurrent protection function), and magnetic contactor (MC) connection examples based on Fig. 11.3-1, the required rated current and magnetic contactor types are shown in Table 11.3-1. Table 11.3-2 lists the applicable grades of ELCB sensitivity current.

⚠ WARNING

If connecting to the inverter to the power supply, insert an MCCB or ELCB (with overcurrent protection) recommended for each inverter. Do not use an MCCB or ELCB of a higher rating than that recommended.

Failure to observe this could result in fire.

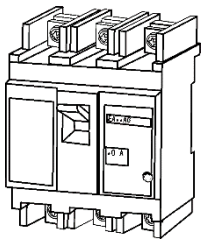

Molded case circuit breaker or earth leakage circuit breaker

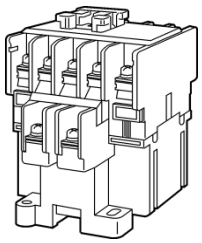

Magnetic contactor

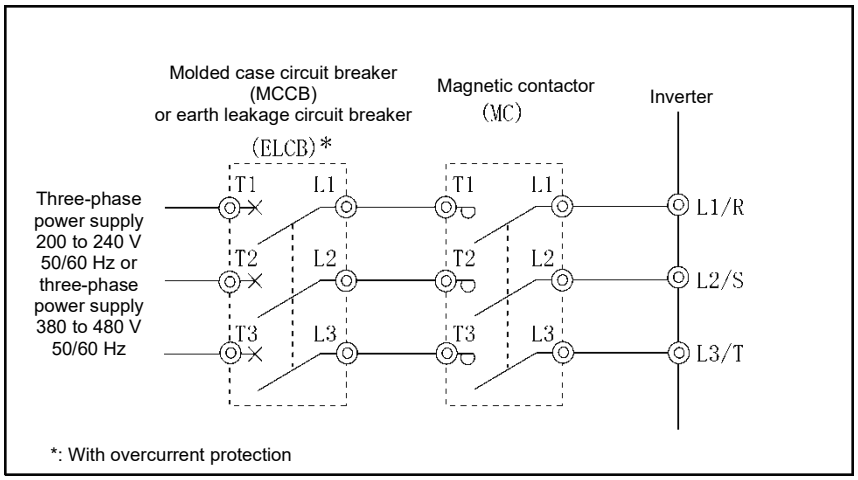

Fig. 11.3-1 External views and connection example for MCCB, ELCB and MC

Table 11.3-1 Molded case circuit breaker (MCCB), earth leakage circuit breaker (ELCB), magnetic contactor (MC)

<table>
<tr><th rowspan="4">Power system</th><th rowspan="4">Standard applicable motor (kW) [HP]</th><th rowspan="4">Inverter type</th><th rowspan="4">Specification</th><th colspan="2">MCCB, ELCB rated current (A)</th><th colspan="4">Magnetic contactor (MC)</th></tr>
<tr><th colspan="2">DC reactors (DCRs)</th><th colspan="2">Input circuit</th><th colspan="2">Output circuit</th></tr>
<tr><th colspan="2"></th><th colspan="2">DC reactors (DCRs)</th><th rowspan="2">HHD specification</th><th rowspan="2">HND specification</th></tr>
<tr><th>w/ DCR</th><th>w/o DCR</th><th>w/ DCR</th><th>w/o DCR</th></tr>
<tr><td rowspan="24">Three-phase 200 V</td><td>0.4 [1/2]</td><td>FRN0003G2S-2G</td><td rowspan="5">HHD</td><td rowspan="2">5</td><td>5</td><td rowspan="6">SC-05</td><td rowspan="2">SC-05</td><td rowspan="5">SC-05</td><td rowspan="6">-</td></tr>
<tr><td>0.75 [1]</td><td>FRN0005G2S-2G</td><td>10</td></tr>
<tr><td>1.5 [2]</td><td>FRN0008G2S-2G</td><td rowspan="2">10</td><td>15</td></tr>
<tr><td>2.2 [3]</td><td>FRN0011G2S-2G</td><td>20</td></tr>
<tr><td>3.7 [5]</td><td>FRN0018G2S-2G</td><td>20</td><td>30</td><td>SC-5-1</td></tr>
<tr><td>5.5 [7.5]</td><td rowspan="2">FRN0032G2S-2G</td><td>HHD</td><td>30</td><td>50</td><td>SC-N1</td><td>SC-4-0</td></tr>
<tr><td rowspan="2">7.5 [10]</td><td>HND</td><td rowspan="2">40</td><td rowspan="2">75</td><td rowspan="2">SC-5-1</td><td rowspan="2">SC-N2</td><td>-</td><td>SC-5-1</td></tr>
<tr><td rowspan="2">FRN0046G2S-2G</td><td>HHD</td><td>SC-N1</td><td>-</td></tr>
<tr><td rowspan="2">11 [15]</td><td>HND</td><td rowspan="2">50</td><td rowspan="2">100</td><td rowspan="2">SC-N1</td><td rowspan="2">SC-N2S</td><td rowspan="2">SC-N1</td><td rowspan="2">SC-N1</td></tr>
<tr><td rowspan="2">FRN0059G2S-2G</td><td>HHD</td></tr>
<tr><td rowspan="2">15 [20]</td><td>HND</td><td rowspan="2">75</td><td rowspan="2">125</td><td rowspan="2">SC-N2</td><td rowspan="2">SC-N3</td><td rowspan="2">SC-N2</td><td rowspan="2">SC-N2</td></tr>
<tr><td rowspan="2">FRN0075G2S-2G</td><td>HHD</td></tr>
<tr><td rowspan="2">18.5 [25]</td><td>HND</td><td rowspan="4">100</td><td rowspan="2">150</td><td rowspan="4">SC-N2S</td><td rowspan="2">SC-N4</td><td rowspan="2">SC-N2S</td><td rowspan="2">SC-N2S</td></tr>
<tr><td rowspan="2">FRN0088G2S-2G</td><td>HHD</td></tr>
<tr><td rowspan="2">22 [30]</td><td>HND</td><td rowspan="2">175</td><td rowspan="2">SC-N5</td><td>-</td><td>SC-N2S</td></tr>
<tr><td rowspan="2">FRN0115G2S-2G</td><td>HHD</td><td>SC-N3</td><td>-</td></tr>
<tr><td rowspan="2">30 [40]</td><td>HND</td><td rowspan="2">150</td><td rowspan="2">200</td><td rowspan="2">SC-N4</td><td rowspan="2">SC-N7</td><td rowspan="2">SC-N4</td><td rowspan="2">SC-N4</td></tr>
<tr><td rowspan="2">FRN0146G2S-2G</td><td>HHD</td></tr>
<tr><td rowspan="2">37 [50]</td><td>HND</td><td rowspan="2">175</td><td rowspan="2">250</td><td rowspan="2">SC-N5</td><td rowspan="4">SC-N8</td><td rowspan="2">SC-N5</td><td rowspan="2">SC-N5</td></tr>
<tr><td rowspan="2">FRN0180G2S-2G</td><td>HHD</td></tr>
<tr><td rowspan="2">45 [60]</td><td>HND</td><td rowspan="2">200</td><td rowspan="2">300</td><td rowspan="2">SC-N7</td><td rowspan="2">SC-N7</td><td rowspan="2">SC-N7</td></tr>
<tr><td rowspan="2">FRN0215G2S-2G</td><td>HHD</td></tr>
<tr><td rowspan="2">55 [75]</td><td>HND</td><td rowspan="2">250</td><td rowspan="2">350</td><td rowspan="2">SC-N8</td><td rowspan="2">SC-N11</td><td rowspan="2">SC-N8</td><td rowspan="2">SC-N8</td></tr>
<tr><td rowspan="2">FRN0288G2S-2G</td><td>HHD</td></tr>
<tr><td rowspan="2">75 [100]</td><td>HND</td><td rowspan="2">350</td><td rowspan="4">-</td><td rowspan="4">SC-N11</td><td rowspan="4">-</td><td>-</td><td>SC-N10</td></tr>
<tr><td rowspan="2">FRN0346G2S-2G</td><td>HHD</td><td>SC-N11</td><td>-</td></tr>
<tr><td rowspan="2">90 [125]</td><td>HND</td><td rowspan="2">400</td><td rowspan="2">SC-N11</td><td rowspan="2">SC-N11</td></tr>
<tr><td rowspan="2">FRN0432G2S-2G</td><td>HHD</td></tr>
<tr><td>110 [150]</td><td>HND</td><td>500</td><td>SC-N12</td><td>-</td><td>SC-N12</td></tr>
</table>

(Note)

- Install the MCCB or ELCB at the input side of the inverter. They cannot be installed at the output side of the inverter.
- The recommended rated current (MCCB and ELCB grounding environment conditions are selected taking the correction factor (0.85) based on ambient temperature conditions into consideration) under panel internal temperature of 50 ºC (122 °F) or less is shown for MCCBs and ELCBs. Select an MCCB or ELCB suitable for the actual short-circuit breaking capacity needed for your power systems.
- HIV wire (tolerant up to 75 ºC (167 °F)) is assumed for the connected wire type when selecting MCs. If selecting MCs with other wire, it will be necessary to select again taking the terminal block size and wire size into consideration.
- Use ELCBs with overcurrent protection.
- To protect your power systems from secondary accidents caused by the broken inverter, use an MCCB or ELCB with the rated current listed in the above table. Do not use a higher rated current than necessary.

Table 11.3-1 Molded case circuit breaker (MCCB), earth leakage circuit breaker (ELCB), magnetic contactor (MC) (cont.)

Power system	Standard applicable motor (kW) [HP]	Inverter type	Specification	MCCB, ELCB rated current (A)		Magnetic contactor (MC)		
						Input circuit		Output circuit
				DC reactor (DCR)		DC reactor (DCR)		HHD/HND/HD/ND specification
				w/ DCR	w/o DCR	w/ DCR	w/o DCR	
Three-phase 400 V	0.4 [1/2]	FRN0002G2□-4G	HHD	5	5	SC-05	SC-05	SC-05
	0.75 [1]	FRN0003G2□-4G						
	1.5 [2]	FRN0004G2□-4G			10			
	2.2 [3]	FRN0006G2□-4G			15			
	3.7 [5]	FRN0009G2□-4G		10	20			
	5.5 [7.5]	FRN0018G2□-4G	HHD	15	30		SC-4-0	
	7.5 [10]		HND	20	40		SC-5-1	SC-05
		FRN0023G2□-4G	HHD					
	11 [15]		HND	30	50		SC-N1	SC-4-0
		FRN0035G2□-4G	HHD					
	15 [20]		HND	40	60	SC-5-1		SC-5-1
		FRN0041G2□-4G	HHD					
	18.5 [25]		HND		75	SC-N1	SC-N2	SC-N1
		FRN0045G2□-4G	HHD					
	22 [30]		HND	50	100		SC-N2S	
		FRN0060G2□-4G	HHD					
	30 [40]		HND	75	125	SC-N2	SC-N3	SC-N2
		FRN0085G2□-4G	HHD					
	37 [50]		HD/HND	100		SC-N2S	SC-N4	SC-N2S
		FRN0105G2□-4G	HHD					
	45 [60]		HD/HND		150	SC-N3		SC-N3
		FRN0085G2□-4G	ND					
		FRN0139G2□-4G	HHD					
	55 [75]		HD/HND	125	200		SC-N5	SC-N4
		FRN0105G2□-4G	ND					
		FRN0179G2□-4G	HHD					
	75 [100]		HD/HND	175	-	SC-N4	-	SC-N5
		FRN0139G2□-4G	ND					
		FRN0217G2□-4G	HHD					
	90 [125]		HD	200		SC-N7		SC-N7
		FRN0179G2□-4G	ND					
		FRN0261G2□-4G	HHD					
	110 [150]		HD	250		SC-N8		SC-N8
		FRN0217G2□-4G	HND/ND					
		FRN0290G2□-4G	HHD					
	132 [200]		HD	300				
		FRN0261G2□-4G	HND/ND					
		FRN0376G2□-4G	HHD					
	160 [250]		HD	350		SC-N11		SC-N11
		FRN0290G2□-4G	HND/ND					
		FRN0431G2□-4G	HHD					
	200 [300]		HD	500		SC-N12		SC-N12
		FRN0376G2□-4G	HND/ND					
		FRN0547G2□-4G	HHD					
	220 [350]		HD					
		FRN0431G2□-4G	HND/ND					
		FRN0610G2□-4G	HHD					
	250 [400]		HD	600				SC-N14
	280 [450]	FRN0547G2□-4G	HND/ND			SC-N14		
	280 [400]	FRN0739G2□-4G	HHD					
	315 [450]		HD	800				
	315 [500]	FRN0610G2□-4G	HND/ND					
	315 [450]	FRN0840G2□-4G	HHD					
	355 [500]		HD					
		FRN0739G2□-4G	HND					
		FRN1039G2□-4G	HHD					
	400 [600]		HD	1200		SC-N16		SC-N16
		FRN0739G2□-4G	ND					
		FRN0840G2□-4G	HND					
		FRN1169G2□-4G	HHD					
	450 [700]		HD					*1
		FRN0840G2□-4G	ND					

	500 [800]	FRN1039G2□-4G	HND	1200		*1		*1
		FRN1385G2□-4G	HHD					
	560 [900]		HD	1400				
		FRN1039G2□-4G	ND					
		FRN1169G2□-4G	HND					
	630 [900]		ND			*2		*2
		FRN1385G2□-4G	HND					
		FRN1480G2□-4G	HHD					
	710 [1200]		HD/HND	1600				
		FRN1385G2□-4G	ND					
	800 [1300]	FRN1480G2□-4G	ND	2000		*3		*3

*1: SC-N12+SZ-SP9 (3 sets)

*2: SC-N14+SZ-SP10 (3 sets)

*3: SC-N16+SZ-SP11 (3 sets)

(Note) □ in the inverter type is replaced by a letter of the alphabet.

□
└ S (basic type), E (type with built-in EMC filter)

Install the MCCB or ELCB at the input side of the inverter. They cannot be installed at the output side of the inverter.

- The recommended rated current (MCCB and ELCB grounding environment conditions are selected taking the correction factor (0.85) based on ambient temperature conditions into consideration) under panel internal temperature of 50 ºC (122 °F) or less is shown for MCCBs and ELCBs. Select an MCCB or ELCB suitable for the actual short-circuit breaking capacity needed for your power systems.
- HIV wire (tolerant up to 75 ºC (167 °F)) is assumed for the connected wire type when selecting MCs. If selecting MCs with other wire, it will be necessary to select again taking the terminal block size and wire size into consideration.
- Use ELCBs with overcurrent protection.
- To protect your power systems from secondary accidents caused by the broken inverter, use an MCCB or ELCB with the rated current listed in the above table. Do not use a higher rated current higher than necessary.

Table 11.3-2 shows the relationship between the ELCB (with overcurrent protection) sensitivity current and wiring length at the output side. Note that the sensitivity levels listed in the table are estimated values based on the results obtained by the test setup in the Fuji laboratory where each inverter drives a single motor.

Table 11.3-2 Application classification for earth leakage breaker (ELCB) sensitivity current

Power system	Standard applicable motor (kW) [HP]	Wire length and sensitivity current					
		10 m	30 m	50 m	100 m	200 m	300 m
Three-phase 200 V	0.4 [1/2]						
	0.75 [1]						
	1.5 [2]						
	2.2 [3]		30 mA				
	3.7 [5]						
	5.5 [7.5]						
	7.5 [10]				100 mA		
	11 [15]						
	15 [20]						
	18.5 [25]					200 mA	
	22 [30]						
	30 [40]						
	37 [50]						
	45 [60]						
	55 [75]						
	75 [100]						500 mA
	90 [125]						
	110 [150]						
Three-phase 400 V	0.4 [1/2]						
	0.75 [1]						
	1.5 [2]						
	2.2 [3]						
	3.7 [5]	30 mA					
	5.5 [7.5]						
	7.5 [10]						
	11 [15]			100 mA			
	15 [20]						
	18.5 [25]						
	22 [30]				200 mA		
	30 [40]						
	37 [50]						
	45 [60]					500 mA	
	55 [75]						
	75 [100]						
	90 [125]						
	110 [150]						
	132 [200]						1000 mA
	160 [250]						(Special)
	200 [300]						
	220 [350]						
	250 [350]						
	280 [400]						
	315 [450]						
	355 [500]						3000 mA
	400 [600]						(Special)
	450 [700]						
	560 [900]						
	630 [900]						
	710 [1000]						
	800 [1300]						

- Values listed above were obtained using Fuji ELCB applied to the test setup.
- The calculation for the power supply grounding is based on single wire grounding with Δ-connection for the 200V series, and neutral grounding with Y-connection for the 400V series.

- Values listed above are calculated based on the earth capacity when 600 V class of vinyl-insulated IV wires are used in a wiring through metal conduit pipes (in contact with ground).
- Wiring length is the total length of wiring between the inverter and motor. When multiple motors are connected to one inverter, the wiring length is the total of all wire lengths.
- If actually measuring leakage current, use a leakage meter with filter.

11.4 Lightning Surge Protection Device SPD

SPDs absorb surge intrusion from wiring, and have the effect of preventing electrical and electronic device damage.

When installing an SPD, it is crucial that the devices being protected and the SPD share the same ground wire.

Fuji Electric boasts a lineup including the CN6 series, which is effective for induced lightning surge intrusion from three-phase 200 V and 400 V power lines, and a CN7 series, which is effective for backflow lightning intrusion from ground wires.

Fig. 11.4-1 shows the external dimensions and a connection example.

Refer to the catalog “Fuji Lightning Surge Protection Device CN6/CN7 Series (HS189)” for details.

These products are available from Fuji Electric Technica Co., Ltd.

(CN6132-K)

(CN72LE)

■ **Three-phase (240/440 VAC)**

●CN6112 ●CN6132 ●CN6134
●CN6212 ●CN6232 ●CN6234

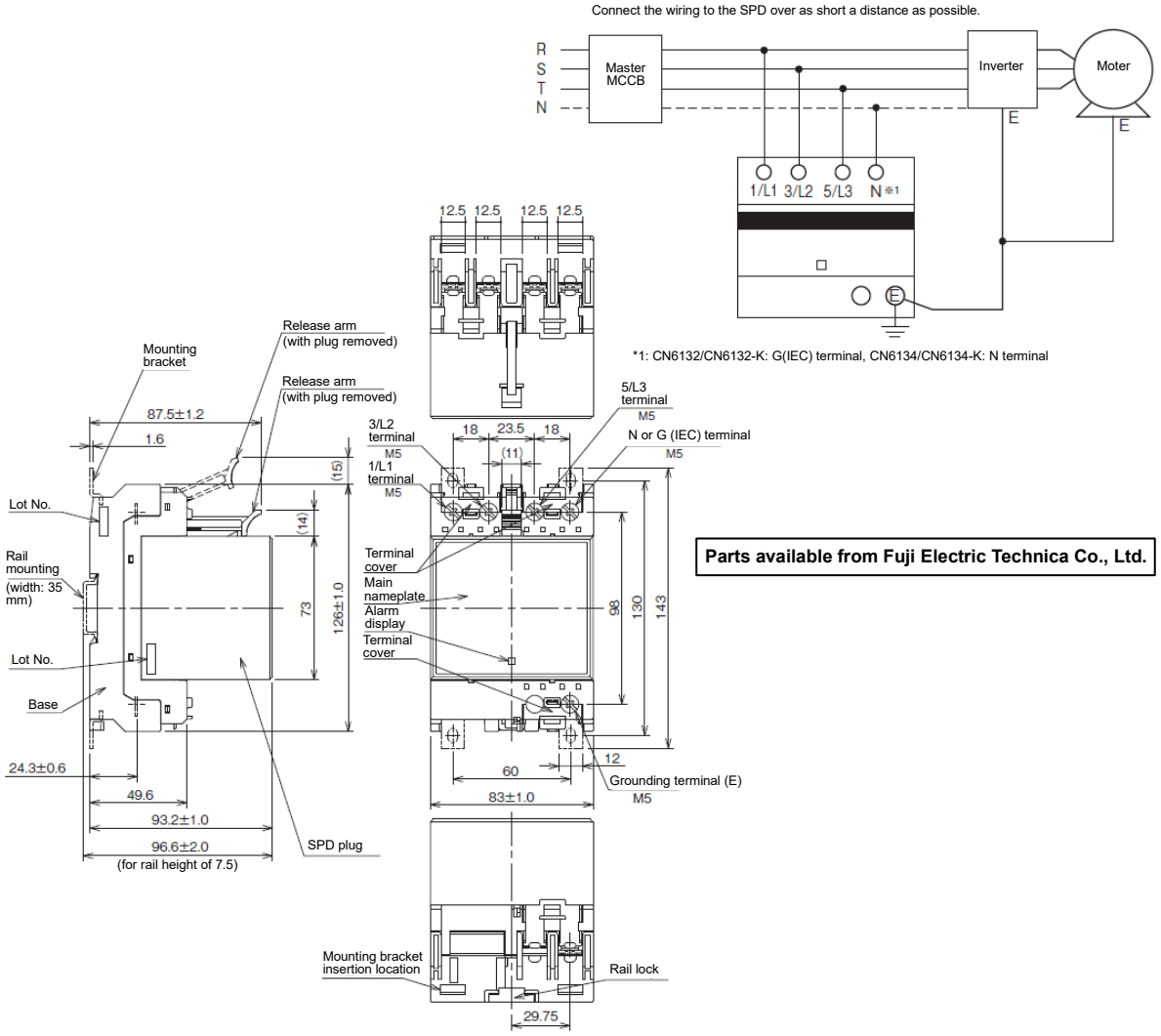

Fig. 11.4-1 Lightning Surge Protection Device (SPD) external dimensions and connection example

11.5 Filter Capacitors for Suppressing AM Radio Band Noise

These capacitors are effective to suppress AM radio band (less than 1 MHz) noise. They are even more effective when used in combination with zero-phase reactors for radio noise suppression.

Applicable models are NFM25M315KPD1 for 200V series inverters and NFM60M315KPD for 400V series inverters. Use one of them regardless of the inverter capacity. Fig. 11.5-1 shows their external dimensions.

These products are available from Fuji Electric Technica Co., Ltd.

* Do not use the surge killer in the inverter secondary (output) line.

■ NFM25M315KPD1 (for 200 V) **■ NFM60M315KPD (for 400 V)**

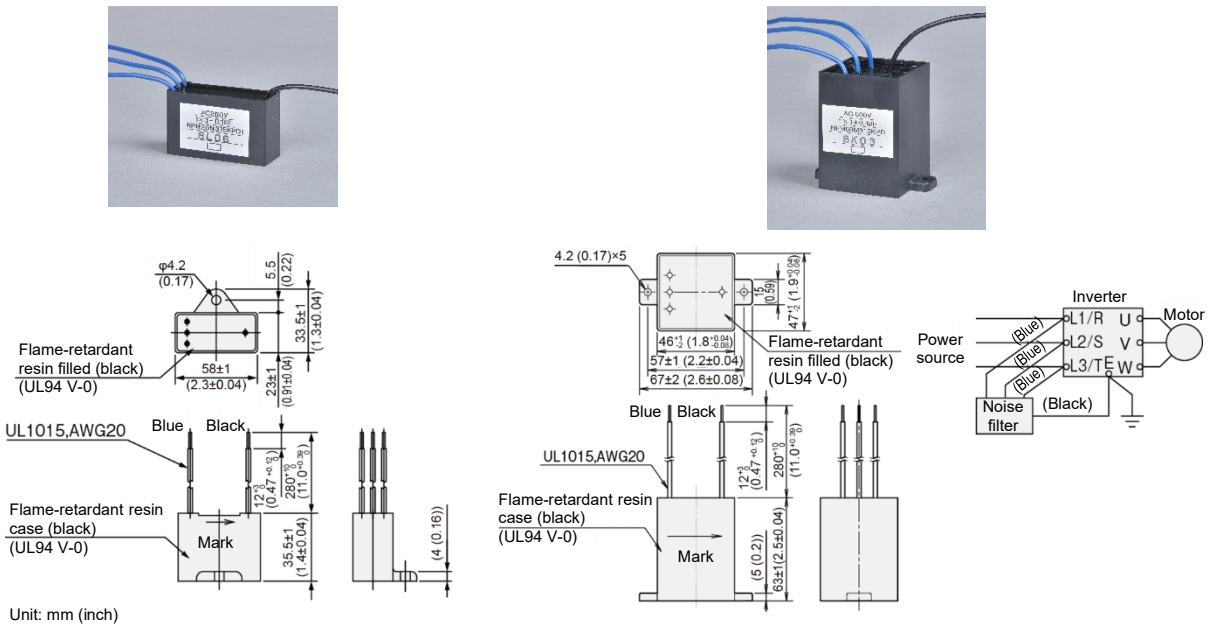

Parts available from Fuji Electric Technica Co., Ltd.

Fig. 11.5-1 External dimensions of filter capacitors for suppressing AM band radio noise

11.6 Braking Resistors (DB) and Braking Units

11.6.1 Selecting a Braking Resistor

If the load inertia is high, or if accelerating or decelerating suddenly to rotate away from the load side, the inverter induces an overvoltage trip (OU) with regenerative energy from the load. Furthermore, if braking resistor overheating (DBH) occurs in models with built-in braking resistor, it means that the built-in braking resistor capacity is insufficient. In such cases, connect an external braking resistor.

[1] Selection procedure

Use within the specification values for the braking resistors indicated in the table in “11.6.3 Specifications” in accordance with “(4) Braking resistor rating” in Chapter 10 “10.2 Selection Procedure”.

[2] Notes on selection

The braking time T_1, cycle period T_0, and duty cycle %ED are converted under deceleration braking conditions based on the rated torque as shown in Fig. 11.6-1. However, it is not necessary to consider these values in the selection of braking resistor capacity.

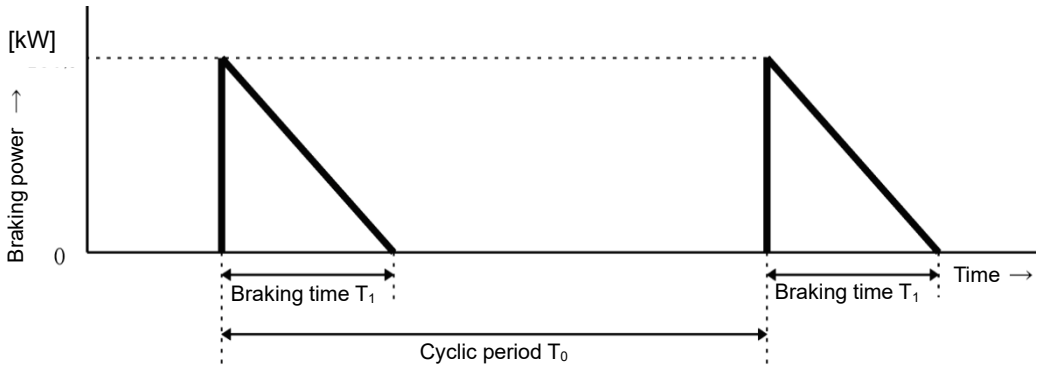

Fig. 11.6-1 Duty cycle

$$\text{Duty cycle (\%ED)} = \frac{T_1}{T_0} \times 100\ (\%)$$

11.6.2 Overview of Braking Resistors (DB) and Braking Units

A braking resistor converts regenerative energy generated from the deceleration of the motor to heat. Use of a braking resistor results in improved deceleration performance of the inverter. FRENIC-MEGA (GS2) 200V series FRN0003 to 0288G2S-2G and 400V series FRN0002 to 0217G2□-4G are equipped with built-in braking resistor drive transistors, allowing braking resistors to be connected directly to the inverter.

[1] Standard type

The standard type is equipped with a function for outputting temperature detection signals. To detect temperature detection signals with FRENIC-MEGA, assign external alarm “THR” to terminal [X1] to [X9], and connect to braking resistor terminal 2 and terminal 1. Upon detection of the warning signal (preset detection level: 150 °C), the inverter displays alarm OH2 on the LED monitor and stops the alarm.

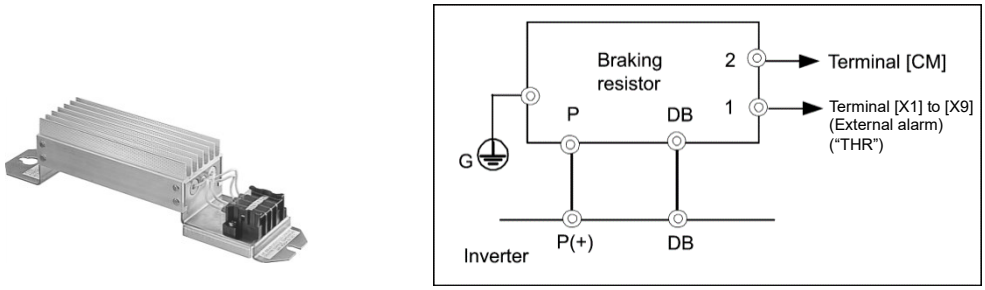

Fig. 11.6-2 Braking resistor (standard type) and connection example

[2] 10%ED type

The 10%ED type is not equipped with a function for outputting temperature detection signals, and therefore it is necessary to specify electronic thermal overload relay function (function code F50, F51, F52) settings for braking resistor protection.

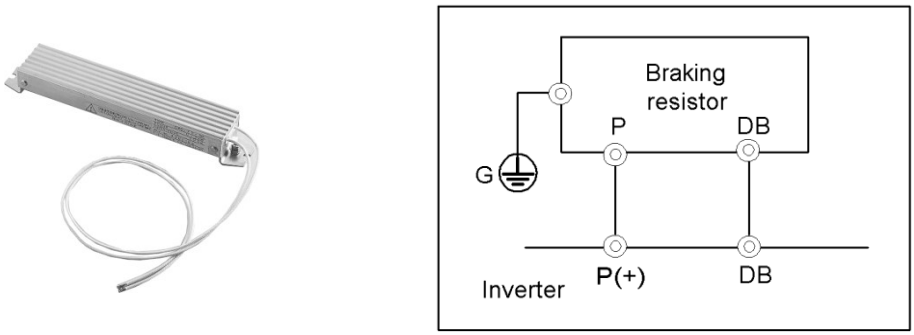

Fig. 11.6-3 Braking resistor (10%ED type) and connection example

For the specifications and external dimensions, refer to “11.6.3 Specification” and “11.6.4 External dimensions”.

[3] Overview of braking unit

To improve the braking ability of inverters with the following capacity, use in combination with a braking resistor.

Inverter capacity

200V series: FRN0346, 0432G2S-2G

400V series: FRN0261 to 1480G2□-4G

200V series FRN0003 to 0288G2S-2G /400V series FRN0002 to 0217G2□-4G are equipped with a built-in brake transistor, and therefore do not need a braking unit.

Fig. 11.6-4 Braking unit

For the specifications and external dimensions of the braking units, refer to “11.6.3 Specification” and “11.6.4 External dimensions”.

11.6.3 Specification

Table 11.6-1 Braking unit generated loss

Type	Generated loss [W] (for 10%ED type)
BU90-2E	50
BU90-4E	30
BU132-4E	40
BU220-4E	60

Table 11.6-2 Braking units, braking resistors (standard type) for HHD specification

Power system	Standard applicable motor (kW) [HP]	Inverter type	Option					Maximum braking torque (%)			Continuous braking (100% braking torque)		Repetitive braking (each cycle is 100 s or less)	
			Braking unit		Breaking resistor									
		HHD specification	Type	Qty	Type	Qty	Resistance (Ω)		50 Hz (N·m)	60 Hz (N·m)	Discharge withstand current rating (kWs)	Braking time (s)	Average allowable loss (kW)	Duty cycle (%ED)
Three-phase 200 V	0.4 [1/2]	FRN0003G2S-2G	-		DB0.75-2	1	100	150	4.02	3.32	9	45	0.044	22
	0.75 [1]	FRN0005G2S-2G							7.57	6.25	17	45	0.068	18
	1.5 [2]	FRN0008G2S-2G			DB2.2-2	1	40		15	12.4	34	45	0.075	10
	2.2 [3]	FRN0011G2S-2G							22	18.2	33	30	0.077	7
	3.7 [5]	FRN0018G2S-2G			DB3.7-2	1	33		37.1	30.5	37	20	0.093	5
	5.5 [7.5]	FRN0032G2S-2G			DB5.5-2	1	20		54.3	45	55	20	0.138	5
	7.5 [10]	FRN0046G2S-2G			DB7.5-2	1	15		73.6	61.6	38	10	0.188	5
	11 [15]	FRN0059G2S-2G			DB11-2	1	10		108	89.5	55	10	0.275	5
	15 [20]	FRN0075G2S-2G			DB15-2	1	8.6		147	122	75	10	0.375	5
	18.5 [25]	FRN0088G2S-2G			DB18.5-2	1	6.8		182	151	92	10	0.463	5
	22 [30]	FRN0115G2S-2G			DB22-2	1	5.8		216	179	88	8	0.55	5
	30 [40]	FRN0146G2S-2G			DB30-2C	1	4	100	195	162	150	10	1.50	10
	37 [50]	FRN0180G2S-2G			DB37-2C	1	3		240	200	185	10	1.85	10
	45 [60]	FRN0215G2S-2G			DB45-2C	1	2.5		292	243	225	10	2.25	10
	55 [75]	FRN0288G2S-2G			DB55-2C	1	2		359	298	275	10	2.75	10
	75 [100]	FRN0346G2S-2G	BU90-2E	1	DB75-2C	1	1.6		487	405	375	10	3.75	10
	90 [125]	FRN0432G2S-2G			DB110-2C	1	1.2		585	486	450	10	4.50	10
Three-phase 400 V	0.4 [1/2]	FRN0002G2□-4G	-		DB0.75-4	1	200	150	4.02	3.32	9	45	0.044	22
	0.75 [1]	FRN0003G2□-4G							7.57	6.25	17	45	0.068	18
	1.5 [2]	FRN0004G2□-4G			DB2.2-4	1	160		15	12.4	34	45	0.075	10
	2.2 [3]	FRN0006G2□-4G							22	18.2	33	30	0.077	7
	3.7 [5]	FRN0009G2□-4G			DB3.7-4	1	130		37.1	30.5	37	20	0.093	5
	5.5 [7.5]	FRN0018G2□-4G			DB5.5-4	1	80		54.3	45	55	20	0.138	5
	7.5 [10]	FRN0023G2□-4G			DB7.5-4	1	60		73.6	61.6	38	10	0.188	5
	11 [15]	FRN0035G2□-4G			DB11-4	1	40		108	89.5	55	10	0.275	5
	15 [20]	FRN0041G2□-4G			DB15-4	1	34.4		147	122	75	10	0.375	5
	18.5 [25]	FRN0045G2□-4G			DB18.5-4	1	27		182	151	93	10	0.463	5
	22 [30]	FRN0060G2□-4G			DB22-4	1	22		216	179	88	8	0.55	5
	30 [40]	FRN0085G2□-4G			DB30-4C	1	15	100	195	162	150	10	1.50	10
	37 [50]	FRN0105G2□-4G			DB37-4C	1	12		240	200	185	10	1.85	10
	45 [60]	FRN0139G2□-4G			DB45-4C	1	10		292	243	225	10	2.25	10
	55 [75]	FRN0179G2□-4G			DB55-4C	1	7.5		359	298	275	10	2.75	10
	75 [100]	FRN0217G2□-4G			DB75-4C	1	6.5		487	405	375	10	3.75	10
	90 [150]	FRN0261G2□-4G	BU90-4E	1	DB110-4C	1	4.7		585	486	450	10	4.50	10
	110 [150]	FRN0290G2□-4G	BU132-4E	1					712	592	550	10	5.50	10
	132 [200]	FRN0376G2□-4G			DB132-4C	1	3.9		855	710	660	10	6.60	10
	160 [250]	FRN0431G2□-4G	BU220-4E	1	DB160-4C	1	3.2		1036	861	800	10	8.00	10
	200 [300]	FRN0547G2□-4G			DB200-4C	1	2.6		1295	1076	1000	10	10.0	10
	220 [350]	FRN0610G2□-4G			DB220-4C	1	2.2		1424	1184	1100	10	11.0	10
	280 [400]	FRN0739G2□-4G		2	DB160-4C	2	1.6		1813	1506	1400	10	14.0	10
	315 [450]	FRN0840G2□-4G							2039	1695	1575	10	15.8	10
	355 [500]	FRN1039G2□-4G			DB200-4C		1.3		2298	1910	1775	10	17.8	10
	400 [600]	FRN1169G2□-4G							2590	2152	2000	10	20.0	10
	500 [800]	FRN1385G2□-4G		3		3	0.867		3237	2691	2500	10	25.0	10
	630 [900]	FRN1480G2□-4G			DB220-4C		0.733		4090	3408	3150	10	31.5	10

(Note) □ in the inverter type is replaced by a letter of the alphabet.

□
└ S (basic type), E (type with built-in EMC filter)

Table 11.6-3 Braking units, braking resistors (standard type) for HND specification

Power system	Standard applicable motor (kW) [HP]	Inverter type	Option					Maximum braking torque (%)			Continuous braking		Repetitive braking (each cycle is 100 s or less)	
			Braking unit		Breaking resistor									
		HND specification	Type	Qty	Type	Qty	Resistance (Ω)		50 Hz (N·m)	60 Hz (N·m)	Discharge withstand current rating (kWs)	Braking time (s)	Average allowable loss (kW)	Duty cycle (%ED)
Three-phase 200 V	7.5 [10]	FRN0032G2S-2G	-		DB5.5-2	1	20	100	49.1	41	55	15	0.138	3.5
	11 [15]	FRN0046G2S-2G			DB7.5-2	1	15		72	59.7	38	7	0.188	3.5
	15 [20]	FRN0059G2S-2G			DB11-2	1	10		98.1	81.4	55	7	0.275	3.5
	18.5 [25]	FRN0075G2S-2G			DB15-2	1	8.6		121	100	75	8	0.375	4
	22 [30]	FRN0088G2S-2G			DB18.5-2	1	6.8		144	119	92	8	0.463	4
	30 [40]	FRN0115G2S-2G			DB22-2	1	5.8		216	179	88	6	0.55	3.5
	37 [50]	FRN0146G2S-2G			DB30-2C	1	4	75	180	150	150	10	1.50	10
	45 [60]	FRN0180G2S-2G			DB37-2C	1	3		219	182	185	10	1.85	10
	55 [75]	FRN0215G2S-2G			DB45-2C	1	2.5		269	223	225	10	2.25	10
	75 [100]	FRN0288G2S-2G			DB55-2C	1	2		365	303	275	10	2.75	10
	90 [125]	FRN0346G2S-2G	BU90-2E	1	DB75-2C	1	1.6		439	364	375	10	3.75	10
	110 [150]	FRN0432G2S-2G			DB110-2C	1	1.2		534	444	450	10	4.50	10
Three-phase 400 V	7.5 [10]	FRN0018G2□-4G	-		DB5.5-4	1	80	100	49.6	41	55	15	0.138	3.5
	11 [15]	FRN0023G2□-4G			DB7.5-4	1	60		72	59.7	38	7	0.188	3.5
	15 [20]	FRN0035G2□-4G			DB11-4	1	40		98.1	81.4	55	7	0.275	3.5
	18.5 [25]	FRN0041G2□-4G			DB15-4	1	34.4		121	100	75	8	0.375	4
	22 [30]	FRN0045G2□-4G			DB18.5-4	1	27		144	119	93	8	0.463	4
	30 [40]	FRN0060G2□-4G			DB22-4	1	22		195	162	88	6	0.55	3.5
	37 [50]	FRN0085G2□-4G			DB30-4C	1	15	75	180	150	150	10	1.50	10
	45 [60]	FRN0105G2□-4G			DB37-4C	1	12		219	182	185	10	1.85	10
	55 [75]	FRN0139G2□-4G			DB45-4C	1	10		269	223	225	10	2.25	10
	75 [100]	FRN0179G2□-4G			DB55-4C	1	7.5		365	303	275	10	2.75	10
	110 [150]	FRN0217G2□-4G			DB75-4C	1	6.5		534	444	375	10	3.75	10
	132 [200]	FRN0261G2□-4G	BU132-4E	1	DB110-4C	1	4.7		641	533	550	10	5.50	10
	160 [200]	FRN0290G2□-4G			DB132-4C	1	3.9		777	646	660	10	6.60	10
	200 [300]	FRN0376G2□-4G	BU220-4E	1	DB160-4C	1	3.2		971	807	800	10	8.00	10
	220 [350]	FRN0431G2□-4G			DB200-4C	1	2.6		1068	888	1000	10	10.0	10
	280 [450]	FRN0547G2□-4G			DB220-4C	1	2.2		1360	1130	1100	10	11.0	10
	315 [500]	FRN0610G2□-4G		2	DB160-4C	2	1.6		1529	1271	1250	10	12.5	10
	355 [500]	FRN0739G2□-4G							1724	1433	1400	10	14.0	10
	400 [600]	FRN0840G2□-4G							1942	1614	1775	10	17.8	10
	500 [700]	FRN1039G2□-4G			DB200-4C		1.3		2428	2018	2000	10	20.0	10
	560 [800]	FRN1169G2□-4G			DB220-4C		1.1		2719	2260	2200	10	22.0	10
	630 [900]	FRN1385G2□-4G		3	DB200-4C	3	0.867		3067	2556	2500	10	25.0	10
	710 [1000]	FRN1480G2□-4G			DB220-4C		0.733		3457	2881	3150	10	31.5	10

(Note) □ in the inverter type is replaced by a letter of the alphabet.

□
└ S (basic type), E (type with built-in EMC filter)

Table 11.6-4 Braking units, braking resistors (standard type) for HD specification

Power system	Standard applicable motor (kW) [HP]	Inverter type	Option					Maximum braking torque (%)			Continuous braking		Repetitive braking (each cycle is 100 s or less)	
			Braking unit		Breaking resistor									
		HD specification	Type	Qty	Type	Qty	Resistance (Ω)		50 Hz (N·m)	60 Hz (N·m)	Discharge withstand current rating (kWs)	Braking time (s)	Average allowable loss (kW)	Duty cycle (%ED)
Three-phase 400 V	37 [50]	FRN0085G2□-4G	-		DB30-4C	1	15	75	180	150	150	10	1.50	10
	45 [60]	FRN0105G2□-4G			DB37-4C	1	12		219	182	185	10	1.85	10
	55 [75]	FRN0139G2□-4G			DB45-4C	1	10		269	223	225	10	2.25	10
	75 [100]	FRN0179G2□-4G			DB55-4C	1	7.5		365	303	275	10	2.75	10
	90 [150]	FRN0217G2□-4G			DB75-4C	1	6.5		439	364	375	10	3.75	10
	110 [150]	FRN0261G2□-4G	BU132-4E	1	DB110-4C	1	4.7	100	712	592	550	10	5.50	10
	132 [200]	FRN0290G2□-4G			DB132-4C	1	3.9		855	710	660	10	6.60	10
	160 [250]	FRN0376G2□-4G	BU220-4E	1	DB160-4C	1	3.2		1036	861	800	10	8.00	10
	200 [300]	FRN0431G2□-4G			DB200-4C	1	2.6		1295	1076	1000	10	10.0	10
	220 [350]	FRN0547G2□-4G			DB220-4C	1	2.2		1424	1184	1100	10	11.0	10
	250 [400]	FRN0610G2□-4G	BU132-4E	2	DB132-4C	2	1.95		1623	1352	1250	10	12.5	10
	315 [450]	FRN0739G2□-4G	BU220-4E	2	DB160-4C	2	1.6		2039	1695	1575	10	15.8	10
	355 [500]	FRN0840G2□-4G			DB200-4C	2	1.3		2298	1910	1775	10	17.5	10
	400 [600]	FRN1039G2□-4G							2590	2152	2000	10	20.0	10
	450 [700]	FRN1169G2□-4G		3	DB160-4C	3	1.067		2913	2421	2250	10	22.5	10
	560 [900]	FRN1385G2□-4G			DB200-4C	3	0.867		3600	3004	2800	10	28.0	10
	710 [1200]	FRN1480G2□-4G			DB220-4C	3	0.733		4609	3841	3300	9	33.0	9

(Note) □ in the inverter type is replaced by a letter of the alphabet.

□
└ S (basic type), E (type with built-in EMC filter)

Table 11.6-5 Braking units, braking resistors (standard type) for ND specification

Power system	Standard applicable motor (kW) [HP]	Inverter type	Option					Maximum braking torque (%)			Continuous braking		Repetitive braking (each cycle is 100 s or less)	
			Braking unit		Breaking resistor									
		ND specification	Type	Qty	Type	Qty	Resistance (Ω)		50 Hz (N·m)	60 Hz (N·m)	Discharge withstand current rating (kWs)	Braking time (s)	Average allowable loss (kW)	Duty cycle (%ED)
Three-phase 400 V	45 [60]	FRN0085G2□-4G	-		DB30-4C	1	15	60	175	146	150	10	1.50	10
	55 [75]	FRN0105G2□-4G			DB37-4C	1	12		215	179	185	10	1.85	10
	75 [100]	FRN0139G2□-4G			DB45-4C	1	10		292	243	225	10	2.25	10
	90 [125]	FRN0179G2□-4G			DB55-4C	1	7.5		351	291	275	10	2.75	10
	110 [150]	FRN0217G2□-4G			DB75-4C	1	6.5		427	355	375	10	3.75	10
	132 [200]	FRN0261G2□-4G	BU132-4E	1	DB110-4C	1	4.7	75	641	533	550	10	5.50	10
	160 [200]	FRN0290G2□-4G			DB132-4C	1	3.9		777	646	660	10	6.60	10
	200 [300]	FRN0376G2□-4G	BU220-4E	1	DB160-4C	1	3.2		971	807	800	10	8.00	10
	220 [350]	FRN0431G2□-4G			DB200-4C	1	2.6		1068	888	1000	10	10.0	10
	280 [450]	FRN0547G2□-4G			DB220-4C	1	2.2		1360	1130	1100	10	11.0	10
	315 [500]	FRN0610G2□-4G		2	DB160-4C	2	1.6		1529	1271	1400	10	14.0	10
	400 [600]	FRN0739G2□-4G							1942	1614	1600	10	1.60	10
	450 [700]	FRN0840G2□-4G			DB200-4C	2	1.3		2185	1816	1775	10	17.5	10
	560 [900]	FRN1039G2□-4G			DB220-4C	2	1.1		2700	2253	2200	10	22.0	10
	630 [900]	FRN1169G2□-4G		3	DB200-4C	3	0.867		3067	2556	2500	10	25.0	10
	710 [1200]	FRN1385G2□-4G			DB220-4C	3	0.733		3457	2881	3150	10	31.5	10
	800 [1300]	FRN1480G2□-4G							3858	3219	3150	10	31.5	10

(Note) □ in the inverter type is replaced by a letter of the alphabet.

□
└ S (basic type), E (type with built-in EMC filter)

Table 11.6-6 Braking resistors (10%ED type) for HHD specification

Power system	Standard applicable motor (kW) [HP]	Inverter type	Option: Breaking resistors			Maximum braking torque (%)			Continuous braking (100% braking torque)		Repetitive braking (each cycle is 100 s or less)	
		HHD specification	Type	Qty	Resistance (Ω)		50 Hz (N·m)	60 Hz (N·m)	Discharge withstand current rating (kWs)	Braking time (s)	Average allowable loss (kW)	Duty cycle (%ED)
Three-phase 200 V	0.4 [1/2]	FRN0003G2S-2G	DB0.75-2C	1	100	150	4.02	3.32	50	250	0.075	37
	0.75 [1]	FRN0005G2S-2G					7.57	6.25	50	133	0.075	20
	1.5 [2]	FRN0008G2S-2G	DB2.2-2C	1	40		15	12.4	55	73	0.110	14
	2.2 [3]	FRN0011G2S-2G					22	18.2	55	50	0.110	10
	3.7 [5]	FRN0018G2S-2G	DB3.7-2C	1	33		37.1	30.5	140	75	0.185	
	5.5 [7.5]	FRN0032G2S-2G	DB5.5-2C	1	20		54.3	45	55	20	0.275	
	7.5 [10]	FRN0046G2S-2G	DB7.5-2C	1	15		73.6	61.6	37	10	0.375	
	11 [15]	FRN0059G2S-2G	DB11-2C	1	10		108	89.5	55	10	0.55	
	15 [20]	FRN0075G2S-2G	DB15-2C	1	8.6		147	122	75	10	0.75	
	18.5 [25]	FRN0088G2S-2G	DB22-2C	1	5.8		182	151	92	10	0.925	
	22 [30]	FRN0115G2S-2G					216	179	110	10	1.1	
Three-phase 400 V	0.4 [1/2]	FRN0002G2□-4G	DB0.75-4C	1	200	150	4.02	3.32	50	250	0.075	37
	0.75 [1]	FRN0003G2□-4G					7.57	6.25	50	133	0.075	20
	1.5 [2]	FRN0004G2□-4G	DB2.2-4C	1	160		15	12.4	55	73	0.110	14
	2.2 [3]	FRN0006G2□-4G					22	18.2	55	50	0.110	10
	3.7 [5]	FRN0009G2□-4G	DB3.7-4C	1	130		37.1	30.5	140	75	0.185	
	5.5 [7.5]	FRN0018G2□-4G	DB5.5-4C	1	80		54.3	45	55	20	0.275	
	7.5 [10]	FRN0023G2□-4G	DB7.5-4C	1	60		73.6	61.6	37	10	0.375	
	11 [15]	FRN0035G2□-4G	DB11-4C	1	40		108	89.5	55	10	0.55	
	15 [20]	FRN0041G2□-4G	DB15-4C	1	34.4		147	122	75	10	0.75	
	18.5 [25]	FRN0045G2□-4G	DB22-4C	1	22		182	151	92	10	0.925	
	22 [30]	FRN0060G2□-4G					216	179	110	10	1.1	

Note The 10%ED type is not equipped with a function for outputting temperature detection signals, and therefore it is necessary to specify electronic thermal overload relay function (function code F50, F51, F52) settings for braking resistor protection.

(Note) □ in the inverter type is replaced by a letter of the alphabet.

□
└ S (basic type), E (type with built-in EMC filter)

Table 11.6-7 Braking resistors (10%ED type) for HND specification

Power system	Standard applicable motor (kW) [HP]	Inverter type	Option: Breaking resistors			Maximum braking torque (%)			Continuous braking (100% braking torque)		Repetitive braking (each cycle is 100 s or less)	
		HND specification	Type	Qty	Resistance (Ω)		50 Hz (N·m)	60 Hz (N·m)	Discharge withstand current rating (kWs)	Braking time (s)	Average allowable loss (kW)	Duty cycle (%ED)
Three-phase 200 V	7.5 [10]	FRN0032G2S-2G	DB5.5-2C	1	20	100	49.6	41	55	15	0.275	10
	11 [15]	FRN0046G2S-2G	DB7.5-2C	1	15		72	59.7	37	7	0.375	10
	15 [20]	FRN0059G2S-2G	DB11-2C	1	10		98.1	81.4	55	7	0.55	10
	18.5 [25]	FRN0075G2S-2G	DB15-2C	1	8.6		121	100	75	7	0.75	7
	22 [30]	FRN0088G2S-2G	DB22-2C	1	5.8		144	119	93	7	0.925	7
	30 [40]	FRN0115G2S-2G					195	162	110	7	1.1	7
Three-phase 400 V	7.5 [10]	FRN0018G2□-4G	DB5.5-4C	1	80	100	49.6	41	55	15	0.275	10
	11 [15]	FRN0023G2□-4G	DB7.5-4C	1	60		72	59.7	38	7	0.375	10
	15 [20]	FRN0035G2□-4G	DB11-4C	1	40		98.1	81.4	55	7	0.55	10
	18.5 [25]	FRN0041G2□-4G	DB15-4C	1	34.4		121	100	75	7	0.75	7
	22 [30]	FRN0045G2□-4G	DB22-4C	1	22		144	119	93	7	0.925	7
	30 [40]	FRN0060G2□-4G					195	162	110	7	1.1	7

Note The 10%ED type is not equipped with a function for outputting temperature detection signals, and therefore it is necessary to specify electronic thermal overload relay function (function code F50, F51, F52) settings for braking resistor protection.

(Note) □ in the inverter type is replaced by a letter of the alphabet.

□
└ S (basic type), E (type with built-in EMC filter)

11.6.4 External dimensions

Breaking resistors (standard type)

Figure A Figure B Figure C

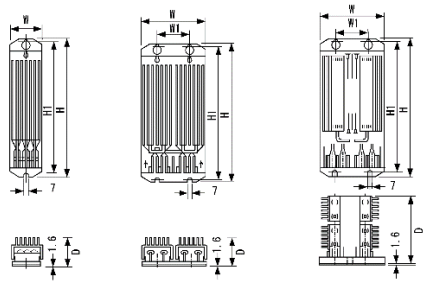

Figure D

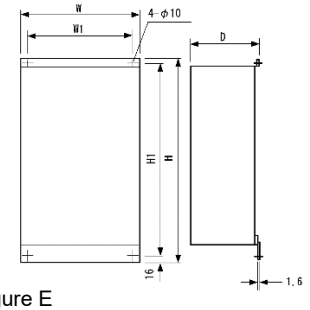

Figure E

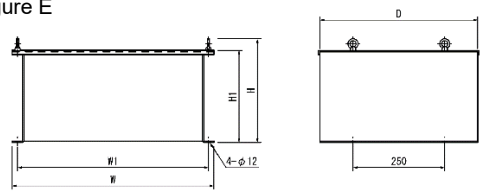

Voltage	Type	Figure	Dimensions [mm]					Approx. weight [kg]
			W	W1	H	H1	D	
200V series	DB0.75-2	A	68	-	310	295	67	1.3
	DB2.2-2	A	80		345	332	94	2.0
	DB3.7-2	A	80		345	332	94	2.0
	DB5.5-2	B	146	90	450	430	67.5	4.5
	DB7.5-2	B	160	90	390	370	90	5.0
	DB11-2	C	142	74	430	415	160	6.9
	DB15-2	C	142	74	430	415	160	6.9
	DB18.5-2	C	142	74	510	495	160	8.7
	DB22-2	C	142	74	510	495	160	8.7
	DB30-2C	D	400	368	660	628	140	10
	DB37-2C	D					240	13
	DB45-2C	D						18
	DB55-2C		405		750	718		22
	DB75-2C	E	450	420	283	240	440	35
	DB110-2C		550	520				32
400V series	DB0.75-4	A	68	-	310	295	67	1.3
	DB2.2-4		68		470	455	67	2.0
	DB3.7-4		68		470	455	67	1.7
	DB5.5-4	B	146	74	470	455	67	4.5
	DB7.5-4		146	74	510	495	67	5.0
	DB11-4	C	142	74	430	415	160	6.9
	DB15-4	C	142	74	430	415	160	6.9
	DB18.5-4	C	142	74	510	495	160	8.7
	DB22-4	C	142	74	510	495	160	8.7
	DB30-4C	D	420	388	660	628	140	11
	DB37-4C	D					240	14
	DB45-4C	D						19
	DB55-4C		425		750	718		21
	DB75-4C	E	550	520	283	240	440	26
	DB110-4C							30
	DB132-4C		650	620				41
	DB160-4C		750	720				57
	DB200-4C							43
	DB220-4C*		600	570				74

* DB220-4C should be in pairs. The dimensions above are for one unit.

Fig. 11.6-5

Braking resistors (10%ED type)

Figure A Figure B Figure C Figure D

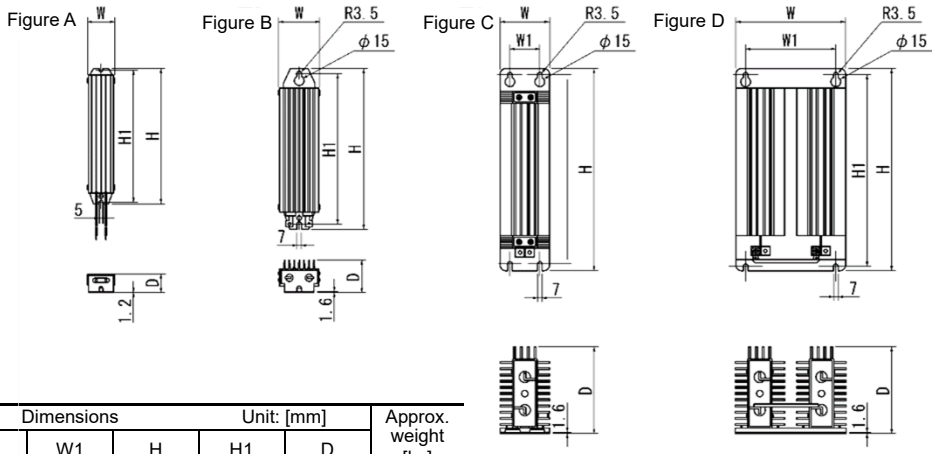

Type	Figure	Dimensions				Unit: [mm]	Approx. weight [kg]
		W	W1	H	H1	D	
DB0.75-2C/4C	A	43	-	221	215	30.5	0.4
DB2.2-2C/4C	B	67	-	188	172	55	0.8
DB3.7-2C/4C	B	67	-	328	312	55	1.4
DB5.5-2C/4C	B	80	-	378	362	78	2.6
DB7.5-2C/4C	B	80	-	418	402	78	2.8
DB11-2C/4C	C	80	50	460	440	140	4.3
DB15-2C/4C	C	80	50	580	560	140	5.6
DB22-2C/4C	D	180	144	400	383	145	8.4

Fig. 11.6-6

Braking unit

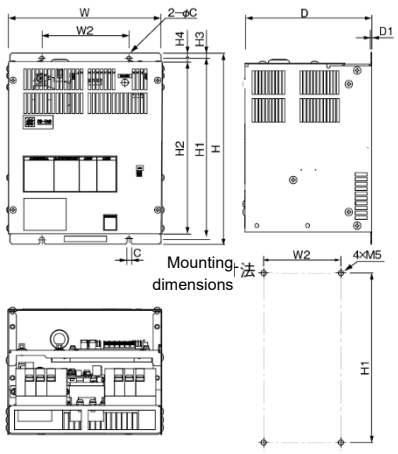

Voltage	Type	Dimensions [mm]						Approx. weight [kg]
		W	W1	H	H1	H2	D	
200V series	BU90-2E	250	150	370	355	340	160	9
400V series	BU90-4E	230	130	280	265	250	160	5.5
	BU132-4E	250	150	370	355	340		9
	BU220-4E			450	435	420		13

Fig. 11.6-7

Braking unit fan unit

By using this option, the duty cycle [%ED] can be improved from 10%ED to 30%ED.

■ Fan unit

●BU-F

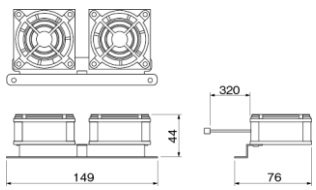

■ Braking unit + Fan unit

● BU90 to 220 - 2EF/4EF

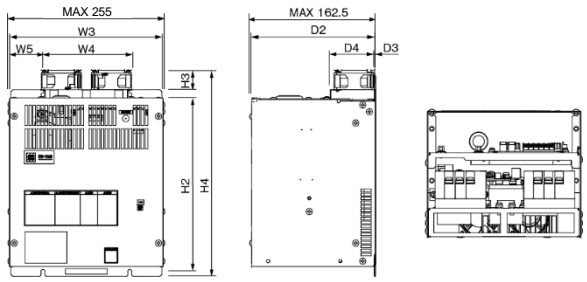

Voltage	Type	Dimensions					Unit: [mm]			
		W2	W3	W4	H2	H3	H4	D2	D3	D4
200V series	BU90-2EF	250	135	57.5	370	30	400	160	1.2	64
400V series	BU90-4EF	230	135	47.5	280	30	310	160	1.2	64
	BU132-4EF	250		57.5	370		400			
	BU220-4EF				450		480			

Fig. 11.6-8

11.7 High Power Factor Power Supply Regeneration PWM Converters (RHC Series)

11.7.1 Overview

■ Compliance with harmonic suppression guidelines

To convert power supply side current to a sine wave with PWM control in order to significantly reduce harmonic current, conversion factor Ki in the "Guideline for Suppressing Harmonics by Customers Receiving High Voltage or Special High Voltage" issued by the Agency for Natural Resources and Energy in the Ministry of Economy, Trade and Industry can be handled as "0" (in other words, zero harmonics are produced.)

■ Reducing the power supply equipment capacity

Current is supplied with the same phase as the power supply phase voltage with power factor control, allowing operation to be performed with a power factor of approximately 1.
Consequently, the power supply transformer capacity and devices can be reduced in size over standard type inverters.

■ Significantly improved braking ability

Regenerative energy when performing high-frequency acceleration and deceleration operation, or when running equipment such as elevators is all generated at the power supply side. This delivers energy-saving benefits when energy is regenerated.
Furthermore, the current waveform when energy is regenerated becomes a sine wave, eliminating any concerns of trouble with the power supply system.

Continuous regeneration rating	100%
1 minute regeneration rating	150% MD (CT) specification 120% LD (VT) specification

■ Extensive protection and maintenance functions

(1) Past alarms can be searched using the segment LED. This allows the cause of alarms to easily analyzed, and countermeasures to be easily employed.

(2) Gate turn-off is performed when a momentary power failure occurs, allowing operation to be resumed quickly once power is restored.

(3) Users can be warned of converter trips beforehand with early warning signals when overloads or fin overheating occurs, or when the high power factor power supply regeneration PWM converter service life is reached.

Input current waveform comparison

(Without PWM converter) (With PWM converter)

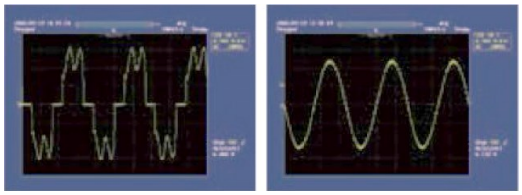

Permissible characteristics

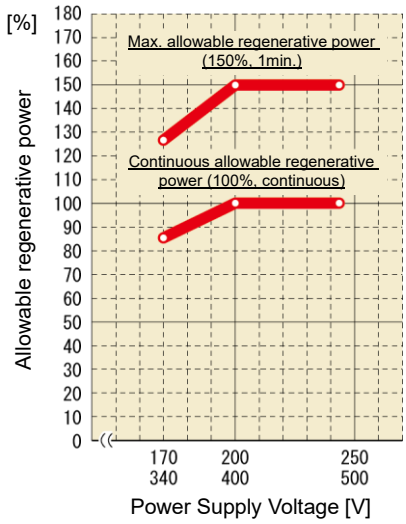

■ Extensive network support

The FRENIC-RHC series can be connected to MICREX-SX and CC-Link master devices. (Option)

■ FRENIC-RHC, FRENIC-eRHC two series lineup

The FRENIC-RHC series lineup comprises large-capacity models compatible with large-scale systems, (capacity range 200 V: 30kW to 90kW , 400 V: 45kW to 630kW)
and the FRENIC-eRHC series lineup comprises more compact models than the conventional models.

Fuji Electric also offers a lineup of small-capacity models.
(Capacity range 200 V: 5.5kW to 22kW , 400 V: 5.5kW to 75kW)

Note If an old inverter (FRENIC5000VG7S, FRENIC5000G11S) combined with RHC series is replaced by FRENIC-MEGA, it might be necessary to make changes to the wiring. Refer to "APPENDIX H" for details.

11.7.2 Specification

[1] Standard specification

MD (CT) specification (for medium overloads)

Three-phase 200 V input series (unit type)

Item		Specification					
Type: RHC□-2EJ		30	37	45	55	75	90
Applicable inverter capacity [kW]		30	37	45	55	75	90
Output	Continuous capacity [kW]	36	44	53	65	88	103
	Overload rating	Continuous rating of 150%-1 min					
	Voltage	320 to 355 VDC (varies based on input voltage) (*2)					
Input power supply	Main power supply Number of phases, voltage, frequency	Three-phase three-wire system, 200 to 220 V/50 Hz, 200 to 230 V/60 Hz (*1)					
	Control power auxiliary input Number of phases, voltage, frequency	Single-phase 200 to 230 V, 50/60 Hz					
	Fan power auxiliary input Number of phases, voltage, frequency	-	Single-phase 200 to 220 V/50 Hz, 200 to 230 V/60 Hz (*1)				
	Permissible fluctuations	Voltage: -15 to +10%, frequency: +5 to -5%, voltage interphase unbalance ratio: within 2% (*3)					
	Required power supply capacity [kVA] (*6)	38	47	57	70	93	111
Carrier frequency [kHz]		7.5 to 15 (*4)				5 to 10 (*5)	
Approximate weight [kg]		24	29	39	39	55	95
Protective construction		IP00 open type					

(Note 1) The specifications are as shown above for function code F03 = 0 (MD (CT)).

(*1) Customer orders for 220 to 230 V/50 Hz models are accepted.

(*2) When the power supply voltage is 200 V, the output voltage is approximately 320 VDC, 343 VDC when 220 V, and 355 VDC when 230 V.

(*3) Interphase unbalance ratio (%) $= \frac{\text{Max. voltage [V] - Min. voltage [V]}}{\text{Three-phase average voltage}} \times 67$

(*4) When equipped with OPC-RHCE-TBSI-2, the carrier frequency with no transformer automatically becomes 7.5 kHz.

(*5) When equipped with OPC-RHCE-TBSI-2, the carrier frequency with no transformer automatically becomes 5 kHz.

(*6) Be sure to connect to a power supply with the above required power supply capacity or higher.
(If the power supply capacity is insufficient, the converter or inverter may suffer damage due to waveform distortion at the power supply side.)
If a power supply boosted with a low-capacity transformer is used for the main circuit power supply, etc. for performing a control panel sequence check in particular, there is a possibility that problems may occur. In cases such as this, open the converter “RUN-CM”, and perform a sequence check of other parts without running the converter.

Three-phase 400 V input series (unit type)

Item		Specification														
Type: RHC□-4EJ		45	55	75	90	110	132	160	200	220	280	315	355	400	500	630
Applicable inverter capacity [kW]		45	55	75	90	110	132	160	200	220	280	315	355	400	500	630
Output	Continuous capacity [kVA]	53	65	88	103	126	150	182	227	247	314	353	400	448	560	705
	Overload rating	Continuous rating of 150%-1 min														
	Voltage	640 to 710 VDC (varies based on input voltage) (*2)														
Input power supply	Main power supply Number of phases, voltage, frequency	Three-phase three-wire system, 380 to 440 V/50 Hz, 380 to 460 V/60 Hz (*1)														
	Control power auxiliary input Number of phases, voltage, frequency	Single-phase 380 to 480 V, 50/60 Hz														
	Fan power auxiliary input Number of phases, voltage, frequency	-		Single-phase 380 to 440 V/50 Hz, 380 to 480 V/60 Hz												
	Permissible fluctuations	Voltage: -15 to +10% (interphase unbalance ratio: within 2% (*3)), frequency: +5 to -5%														
	Required power supply capacity [kVA] (*7)	57	70	93	111	136	161	196	244	267	341	383	433	488	610	762
Carrier frequency [kHz]		7.5 to 15 (*4)		5 to 10 (*5)												3 to 6 (*6)
Approximate weight [kg]		30	32	38	58	60	85	87	116	119	215	215	290	290	485	485
Protective construction		IP00 open type														

(Note 1) The specifications are as shown above for function code F03 = 0 (MD (CT)).

(*1) The tap inside the converter must be switched when the power supply voltage is 380 to 398 V/50 Hz or 380 to 430 V/60 Hz.
The capacity must be reduced when the power supply voltage is less than 400 V.

(*2) When the power supply voltage is 400 V, the output voltage is approximately 640 VDC, 686 VDC when 440 V, and 710 VDC when 460 V.

(*3) Interphase unbalance ratio (%) $= \frac{\text{Max. voltage [V] - Min. voltage [V]}}{\text{Three-phase average voltage}} \times 67$

(*4) When equipped with OPC-RHCE-TBSI-4, the carrier frequency with no transformer automatically becomes 7.5 kHz.

(*5) When equipped with OPC-RHCE-TBSI-4, the carrier frequency with no transformer automatically becomes 5 kHz.

(*6) When equipped with OPC-RHCE-TBSI-4, the carrier frequency with no transformer automatically becomes 2.5 kHz.

(*7) Be sure to connect to a power supply with the above required power supply capacity or higher.
(If the power supply capacity is insufficient, the converter or inverter may suffer damage due to waveform distortion at the power supply side.)
If a power supply boosted with a low-capacity transformer is used for the main circuit power supply, etc. for performing a control panel sequence check in particular, there is a possibility that problems may occur. In cases such as this, open the converter “RUN-CM”, and perform a sequence check of other parts without running the converter.

LD (VT) specification (for low overload)

Three-phase 200 V input series (unit type)

Item		Specification					
Type: RHC□-2EJ		30	37	45	55	75	90
Applicable inverter capacity [kW]		37	45	55	75	90	110
Output	Continuous capacity [kW]	44	53	65	88	103	126
	Overload rating	Continuous rating of 120%-1 min					
	Voltage	320 to 355 VDC (varies based on input voltage) (*2)					
Input power supply	Main power supply Number of phases, voltage, frequency	Three-phase three-wire system, 200 to 220 V/50 Hz, 200 to 230 V/60 Hz (*1)					
	Control power auxiliary input Number of phases, voltage, frequency	Single-phase 200 to 230 V, 50/60 Hz					
	Fan power auxiliary input Number of phases, voltage, frequency	-	Single-phase 200 to 220 V/50 Hz, 200 to 230 V/60 Hz (*1)				
	Permissible fluctuations	Voltage: -15 to +10%, frequency: +5 to -5%, voltage interphase unbalance ratio: within 2% (*3)					
	Required power supply capacity [kVA] (*4)	47	57	70	93	111	136
Carrier frequency [kHz]		7.5 to 10				5 to 6	
Approximate weight [kg]		24	29	39	39	55	95
Protective construction		IP00 open type					

(Note 1) The specifications are as shown above for function code F03 = 1 (LD (VT)).

(*1) Customer orders for 220 to 230 V/50 Hz models are accepted.

(*2) When the power supply voltage is 200 V, the output voltage is approximately 320 VDC, 343 VDC when 220 V, and 355 VDC when 230 V.

(*3) Interphase unbalance ratio (%) $= \frac{\text{Max. voltage [V] - Min. voltage [V]}}{\text{Three-phase average voltage}} \times 67$

(*4) Be sure to connect to a power supply with the above required power supply capacity or higher.
(If the power supply capacity is insufficient, the converter or inverter may suffer damage due to waveform distortion at the power supply side.)
If a power supply boosted with a low-capacity transformer is used for the main circuit power supply, etc. for performing a control panel sequence check in particular, there is a possibility that problems may occur. In cases such as this, open the converter “RUN-CM”, and perform a sequence check of other parts without running the converter.

Three-phase 400 V input series (unit type)

Item		Specification												
Type: RHC□-4EJ		45	55	75	90	110	132	160	200	220	280	315	355	400
Applicable inverter capacity [kW]		55	75	90	110	132	160	200	220	280	315	355	400	500
Output	Continuous capacity [kVA]	65	88	103	126	150	182	227	247	314	353	400	448	560
	Overload rating	Continuous rating of 120 %-1 min												
	Voltage	640 to 710 VDC (varies based on input voltage) (*2)												
Input power supply	Main power supply Number of phases, voltage, frequency	Three-phase three-wire system, 380 to 440 V/50 Hz, 380 to 460 V/60 Hz (*1)												
	Control power auxiliary input Number of phases, voltage, frequency	Single-phase 380 to 480 V, 50/60 Hz												
	Fan power auxiliary input Number of phases, voltage, frequency	-		Single-phase 380 to 440 V/50 Hz, 380 to 480 V/60 Hz										
	Permissible fluctuations	Voltage: +10 to -15% (interphase unbalance ratio: within 2% (*3)), frequency: +5 to -5%												
	Required power supply capacity [kVA] (*4)	70	93	111	136	161	196	244	267	341	383	433	488	610
Carrier frequency [kHz]		7.5 to 10		5 to 6										
Approximate weight [kg]		30	32	38	58	60	85	87	116	119	215	215	290	290
Protective construction		IP00 open type												

(Note 1) The specifications are as shown above for function code F03 = 1 (LD (VT) specification).

(*1) The tap inside the converter must be switched when the power supply voltage is 380 to 398 V/50 Hz or 380 to 430 V/60 Hz.
The capacity must be reduced when the power supply voltage is less than 400 V.

(*2) When the power supply voltage is 400 V, the output voltage is approximately 640 VDC, 686 VDC when 440 V, and 710 VDC when 460 V.

(*3) Interphase unbalance ratio (%) $= \frac{\text{Max. voltage [V] - Min. voltage [V]}}{\text{Three-phase average voltage}} \times 67$

(*4) Be sure to connect to a power supply with the above required power supply capacity or higher.
(If the power supply capacity is insufficient, the converter or inverter may suffer damage due to waveform distortion at the power supply side.)
If a power supply boosted with a low-capacity transformer is used for the main circuit power supply, etc. for performing a control panel sequence check in particular, there is a possibility that problems may occur. In cases such as this, open the converter “RUN-CM”, and perform a sequence check of other parts without running the converter.

[2] Common Specifications

Item			Specification Unit type
Control	Control method		AVR, and ACR control
	Operation method		By turning the power ON following connection, rectification is performed, boosting operation is performed with a run command (short circuit across RUN-CM, or run command via communication), and the unit is ready for operation.
	Running status signal		Running, powering, regenerating, ready for operation, batch fault, etc.
	MD (CT)/LD (VT) switching		MD (CT): Overload rating of 150% for 1 min, LD (VT): overload rating of 120% for 1 min selection
	Carrier frequency		2.5 to 15 Hz (see individual specifications for details.)
	Input power factor		0.99 or higher (with 100% load, excl. when equipped with OPC-RHCE-TBSI-□) (*1)
	Input harmonic current		A conversion coefficient of Ki = 0 can be used in accordance with the harmonic suppression countermeasure guidelines issued by the Ministry of Economy, Trade and Industry.
	Restart after momentary power failure		When a momentary power failure occurs, the gate is shut off at the insufficient voltage level, and the converter resumes operation automatically following recovery.
	Power limiting control		Control is possible at the previously set limit value or less.
Display	Key-pad	Alarm display (protective functions)	AC fuse blown, AC overvoltage, AC undervoltage, AC overcurrent, AC input current error, input phase loss, synchronous power supply frequency error, DC fuse blown (*2), DC overvoltage, DC undervoltage, charging circuit error, fin overheating, external fault, converter overheating, overload, memory error, touch panel communication error, CPU error, network equipment error, operating procedure mistake, A/D converter error, optical network error, DC fan lock, hardware error, simulation failure
		Alarm history	The latest and older alarm codes (up to 10 times), and the latest and older alarm detailed information (up to 10 times) are saved and displayed, and the date and time at which alarms occurred are saved and displayed with the calendar/clock display function (accuracy: ±27 sec/month (Ta = 25 °C). Storage period: 5 years or longer (ambient temperature: 25 °C) * Battery: Built into models of all capacities as standard)
		Monitor	Displays input power, input RMS current value, input RMS voltage value, intermediate DC current, and power supply frequency (alarm code).
		Load factor	The load factor can be measured from the keypad.
		Display language	Function codes can be set and referenced in Japanese, English, Chinese, and Korean (4 languages).
	Loader (*3)	Historical trace	Sampling data stored in the converter is read and displayed in a graph. Sampling time: 62.5 us to 1 s
		Real-time trace	Data is read from the converter in real time and displayed in a graph. Sampling time: 1 ms to 1 s
		Traceback	Sampling data stored in the converter is read when an alarm occurs and displayed in a graph. Sampling time: 62.5 us to 1 s (However, for other than current, the traceback function can be used with sampling time of 400 us or longer.) Sampling data is retained in the memory using battery power. Retention time: 5 years or longer (ambient temperature: 25 °C)
		Operation monitor	I/O monitoring, system monitoring, and alarm history monitoring, etc. can be performed.
		Function code settings	The function code setting status can be checked. Function code settings can be edited, transferred, compared, and initialized.
	Charge lamp		Lights up while power is being supplied to the converter unit. Lights up when there is control power.

Item		Specification Unit type
Maintainability	Common	• Recording and display of control power cumulative capacitor life and cooling fan cumulative run time • Recording and display of converter run time • Recording and display of maximum input current value for past hour, maximum power, and maximum converter internal temperature
Communication	RS-485	Function codes can be set and referenced by connecting a computer or programmable controller by RS-485 communication.
	USB	This is a USB connector (miniB specification) for connecting to a computer. Function codes can be edited, transferred, and verified, and all converter states can be monitored using the converter support loader.

*1: When the power supply voltage is 420 V (210 V) or higher, and the operating load is 50% or higher, the power factor for the power supply drops to approx. 0.95 (only during regenerative operation).

*2: An AC fuse blown detection card option (OPC RHCE ACF) is necessary.

*3: The FRENIC-RHC Loader software can be downloaded from FeLibrary, Fuji Electric's dedicated material resource site.

11.7.3 Function Specifications

■ Terminal functions (unit type)

Classification	Terminal symbol	Terminal name	Specification
Main circuit	L1/R, L2/S, L3/T	Main power supply input	Connect to a three-phase power supply via a dedicated reactor.
	P(+), N(-)	Converter output	Connect to inverter power supply input terminals P(+) and N(-).
	E (G)	Grounding terminal	Grounding terminal for converter chassis (case)
	R0, T0	Control power auxiliary input	Connect to the control power supply backup terminal, same power supply system as the main circuit power supply.
	R1, T1	Fan power supply	This is the connection terminal for the fan power supply. Connected with R1-Ri and T1-Ti shorted when shipped. If using the fan power supply independently, consult your Fuji Electric representative.
Voltage detection	Ri, Si, Ti (unit type)	Synchronous power supply input for voltage detection	This is a detection terminal used for the control inside the converter, and is connected to the dedicated reactor and dedicated filter power supply side.
	R, T, R2, T2 *1 (when equipped with option card)	Input for control monitoring	This is a connection terminal for detecting blown AC fuses.
Input signal	RUN	Run command	Converter runs when ON across RUN and CM, and stops when OFF.
	RST	Alarm reset command	By eliminating the cause of the alarm when an alarm stoppage occurs, and turning ON between RST and CM, the protective function that was activated is canceled, and operation resumes.
	X1 to X3 (unit type)	Digital input	0: External alarm [THR], 1: Current limiting cancel [LMT_CCL], 2: 73 answerback [73ANS], 3: Current limiting switch [I-LIM], 4-13: Custom Di1-10 [C-DI1 to C-DI10], 14: Universal DI [U-DI], 15: AC fuse blown [ACF], 16: RHF overheating alarm [RHF-OH], 17: Parallel system cancel [MT-CCL] 18: Generator/commercial power supply switching [SW-GEN]
	CM	Digital input common	This is a common terminal for digital input signals.
	PLC	PLC signal power supply	Connect the power supply for PLC output signals. (Rated voltage: 24 V (22 to 27) DC)
Output signal	30A, 30B, 30C	Batch output alarm	A signal is output when the converter protective function activates and an alarm stoppage occurs. (Contact: 1C, when error occurs, across 30A-30C: ON) (Contact capacity: 250 VAC, 50 mA max.)
	Y1, Y2, Y3, Y11 to Y18	General-purpose transistor output	0: Running [RUN], 1: Ready for operation [RDY], 2: Power supply current limiting [IL], 3: Lifetime alarm [LIFE], 4: Cooling fin overheating warning [PRE-OH], 5: Overload warning [PRE-OL], 6: Power running [DRV], 7: Regenerating [REG], 8: Current limiting warning [CUR], 9: Restart after momentary power failure [U-RES], 10: Source frequency synchronization [SY-HZ], 11: Alarm information 1 [AL1], 12: Alarm information 2 [AL2], 13: Alarm information 4 [AL4], 14: DC fan lock [DCFL], 15-24: Custom Do1-10 [C-DO1 to C-DO10], 25: Universal DO [U-DO], 26: Light alarm [L-ALM], 27: Cooling fan running [FAN], 28: Parallel system communication established [MTS], 29: Parallel system cancel response [MEC-AB], 30: Parallel system master selection [MSS], 31: Parallel system local station fault [AL-SF], 32: Alarm output (for any alarm) [ALM], 33: Y-terminal test output ON [Y-ON], 34: Y-terminal test output OFF [Y-OFF]. 35: Clock battery life [BATT], 36: Retry function running [TRY] * 8 point DO extension function (Di function cannot be used) with OPC-VG1-DIO option
	CMY	General-purpose transistor output common	
	Y5A, Y5C	Relay output	
	A01, A04, A05	General-purpose analog output	0: Input power [PWR], 1: Input RMS current value [I-AC], 2: Input RMS voltage value [V-AC], 3: Intermediate DC voltage [V-DC], 4: Power supply frequency [FREQ], 5: +10 V test [P10], 6: -10 V test [N10], 12-18: Custom-AO1-7 [C-AO1 to C-AO7], 19: Universal AO [U-AO] * 2 point AO extension function (Ai function cannot be used) with OPC-VG1-AIO
	M	Analog output common	This is a common terminal for analog output signals.
	73A, 73C	Charging resistance ON relay output	This is the control output for the external charging resistance ON relay (73).

*1: To use the AC blown fuse detection function, the OPC-RHCE-ACF card for AC blown fuse detection is required. Refer to the RHC-E Unit Type Instruction Manual for details.

■ Communication specifications

Item			Specification
Communication specifications	General communication specifications		Operating information, running status, function code monitor function (polling), and RUN, RST, and X1 control (selecting) is possible. * Function code writing is not possible.
	【DX+】, 【DX-】	RS-485 (built in as standard)	Communication is possible with the PC or PLC (Fuji standard and RTU protocols are supported).
	T-Link (option)		T-Link communication with MICREX-F or an SX T-Link module is possible with the OPC-VG1-TL option.
	CC-Link (option)		Connection to CC-Link master devices is possible with the OPC-VG1-CCL option.
	SX bus (option)		MICREX-SX and SX bus connection is possible with the OPC-VG1-SX option.
	E-SX bus (option)		MICREX-SX and E-SX bus connection is possible with the OPC-VG1-ESX option.
	Optical communication (option)		Parallel multiplex system load sharing can be controlled with the OPC-RHCE-TBSI-□ option.

■ Function settings

Function code	Name
F00	Data protection
F01	High-frequency filter selection
F02	Restart mode after momentary power failure (Operation selection)
F03	Current rating switching
F04	LED monitor display selection
F05	LCD monitor display selection
F06	LCD monitor language selection
F07	LCD monitor contrast adjustment
F08	Carrier frequency
F09	Display coefficient for “Input watt-hour data”
E01	X1 function selection
E02 to 13	Y1, Y2, Y3, Y5, Y11 to 18 function selection
E14	I/O function normally open/closed
E15	RHC overload early warning level
E16	Cooling fan ON-OFF control
E17	Current limiting output (hysteresis width)
E18 to 20	A01, A04, A05 function selection
E21 to 23	A01, A04, A05 gain setting
E24 to 26	A01, A04, A05 bias setting
E27	A01 to 5 filter setting
E28, 29	X2 to X3 function selection
H01	Station address
H02	Operation selection when error occurs
H03	Time operating time
H04	Baud rate
H05	Data length selection
H06	Parity selection
H07	Stop bit selection
H08	Communication disconnection time
H09	Response interval time
H10	Protocol selection
H11	TL transmission format
H12	Paralleling system
H13	Number of paralleling system slave stations
H14	Alarm data deletion
H15, 16	Power supply current limiting (for driving 1/2)
H17, 18	Power supply current limiting (for braking 1/2)
H19, 20	Current limiting early warning (level/timer)
H21	Multiplex system station number setting
H22	Cooling fan ON-OFF control continuation timer
H23	Cumulative cooling fan run time default setting
H24 to 26	Clock time setting (set time: month/year, day/hour, minute/second)
H27	Clock time setting (clock time writing)
H28 to 33	Applicable light alarm definition 1 to 6
H34	Simulation failure
H35	Retry (count)
H36	Retry (waiting time)
H37	All save function
H38	Data initialization
H39, 40	For manufacturer: 1 to 2
H41	AVR-P (gain)
H42	AVR-I (integration constant)
H43	ACR-P (gain)

Function code	Name
H44	ACR-I (integration constant)
H45	ACR-ADJ (ACR adjustment)
o01 to 49	Bus setting parameter 0 to 48
U01	SX, E-SX bus communication format selection
U02	SX, E-SX bus station number monitor
U03	Protective function operation selection
U04	AVR control response
U05	DC voltage command value selection
U06 to 48	Reserved for particular manufacturers
U49	System voltage adjustment
U101 to 139	Reserved for particular manufacturers

■ Protective functions

Item	Display	Protection specification
AC blown fuse	ACF	This is activated when the external AC fuse blows due to shorting or damage to the internal circuit. If using this function, an option or AC fuse with microswitch is required.
AC overvoltage	AOU	This is activated if the AC power supply voltage exceeds the AC overvoltage detection level. AC overvoltage detection level (200V series: 276 Vrms, 400V series: 552 Vrms)
AC undervoltage	ALU	This is activated if the AC power supply voltage drops to the undervoltage detection level or below during operation. However, no alarm is output when "F02: Restart mode after momentary power failure (mode selection)" data is set to 1 (Operation). AC undervoltage detection level (200V series: 88 Vrms, 400V series: 176 Vrms)
AC overcurrent	AOC	This is activated if the AC current instantaneous value exceeds the overcurrent detection level such as when a power supply circuit short circuit or ground fault occurs.
AC input current error	ACE	This alarm is issued when the difference between the converter current command value and input AC current detection value exceeds the input current error detection level. However, no alarm is output when "F02: Restart mode after momentary power failure (mode selection)" data is set to 1 (Operation).
Input phase loss	LPU	This is activated when the power is turned ON, and if there is a phase interruption at the three-phase power supply connected to main circuit main power supply input terminals L1/R, L2/S, and L3/T, or if the three-phase power supply voltage is unbalanced, an alarm stop will occur at the converter. It is necessary to turn the power OFF and ON again to reset the alarm.
Synchronous power frequency error	FrE	This is activated when the power supply frequency detection value lies outside the 46 to 54 Hz or 56 to 64 Hz range (only when power ON), or a frequency of ±15% or more of the reference frequency (50/60 Hz) is detected (when run command input). However, no alarm is output when "F02: Restart mode after momentary power failure (mode selection)" data is set to 1 (Operation).
DC blown fuse	dCF	This is activated if the converter output is equipped with a DC fuse, and the DC fuse blows due to shorting or damage to the internal circuit. (200 V 75 kW or higher, 400 V 90 kW or higher)
DC overvoltage	dOU	This is activated at such times as when regenerative current from the inverter increases (regenerative energy exceeds braking capability), and the main circuit intermediate voltage exceeds the DC overvoltage detection level. DC overvoltage detection level (200V series: 405 VDC, 400V series: 820 VDC)
DC undervoltage	dLU	This is activated if the intermediate DC voltage drops to the insufficient voltage detection level or below due to such reasons as a drop in the power supply voltage during converter operation. However, no alarm is output when "F02: Restart mode after momentary power failure (mode selection)" data is set to 1 (Operation). DC undervoltage detection level (200V series: 186 VDC, 400V series: 371 VDC)
Charger circuit fault	PbF	This is activated if 73 answerback [73ANS] is selected with the X-terminal function selection. This is activated if there is no X-terminal input (electromagnetic contactor for bypassing charging circuit is closed) within 0.5 sec after the converter charging circuit control output [73A] signal is issued. To reset the alarm, change the X-terminal function selection, or turn the power OFF and back ON again.
Fin overheating	OH1	This is activated when the temperature around the cooling fins used to cool main circuit semiconductor devices rises due to such reasons as cooling fan stoppage.
External alarm	OH2	A converter alarm stoppage occurs when an external signal is input (THR).
Converter internal overheat	OH3	This is activated when the temperature around the control PCB rises due to reasons such as poor ventilation inside the converter.
Overload	OLU	This is activated if the AC power supply current exceeds the converter overload level for the anti-time limit characteristic. MD (CT): 150%/60 s, LD (VT): 120%/60 s
DC fan lock	dFA	This alarm is issued when the DC fan stops. (200 V 45 kW or higher, 400 V 75 kW or higher)
Memory error	Er1	This is activated if a memory error such as a data write error occurs.
Keypad communication error	Er2	This is activated if a keypad transfer error occurs. If this alarm is displayed on the touch panel, the converter unit does not output a batch alarm.
CPU error	Er3	This function is activated if a CPU error occurs.
Network equipment error	Er4	This is activated when a transmission error occurs due to noise, etc. while the converter is running with RS-485 communication, CC-Link, T-Link, SX-bus, or E-SX bus. It is activated by a PLC device error, communication line disconnection, or option alarm.
Operating procedure mistake	Er6	This is activated when multiple network options (T-Link, SX-bus, CC-Link) are installed.
A/D converter error	Er8	Operation stops when an error occurs in the A/D converter circuit.
Link communication error	Erb	This function is activated when a transmission error occurs during communication between RHC units using a high-speed serial communication terminal block (option).
Hardware error	ErH	Triggered when an error occurs at the LSI on the power supply PCB.
Simulation failure	Err	A simulated alarm state can be produced by keypad operation.

■ **Construction and environment**

Item		Construction, environment, standards
Construction specification	Construction	Type installed inside panel, external cooling type
	Protective construction	IP00
	Cooling system	Forced air cooling
	Mounting method	Vertical mounting
Environment	Usage location	The inverter must not be exposed to dust, direct sunlight, corrosive gases (Note 1), flammable gases, oil mist, vapor or water droplets. (Pollution degree 2 (IEC60664-1)) (Note 2) The atmosphere can contain a small amount of salt. (0.01 mg/cm^2 per year or less) There should be no condensation due to sudden temperature changes.
	Ambient temperature	-10 to 50 ºC
	Humidity	5 to 95% RH, there should no condensation
	Altitude	3000 m or less (However, output is reduced at 1001 to 3000 m)
	Vibration	Max. amplitude: 55 kW or lower (200V series) 75 kW or lower (400V series) 3mm less than 2 to 9 Hz 9.8m/s^2 less than 9 to 20 Hz 2m/s^2 less than 20 to 55 Hz 1m/s^2 less than 55 to 200 Hz 75 kW or higher (200V series) 90 kW or higher (400V series) 3mm less than 2 to 9 Hz 2m/s^2 less than 9 to 55 Hz 1m/s^2 less than 55 to 200 Hz
	Storage temperature	-25 to +70 ºC (during long-term storage: -10 to +30 ºC)
	Storage humidity	5 to 95% RH

(Note 1) Please contact Fuji Electric if sulfurized gas is produced in the location where the product is installed.

(Note 2) Do not install the inverter in an environment where it may be exposed to lint, cotton waste or moist dust or dirt which will clog the heat sink of the inverter. If the inverter is to be used in such an environment, install it in a cabinet to prevent lint, etc. getting in.

11.7.4 Device Configuration

■ Device configuration list

MD specification

Power supply voltage	Standard applicable motor [kW]	PWM converter type	Charging circuit contactor		Power supply contactor		Charging circuit box (*1, 2)						Boosting reactor		Filter resistor		Filter reactor		Filter capacitor		Filter circuit contactor	
									Charging resistor		AC fuse											
			(73)	Qty	(52)	Qty	(CU)	Qty	(R0)	Qty	(Fac)	Qty	(Lr)	Qty	(Rf)	Qty	(Lf)	Qty	(Cf)	Qty	(6F)	Qty
Three-phase 200 V	30	RHC30-2EJ	SC-N4	1	-	-	CU30-2C	1	(GRZG120 2 Ω)	(3)	(CR2L-200/UL) *4	(2)	LR2-37C	1	GRZG400 0.1 Ω	3	LFC2-37C	1	CF2-37C	1	-	-
	37	RHC37-2EJ	SC-N5	1			CU45-2C	1			(CR2L-260/UL) *4	(2)	LR2-55C	1			LFC2-55C	1	CF2-55C	1		
	45	RHC45-2EJ	SC-N7	1																		
	55	RHC55-2EJ	SC-N8	1			CU55-2C	1			(CR2L-400/UL) *4	(2)	LR2-75C	1			LFC2-75C	1	CF2-75C	1		
	75	RHC75-2EJ	SC-N11	1			CU75-2C	1														
	90	RHC90-2EJ					CU90-2C	1	(GRZG400 1 Ω)	(3)	(A50P600-4) *5	(2)	LR2-110C	1	GRZG400 0.12 Ω [2 in parallel]	6	LFC2-110C	1	CF2-110C	1		
Three-phase 400 V	45	RHC45-4EJ	SC-N3	1	-	-	CU45-4C	1	(80 W, 7.5 Ω) (HF5C5504)	(3)	(CR6L-150/UL) *4		LR4-55C	1	GRZG400 0.26 Ω	3	LFC4-55C	1	CF4-55C	1	-	-
	55	RHC55-4EJ	SC-N4	1			CU55-4C	1			(CR6L-200/UL) *4	(2)	LR4-75C	1	GRZG400 0.38 Ω	3	LFC4-75C	1	CF4-75C	1		
	75	RHC75-4EJ	SC-N5	1			CU75-4C	1														
	90	RHC90-4EJ	SC-N7	1			CU90-4C	1			(CR6L-300/UL) *4	(2)	LR4-110C	1	GRZG400 0.53 Ω [2 in parallel]	6	LFC4-110C	1	CF4-110C	1		
	110	RHC110-4EJ	SC-N8	1			CU110-4C	1	(GRZG120 2 Ω)	(3)												
	132	RHC132-4EJ					CU132-4C	1			(A50P400-4) *5	(2)	LR4-160C	1	RF4-160C	1	LFC4-160C	1	CF4-160C	1		
	160	RHC160-4EJ	SC-N11	1			CU160-4C	1			(A50P600-4) *5	(2)										
	200	RHC200-4EJ	SC-N12	1			CU200-4C	1	(GRZG400 1 Ω)	(3)			LR4-220C	1	RF4-220C	1	LFC4-220C	1	CF4-220C	1		
	220	RHC220-4EJ					CU220-4C	1			(A70QS800-4) *5	(2)										
	280	RHC280-4EJ	SC-N3	1	SC-N14	1	-	-	GRZG400 1 Ω [2 in parallel]	6	A70QS800-4 *5	2	LR4-280C	1	RF4-280C	1	LFC4-280C	1	CF4-280C	1	SC-N4	1
	315	RHC315-4EJ									A70P1600-4TA *5	2	LR4-315C	1	RF4-315C	1	LFC4-315C	1	CF4-315C	1		
	355	RHC355-4EJ											LR4-355C	1	RF4-355C	1	LFC4-355C	1	CF4-355C	1		
	400	RHC400-4EJ			SC-N16								LR4-400C	1	RF4-400C	1	LFC4-400C	1	CF4-400C	1		
	500	RHC500-4EJ			SC-N11	3							LR4-500C	1	RF4-500C	1	LFC4-500C	1	CF4-500C	1 (*3)		
	630	RHC630-4EJ			SC-N12	3					A70P2000-4 *5	2	LR4-630C	1	RF4-630C	1	LFC4-630C	1	CF4-630C	1 (*3)	SC-N7	1

(*1) There is a fuse (F) and charging resistor (R0) built into the charging circuit box.

(*2) Individual support will be required for charging circuit boxes with capacity of 280 kW or higher.
Please contact Fuji Electric.

(*3) CF4-500C to CF4-800C are comprised of two capacitors. For an order quantity of “1” for CF4-500C to CF4-800C, two capacitors will be shipped.

(*4) If a blown fuse is detected, install the OPC-RHCE-ACF card for AC blown fuse detection.
If not using a charging circuit box, a fuse with microswitch for blow fuse detection may be prepared.
In such a case, there is no need for the OPC-RHCE-ACF. Contact Fuji Electric separately for further information.

(*5) If a blown fuse is detected, install the OPC-RHCE-ACF card for AC blown fuse detection.

(*6) Refer to the PWM Converter Instruction Manual for details on MCCB/ELCB selection.

LD specification

Power supply voltage	Standard applicable motor [kW]	PWM converter Type	Charging circuit contactor		Power supply contactor		Charging circuit box (*1, 2)						Boosting reactor		Filter resistor		Filter reactor		Filter capacitor		Filter circuit contactor	
									Charging resistor		AC fuse											
			(73)	Qty	(52)	Qty	(CU)	Qty	(R0)	Qty	(Fac)	Qty	(Lr)	Qty	(Rf)	Qty	(Lf)	Qty	(Cf)	Qty	(6F)	Qty
Three-phase 200 V	37	RHC30-2EJ	SC-N5	1	-	-	CU30-2E	1	(GRZG120 2 Ω)	(3)	(CR2L-200/UL) *4	(2)	LR2-37C	1	GRZG400 0.12 Ω	3	LFC2-37C	1	CF2-37C	1	-	-
	45	RHC37-2EJ	SC-N7	1			CU45-2E	1			(CR2L-260/UL) *4	(2)	LR2-55C	1			LFC2-55C	1	CF2-55C	1		
	55	RHC45-2EJ	SC-N8	1																		
	75	RHC55-2EJ	SC-N11	1			CU55-2E	1			(CR2L-400/UL) *4	(2)	LR2-75C	1			LFC2-75C	1	CF2-75C	1		
	90	RHC75-2EJ					CU75-2E	1					LR2-110C	1	GRZG400 0.12 Ω [2 in parallel]	6	LFC2-110C	1	CF2-110C	1		
	110	RHC90-2EJ	SC-N12	1			CU90-2E	1	(GRZG400 1 Ω)	(3)	(A50P600-4) *5	(2)										
Three-phase 400 V	55	RHC45-4EJ	SC-N4	1	-	-	CU45-4C	1	(80 W, 7.5 Ω) (HF5C5504)	(3)	(CR6L-150/UL) *4	(2)	LR4-55C	1	GRZG400 0.26 Ω	3	LFC4-55C	1	CF4-55C	1	-	-
	75	RHC55-4EJ	SC-N5	1			CU55-4C	1			(CR6L-200/UL) *4	(2)	LR4-75C	1	GRZG400 0.38 Ω	3	LFC4-75C	1	CF4-75C	1		
	90	RHC75-4EJ	SC-N7	1			CU75-4C	1					LR4-110C	1	GRZG400 0.53 Ω [2 in parallel]	6	LFC4-110C	1	CF4-110C	1		
	110	RHC90-4EJ	SC-N8	1			CU90-4C	1			(CR6L-300/UL) *4	(2)										
	132	RHC110-4EJ					CU110-4C	1	(GRZG120 2 Ω)	(3)			LR4-160C	1	RF4-160C	1	LFC4-160C	1	CF4-160C	1		
	160	RHC132-4EJ	SC-N11	1			CU132-4C	1			(A50P400-4) *5	(2)										
	200	RHC160-4EJ	SC-N12	1			CU160-4C	1			(A50P600-4) *5	(2)	LR4-220C	1	RF4-220C	1	LFC4-220C	1	CF4-220C	1		
	220	RHC200-4EJ					CU200-4C	1	(GRZG400 1 Ω)	(3)												
	280	RHC220-4EJ	SC-N14	1			CU220-4C	1			(A70QS800-4) *5	(2)	LR4-280C	1	RF4-280C	1	LFC4-280C	1	CF4-280C	1		
	315	RHC280-4EJ	SC-N3	1	SC-N14	1	-	-	GRZG400 1 Ω [2 in parallel]	6	A70QS800-4 *5	2	LR4-315C	1	RF4-315C	1	LFC4-315C	1	CF4-315C	1	SC-N4	1
	355	RHC315-4EJ									A70P1600-4TA *5	2	LR4-355C	1	RF4-355C	1	LFC4-355C	1	CF4-355C	1		
	400	RHC355-4EJ			SC-N16	1							LR4-400C	1	RF4-400C	1	LFC4-400C	1	CF4-400C	1		
	500	RHC400-4EJ			SC-N11	3							LR4-500C	1	RF4-500C	1	LFC4-500C	1	CF4-500C	1 (*3)		

(*1) There is a fuse (F) and charging resistor (R0) built into the charging circuit box.

(*2) Individual support will be required for charging circuit boxes with capacity of 280 kW or higher. Please contact Fuji Electric.

(*3) CF4-500C is comprised of two capacitors. For an order quantity of “1” for CF4-500C, two capacitors will be shipped.

(*4) If a blown fuse is detected, install the OPC-RHCE-ACF card for AC blown fuse detection.
If not using a charging circuit box, a fuse with microswitch for blow fuse detection may be prepared.
In such a case, there is no need for the OPC-RHCE-ACF. Contact Fuji Electric separately for further information.

(*5) If a blown fuse is detected, install the OPC-RHCE-ACF card for AC blown fuse detection.

(*6) Refer to the PWM Converter Instruction Manual for details on MCCB/ELCB selection.

■RHC30-2EJ to RHC90-2EJ MD and LD Specification
■RHC45-4EJ to RHC220-4EJ MD and LD Specification

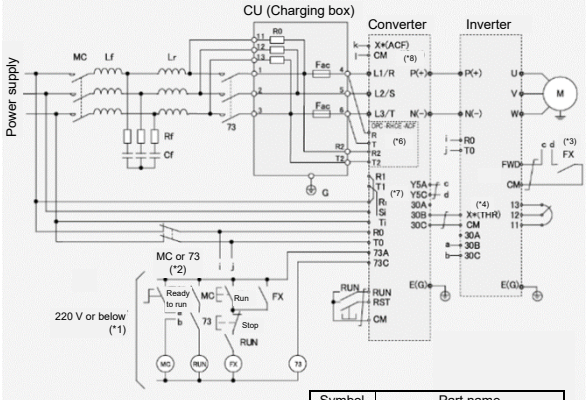

Symbol	Part name
Lr	Boosting reactor
Lf	Filtering reactor
Cf	Filtering capacitor
Rf	Filtering resistor
CU	Charging box
73	Magnetic contactor for charging circuit

(*1) If using a 400V series inverter for the main power supply, connect a step-down transformer to ensure that the sequence circuit voltage is 220 V or less.

(*2) Be sure to connect the PWM converter and inverter auxiliary power input terminals (R0, T0) to the main power via contact b of the charging circuit electromagnetic contactors (73 or MC). When using for a non-grounded power supply, it is necessary to add an insulated transformer.

(*3) Design the sequence so that the RUN signal is not input to the inverter until the PWM converter is ready.

(*4) Set any of the inverter unit X terminals for external alarm (THR).

(*5) Be sure to connect wires to the L1/R, L2/S, L3/T, Ri, Si, and Ti terminals to match the phase sequence.

(*6) If a blown fuse is detected, install the OPC-RHCE-ACF card for AC fuse blown detection, and connect as shown in the diagram.

(*7) With converters with R1 and T1 connectors, power is supplied to the AC fan with the R1 and T1 terminal, and Ri, Ti terminal internal connection, and therefore the wiring must not be disconnected.

(*8) If using a fuse with microswitch for detecting a blown fuse, set one of the PWM converter X terminals to AC fuse blown alarm (ACF), and connect all microswitches in series with the X terminal. Set contact b input with function code E14 for input with contact b.

■RHC280-4EJ to RHC630-4EJ MD Specification
■RHC280-4EJ to RHC400-4EJ LD Specification

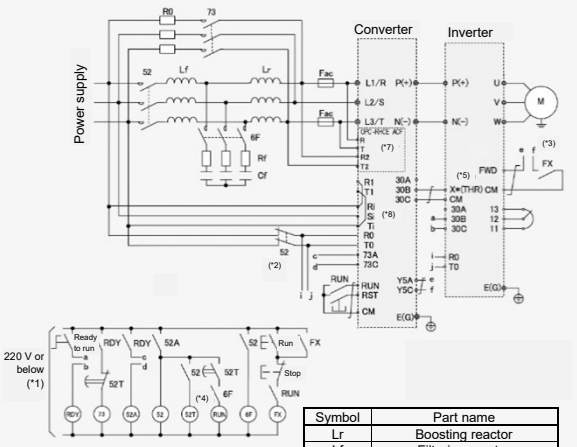

Symbol	Part name
Lr	Boosting reactor
Lf	Filtering reactor
Cf	Filtering capacitor
Rf	Filtering resistor
R0	Charging resistor
F	Fuse
73	Magnetic contactor for charging circuit
52	Magnetic contactor for power supply
6F	Magnetic contactor for filter circuit

(*1) Connect a step-down transformer to ensure that the sequence circuit voltage is 220 V or less.

(*2) Be sure to connect the PWM converter and inverter auxiliary power input terminals (R0, T0) to the main power via contact b of the power supply circuit magnetic contactor (52). When using for a non-grounded power supply, it is necessary to add an insulated transformer.

(*3) Design the sequence so that the RUN signal is not input to the inverter until the PWM converter is ready.

(*4) Set the 52T timer set time to 1 s.

(*5) Set any of the inverter unit X terminals for external alarm (THR).

(*6) Be sure to connect wires to the L1/R, L2/S, L3/T, Ri, Si, and Ti terminals to match the phase sequence.

(*7) If a blown fuse is detected, install the OPC-RHCE-ACF card for AC fuse blown detection, and connect as shown in the diagram.

(*8) With converters with R1 and T1 connectors, power is supplied to the AC fan with the R1 and T1 terminal, and Ri, Ti terminal internal connection, and therefore the wiring must not be disconnected.

11.7.5 External Dimensions

PWM converter unit

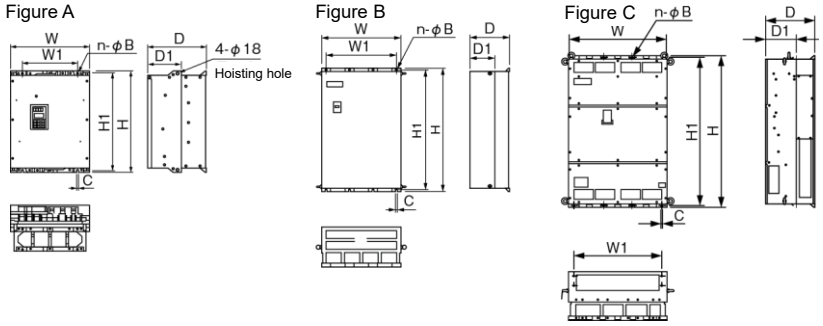

PWM converter type		Figure	Dimensions (mm)									Capacity	Approx. weight (kg)
			W	W1	H	H1	D	D1	n	B	C		
200V series	RHC30-2EJ	A	320	240	550	530	255	115	2	10	10	30	24
	RHC37-2EJ	A	355	275	615	595	270	115	2	10	10	37	29
	RHC45-2EJ	A	355	275	740	720	270	115	2	10	10	45	39
	RHC55-2EJ	A	355	275	740	720	270	115	2	10	10	55	39
	RHC75-2EJ	B	530	430	750	720	285	145	2	15	15	75	55
	RHC90-2EJ	B	680	580	880	850	360	180	3	10	10	90	95
400V series	RHC45-4EJ	A	355	275	615	595	270	115	2	10	10	45	30
	RHC55-4EJ	A	355	275	675	655	270	115	2	10	10	55	32
	RHC75-4EJ	A	355	275	740	720	270	115	2	10	10	75	38
	RHC90-4EJ	B	530	430	740	710	315	135	2	15	15	90	58
	RHC110-4EJ											110	60
	RHC132-4EJ	B	530	430	1000	970	360	180	2	15	15	132	85
	RHC160-4EJ											160	87
	RHC200-4EJ	B	680	580	1000	970	360	180	3	15	15	200	116
	RHC220-4EJ											220	119
	RHC280-4EJ	B	680	580	1400	1370	440	260	3	15	15	280	215
	RHC315-4EJ											315	
	RHC355-4EJ	B	880	780	1400	1370	440	260	4	15	15	355	290
	RHC400-4EJ											400	
	RHC500-4EJ	C	1000	900	1550	1520	500	313.2	4	15	15	500	485
	RHC630-4EJ											630	

<Boosting reactor>

Figure A

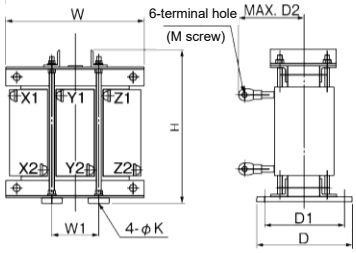

Figure B

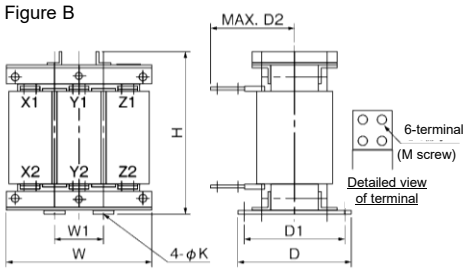

Boosting reactor type		Figure	Dimensions (mm)								Approx. weight (kg)
			W	W1	H	D	D1	D2	K	M	
200V series	LR2-37C	A	265	95	385	234	205	150	12	M10	48±2
	LR2-55C	A	285	95	420	250	215	160	12	M12	58
	LR2-75C	A	330	110	440	255	220	165	12	M12	70
	LR2-110C	A	345	115	500	280	245	185	12	M12	100
400V series	LR4-55C	A	270	95	370	244	215	145	12	M10	47±2
	LR4-75C	A	330	110	410	250	220	150	12	M10	61±2
	LR4-110C	A	330	115	455	275	245	170	12	M12	90±3
	LR4-160C	A	380	125	515	300	260	180	15	M12	121±4
	LR4-220C	A	450	150	580	330	290	220	15	M12	192±5
	LR4-280C	A	480	160	730	325	290	220	15	M16	220±5
	LR4-315C	A	480	160	745	335	300	225	15	M16	242±5
	LR4-355C	A	480	160	800	350	315	230	15	M16	282±5
	LR4-400C	A	480	160	825	375	330	260	19	M16	309±5
	LR4-500C	A	525	175	960	410	360	290	19	M16	420
	LR4-630C	B	600	200	640	440	390	285	19	4×M12	450

<Filter reactor>

Figure A

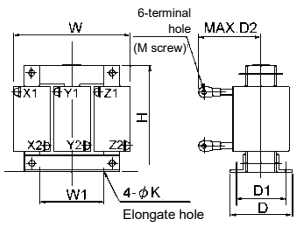

Figure B

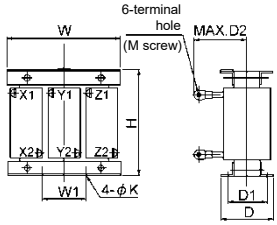

Figure C

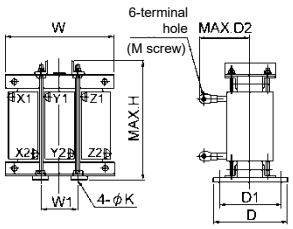

Figure D

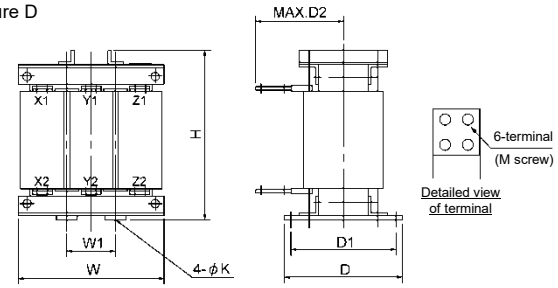

Filter reactor type		Figure	Dimensions (mm)								Approx. weight (kg)
			W	W1	H	D	D1	D2	K	M	
200V series	LFC2-37C	A	130*	60	115	101	85	115	6	M10	4.2±0.2
	LFC2-55C	A	175	60	145	110	90	140	6	M12	8.0
	LFC2-75C	A	195	80	200	120	100	150	7	M12	13
	LFC2-110C	B	255	85	230	118	95	165	7	M12	20
400V series	LFC4-55C	A	160*	60	130	108	90	115	6	M10	6.6±0.3
	LFC4-75C	A	180*	80	170	111	93	130	7	M10	11.5±0.6
	LFC4-110C	B	215	85	190	111	90	135	7	M12	14.7±0.7
	LFC4-160C	B	240*	85	205	126	110	140	7	M12	21.2±0.7
	LFC4-220C	C	275	100	315	208	180	165	10	M12	37±2
	LFC4-280C	C	275	110	325	223	195	195	12	M16	45±2
	LFC4-315C	C	290	105	350	223	195	200	12	M16	48±2
	LFC4-355C	C	290	105	350	228	200	205	12	M16	51±2
	LFC4-400C	C	330	115	400	230	200	185	12	M16	54±2
	LFC4-500C	C	345	115	480	240	205	240	12	M16	72
	LFC4-630C	D	435	145	550	295	255	200	15	4×M12	175

* Central values are indicated (These are not maximum values).

<Filter capacitor>

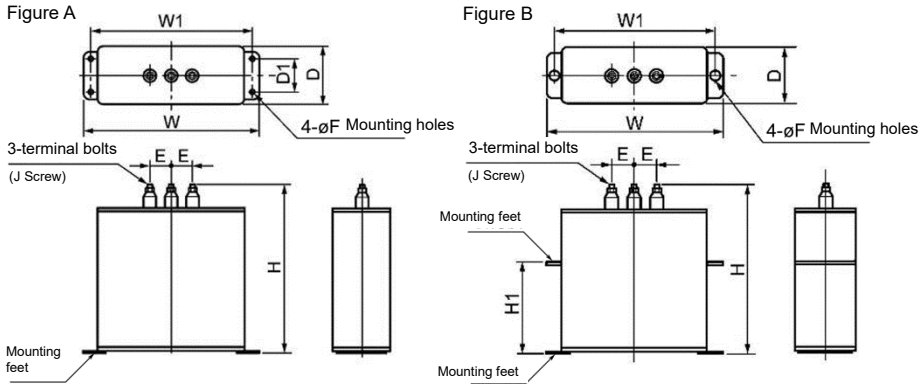

Filter capacitor type		Figure	Dimensions (mm)									Approx. weight (kg)
			W	W1	H	H1	D	D1	E	F	J	
200V series	CF2-37C	A	280	265	235	-	90	55	80	7	M5	7.0
	CF2-55C	A	280	265	340	-	90	55	80	7	M8	8.5
	CF2-75C	A	280	265	235	-	90	55	80	7	M6	7.0
	CF2-110C	A	280	265	340	-	90	55	80	7	M8	8.5
400V series	CF4-55C	A	205	190	245	-	70	40	30	7	M5	3.5
	CF4-75C	A	205	190	205	-	70	40	30	7	M5	2.9
	CF4-110C	A	205	190	245	-	70	40	30	7	M5	3.5
	CF4-160C	A	280	265	260	-	90	55	80	7	M6	6.0
	CF4-220C	B	435	400	310	125	100	-	80	15 x 20 elongated hole	M12	13.0
	CF4-280C	B	435	400	350	165	100	-	80	15 x 20 elongated hole	M12	15.0
	CF4-315C	B	435	400	460	275	100	-	80	15 x 20 elongated hole	M12	20.0
	CF4-355C	B	435	400	520	335	100	-	80	15 x 20 elongated hole	M12	23.0
	CF4-400C	B	435	400	610	425	100	-	80	15 x 20 elongated hole	M12	27.0
	CF4-500C	B	435	400	310	125	100	-	80	15 x 20 elongated hole	M12	13.0
	CF4-630C	B	435	400	460	275	100	-	80	15 x 20 elongated hole	M12	20.0

Note

- Mount vertically. Do not lower onto its side and mount.
- All mounting feet must be secured to the cabinet floor, etc. Figure A: 2 mounting feet locations, Figure B: 4 mounting feet locations

Failure to observe this could result in damage due to vibration or impact.

<Filter resistor>

Figure A

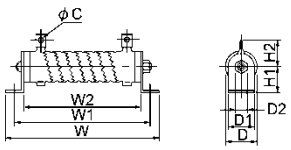

Figure B

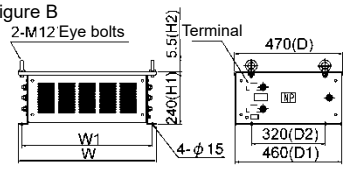

Figure C

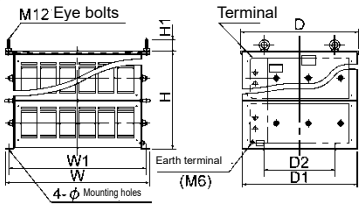

Filter resistor type		Figure	Dimensions (mm)									Approx. Weight (kg)
			W	W1	W2	H1	H2	D	D1	D2	C	
200 V series	GRZG400 0.1 Ω	A	411	385	330	40	46	47	40	9.5	8.2	0.85
	GRZG400 0.12 Ω	A	411	385	330	40	46	47	40	9.5	8.2	0.85
400 V series	GRZG400 0.38 Ω	A	411	385	330	40	46	47	40	9.5	8.2	0.85
	GRZG400 0.26 Ω	A	411	385	330	40	46	47	40	9.5	8.2	0.85
	GRZG400 0.53 Ω	A	411	385	330	40	46	47	40	9.5	8.2	0.85
	RF4-160C	B	400	370	-	240	55	470	460	320	-	22
	RF4-220C											25
	RF4-280C	C	655	625	-	240	55	470	460	320	-	31
	RF4-315C											35
	RF4-355C											36
	RF4-400C											38
	RF4-500C											41
	RF4-630C	C	655	625	-	440	55	530	520	320	-	70

<Charging box>

The charging box contains a combination of a charging resistor and a fuse, which is essential in the configuration of the RHC-E series of PWM converters. Using this charging box eases mounting and wiring jobs.

■ Capacity range

200V series: 30 to 90 kW (40 to 150 HP), 5 types

400V series: 45 to 220 kW (60 to 450 HP), 9 types, 14 types in total

As for 400V series with a capacity of 280 to 400 kW (500 to 800 HP), the charging resistor and the fuse are separately provided as before.

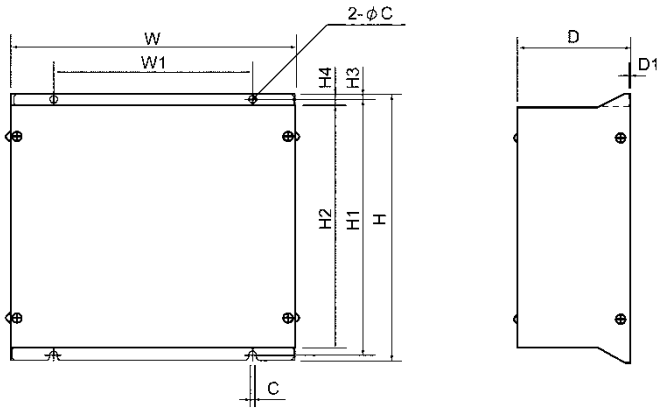

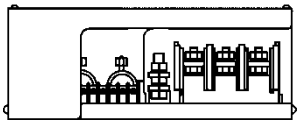

Fuse type		Dimensions (mm)										Mounting bolt	Approx. Weight (kg)
		W	W1	H	H1	H2	H3	4	D	D1	C		
200V series	CU30-2C	300	200	310	295	280	7.5	15	110	2.4	6	M5	7
	CU45-2C	330	230	310	295	280	7.5	15	130	2.4	6	M5	8
	CU55-2C												
	CU75-2C	430	330	560	536	510	12	25	150	3.2	10	M8	17
	CU90-2C												20
400V series	CU45-4C	300	200	310	295	280	7.5	15	110	2.4	6	M5	7
	CU55-4C												
	CU75-4C	330	230	310	295	280	7.5	15	130	2.4	6	M5	8
	CU90-4C												
	CU110-4C												
	CU132-4C	430	330	560	536	510	12	25	150	3.2	10	M8	18
	CU160-4C												
	CU200-4C												20
	CU220-4C												

<Charging resistors>

Figure A

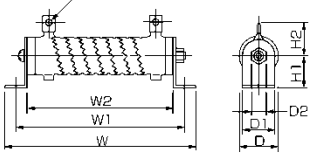

Figure B

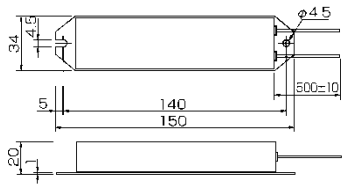

Charging resistor type	Figure	Dimensions (mm)									Approx. Weight (kg)
		W	W1	W2	H1	H2	D	D1	D2	C	
GRZG120 2 Ω	A	217	198	165	22	32	33	22	6	5.5	0.25
GRZG400 1 Ω	A	411	385	330	40	39	47	40	9.5	5.5	0.85
80 W 7.5 Ω (HF5C5504)	B	-	-	-	-	-	-	-	-	-	0.19

<Fuses>

Figure A

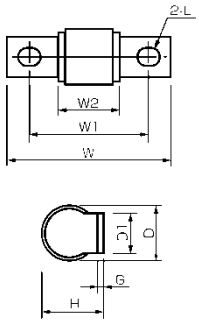

Figure B

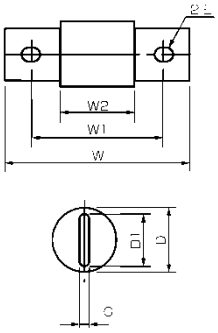

Figure C

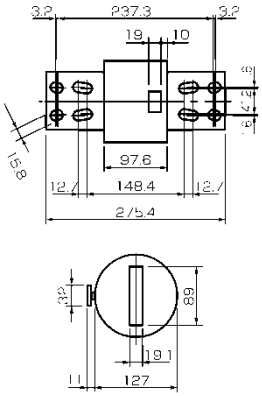

Side view of A70P1600-4TA

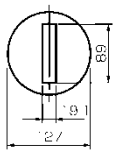

Side view of A70P2000-4

Fuse type		Figure	Dimensions (mm)								Approx. Weight (kg)
			W	W1	W2	H	D	D1	G	E	
200V series	CR2L-200/UL	A	85	60	30	33.5	30	25	3.2	11x13	0.13
	CR2L-260/UL										
	CR2L-400/UL	A	95	70	31	42	37	30	4	11x13	0.22
	A50P600-4	B	113.5	81.75	56.4	-	50.8	38.1	6.4	10.3x18.2	0.60
400V series	CR6L-150/UL	A	95	70	40	34	30	25	3.2	11x13	0.15
	CR6L-200/UL	A	107	82	43	42	37	30	4	11x13	0.25
	CR6L-300/UL										
	A50P400-4	B	110	78.6	53.1	-	38.1	25.4	6.4	10.3x18.4	0.30
	A50P600-4	B	113.5	81.75	56.4	-	50.8	38.1	6.4	10.3x18.2	0.60
	A70QS800-4	B	180.2	129.4	72.2	-	63.5	50.8	9.5	13.5x18.3	1.1
	A70P1600-4T	C	-	-	-	-	-	-	-	-	8.0
	A70P2000-4	C	-	-	-	-	-	-	-	-	8.0

■ Generated loss

In MD mode

Unit		Boosting reactor		Filter reactor		Filter resistor		
Type	Generated loss [W]	Type	Generated loss [W]	Type	Generated loss [W]	Type	Qty	Generated loss [W]
RHC30-2EJ	950	LR2-37C	330	LFC2-37C	32	GRZG400 0.1 Ω	3	107
RHC37-2EJ	1200							
RHC45-2EJ	1200	LR2-55C	450	LFC2-55C	43			240
RHC55-2EJ	1450							
RHC75-2EJ	1900	LR2-75C	520	LFC2-75C	74			137
RHC90-2EJ	2250	LR2-110C	720	LR2-110C	115	GRZG400 0.12 Ω (2 in parallel)	6	374
RHC45-4EJ	1250	LR4-55C	490	LFC4-55C	43	GRZG400 0.26 Ω	3	130
RHC55-4EJ	1550							
RHC75-4EJ	1800	LR4-75C	520	LFC4-75C	78	GRZG400 0.38 Ω	3	112
RHC90-4EJ	2200	LR4-110C	710	LFC4-110C	90	GRZG400 0.53 Ω (2 in parallel)	6	405
RHC110-4EJ	2550							
RHC132-4EJ	2800	LR4-160C	1000	LFC4-160C	160	RF4-160C	1	568
RHC160-4EJ	3350							
RHC200-4EJ	4100	LR4-220C	1240	LFC4-220C	200	RF4-220C	1	751
RHC220-4EJ	4600							
RHC280-4EJ	5700	LR4-280C	1430	LFC4-280C	220	RF4-280C	1	1027
RHC315-4EJ	6400	LR4-315C	1660	LFC4-315C	260	RF4-315C	1	1154
RHC355-4EJ	6950	LR4-355C	1910	LFC4-355C	300	RF4-355C	1	1286
RHC400-4EJ	7900	LR4-400C	2160	LFC4-400C	350	RF4-400C	1	1454
RHC500-4EJ	10400	LR4-500C	2470	LFC4-500C	450	RF4-500C	1	5463
RHC630-4EJ	10550	LR4-630C	2300	LFC4-630C	510	RF4-630C	1	4722

In LD mode

Unit		Boosting reactor		Filter reactor		Filter resistor		
Type	Generated loss [W]	Type	Generated loss [W]	Type	Generated loss [W]	Type	Qty	Generated loss [W]
RHC30-2EJ	1150	LR2-37C	330	LFC2-37C	32	GRZG400 0.1 Ω	3	107
RHC37-2EJ	1400	LR2-55C	450	LFC2-55C	43			240
RHC45-2EJ	1400							
RHC55-2EJ	1800	LR2-75C	520	LFC2-75C	74			137
RHC75-2EJ	2050	LR2-110C	720	LFC2-110C	115	GRZG400 0.12 Ω (2 in parallel)	6	374
RHC90-2EJ	2400							
RHC45-4EJ	1250	LR4-55C	490	LFC4-55C	43	GRZG400 0.26 Ω	3	130
RHC55-4EJ	1700	LR4-75C	520	LFC4-75C	78	GRZG400 0.38 Ω	3	112
RHC75-4EJ	1800	LR4-110C	710	LFC4-110C	90	GRZG400 0.53 Ω (2 in parallel)	6	405
RHC90-4EJ	2050							
RHC110-4EJ	2450	LR4-160C	1000	LFC4-160C	160	RF4-160C	1	568
RHC132-4EJ	2750							
RHC160-4EJ	3500	LR4-220C	1240	LFC4-220C	200	RF4-220C	1	751
RHC200-4EJ	3700							
RHC220-4EJ	4850	LR4-280C	1430	LFC4-280C	220	RF4-280C	1	1027
RHC280-4EJ	5700	LR4-315C	1660	LFC4-315C	260	RF4-315C	1	1154
RHC315-4EJ	6550	LR4-355C	1910	LFC4-355C	300	RF4-355C	1	1286
RHC355-4EJ	7150	LR4-400C	2160	LFC4-400C	350	RF4-400C	1	1454
RHC400-4EJ	8100	LR4-500C	2470	LFC4-500C	450	RF4-500C	1	1821

Note: Generated losses listed in the above tables are approximate values that are calculated according to the following conditions:

- The power supply is 200 V or 400 V 50 Hz with 0% interphase voltage unbalance ratio.
- The capacity of the power supply used is the larger of either 500 kVA or 10 times the rated capacity of the inverter.
- The motor is a 4-pole standard model at full load (100%).

11.8 Compact Power Regeneration PWM Converter

This is a more compact, lightweight product than the RHC series in section 11.9, and similarly, to convert power supply side current to a sine wave with PWM control in order to significantly reduce harmonic current, conversion factor Ki in the "Guideline for Suppressing Harmonics by Customers Receiving High Voltage or Special High Voltage" issued by the Agency for Natural Resources and Energy in the Ministry of Economy, Trade and Industry can be handled as "0" (in other words, zero harmonics are produced.)

11.8.1 Specifications

[1] Standard specification

■ 200V series

Item		Specifications					
Type: RHC□C-2EJ		5.5	7.5	11	15	18.5	22
Applicable inverter capacity [kW]		5.5	7.5	11	15	18.5	22
Output	Continuous capacity [kW]	6.5	8.8	13	18	22	26
	Overload rating	150% of regenerative rated capacity for 1 min					
	DC voltage	320 to 355 VDC Varies based on power supply voltage.					
	Rated DC current (DC) [A]	21	28	41	55	68	81
Carrier frequency		10 kHz					
Input	Phase, voltage and frequency	Three-phase 200 to 240 VAC, 50/60 Hz					
	Permissible fluctuations	Voltage: +10 to -15% (Phase-to-phase imbalance ratio: within 2%) Frequency: +5 to -5%					
	Rated power supply side current (AC) [A]	20	27	40	55	67	80
	Power factor	0.99 or higher (based on 100% load) *1					
Weight [kg] [lbs]		3.5	3.5	4.6	4.6	8.9	8.9

■ 400V series

Item		Specifications										
Type: RHC□C-4EJ		5.5	7.5	11	15	18.5	22	30	37	45	55	75
Applicable inverter capacity [kW]		5.5	7.5	11	15	18.5	22	30	37	45	55	75
Output	Continuous capacity [kW]	6.5	8.8	13	18	22	26	36	44	53	65	88
	Overload rating	150% of regenerative rated capacity for 1 min										
	DC voltage	640 to 710 VDC Varies based on power supply voltage.										
	Rated DC current (DC) [A]	11	14	21	28	34	41	55	68	83	101	138
Carrier frequency		10 kHz										
Input	Phase, voltage and frequency	Three-phase 380 to 480 VAC, 50/60 Hz										
	Permissible fluctuation	Voltage: +10 to -15% (interphase unbalance ratio: 2% or less) Frequency: 5 to -5%										
	Rated power supply side current (AC) [A]	10	14	20	27	34	40	55	67	82	100	134
	Power factor	0.99 or higher (based on 100% load) *1										
Weight [kg] [lbs]		3.5	3.5	4.6	4.6	8.9	8.9	23.8	23.8	28.3	28.3	35.6

*1 When the power supply voltage is 210 V or 420 V or higher, and the operating load is 50% or higher, the power factor for the power supply drops to approximately 0.95 (only during regenerative operation).

[2] Common specifications

Item		Details
Control	Control method	AVR constant control with DC ACR minor
	Digital input	Run, stop commands, alarm reset command, digital inputs (X1, X2), power supply for PLC signal
	Digital output	Transistor output (Y1, Y2, Y3), relay output (Y5A/Y5C), and total alarm output (30A/30B/30C)
	Analog output	FM1, FM2
	Input harmonic current	A conversion coefficient of ki = 0 can be used in accordance with the harmonic suppression countermeasure guidelines issued by the Ministry of Economy, Trade and Industry.
Protection		AC overcurrent, AC/DC low voltage, AC/DC overvoltage, input phase loss, synchronous power supply frequency errors, cooling fin overheating, external alarms, internal overheating, overloads, memory errors, keypad communication errors, CPU errors, network equipment errors, charging circuit errors, AC blown fuses, AC input current errors, DC fan locks
Environmental specifications	Ambient temperature	-10 to 50 °C
	Relative humidity	5 to 95% (there should be no condensation)
	Altitude	1,000 m or lower
	Atmospheric pressure	86 to 106 kPa
	Vibration	3 mm (max. amplitude), less than 2 to 9 Hz 9.8 m/s^2, less than 9 to 20 Hz 2 m/s^2, less than 20 to 55 Hz 1 m/s^2, less than 55 to 200 Hz
Peripheral equipment		Boosting reactors, filter reactors, filter capacitors, filter resistors, magnetic contactors, AC fuses, charging resistors

[3] Terminal functions

Terminal			Specifications
Type	Symbol	Function	
Main circuit	R, S, T	Main power supply input	Connect to a three-phase power supply via a dedicated reactor.
	P, N	Converter output	Connect to inverter power supply input terminals P and N.
	R0, T0	Control power auxiliary input	These are backup terminals for the control power. (30 kW or higher)
	G	Grounding terminal	This is a terminal for grounding.
	Ri, Si, Ti	Synchronous power supply input for voltage detection	This is a voltage detection terminal used for control inside the converter, and is connected to the dedicated filter power supply side.
	73A, C	Charging circuit control output	This is the control output for the external charging circuit. Contact capacity: 250 VAC, 5 A
Control input terminals	RUN	RUN / STOP commands	Runs when ON across RUN and CM, and stops when OFF.
	RST	Alarm reset command	By eliminating the cause of the alarm when an alarm stoppage occurs, and turning ON between RST and CM, the protective function that was activated is canceled, and operation resumes.
	X1, X2	Digital input (SINK / SOURCE)	Signals selected from the following functions can be input. 0: External alarm [THR], 1: Current limiting cancel [LMT-CCL], 2: 73 answerback [73ANS], 3: Current limiting switch [I-LIM], 14: Universal DI [U-DI], 15: AC fuse blown [ACF]
	PLC	PLC signal power supply	Connects the power supply for PLC output signals. The terminal can also be used as the power supply for loads connected to transistor outputs. Rated voltage: +24 V (22 to 27 VDC), max. output current: 100 mA
	CM	Digital input common	This is a common terminal for digital input signals.
Control output signals	30 A	Total alarm output (non-voltage contact signal (1C) output)	A signal is output when the protective function activates and an alarm stoppage occurs. Contact capacity: 250 VAC, 0.3 A, cosφ = 0.3
	30B		
	30C		
	Y1, Y2, Y3	Transistor output	Signals selected from the following functions can be output. 0: Running [RUN], 1: Ready for operation [RDY], 2: Power supply current limiting [IL], 3: Lifetime early warning [LIFE], 4: Cooling fin overheating early warning [PRE-OH], 5: Overload early warning [PRE-OL], 6: Power running [DRV], 7: Regenerating [REG], 8: Current limiting warning [CUR], 9: Restart after momentary power failure [U-RES], 10: Source frequency synchronization [SY-HZ], 11: Alarm information [AL1], 12: Alarm information [AL2], 13: Alarm information [AL4], 14: DC fan lock [DCFL], 25: Universal DO [U-DO], 27: Cooling fan running [FAN], 32: Alarm output (for any alarm) [ALM], 33: Y-terminal test output ON [Y-ON], 34: Y-terminal test output OFF [Y-OFF]
	CMY	Transistor output common	This is a common terminal for transistor output signals.
	Y5A	Relay output	Signals can be selected in the same way as terminals Y1 to Y3. Contact capacity: 250 VAC, 0.3 A, cosφ = 0.3
	Y5C		
	FM1, FM2	Analog output	The following monitor signals are output by selecting from analog DC voltage 0 to 10 V, DC current 4 to 20 mA, or in pulse 25 to 32000 p/s. (FM2 can output DC voltage only). 0: Power supply side power [PWR] 200%/+10 V, 1: Power supply side current RMS value [I-AC] 200%/+10 V, 2: Power supply side voltage RMS [V-AC] 250 (500) V/10 V, 3: Intermediate DC voltage [V-DC] 500 (1000) V/10 V, 4: Power supply frequency [FREQ] 100 Hz/10 V, 5: +10 V output test [P10]
	M	Analog output common	This is a common terminal for analog output signals.
Communication	RJ-45 connector	For keypad connection RJ-45 connector	This is used to connect the keypad. The keypad power is supplied from the converter via an extension cable for remote operation.
		RS-485 communication port	This is used to connect a computer or programmable controller, etc. by RS-485 communication.

■ Protection and early warning functions

Alarm name	Display	Operation details
AC overcurrent	AOC	This function is activated if the AC current instantaneous value exceeds the overcurrent detection level such as when a power supply circuit short circuit or ground fault occurs.
AC undervoltage	ALU	This function is activated if the AC power supply voltage drops to the undervoltage detection level or below during converter operation. However, no alarm is output when "F02: Restart mode after momentary power failure (mode selection)" data is set to 1 (Operation).
AC overvoltage	AOU	This function is activated if the AC power supply voltage exceeds the AC overvoltage detection level.
DC overvoltage	dOU	This function is activated at such times as when regenerative current from the inverter increases (regenerative energy exceeds braking capability), and the main circuit intermediate voltage exceeds the DC overvoltage detection level.
DC undervoltage	dLU	This function is activated if the intermediate DC voltage drops to the insufficient voltage detection level or below due to such reasons as a drop in the power supply voltage during converter operation. However, no alarm is output when "F02: Restart mode after momentary power failure (mode selection)" data is set to 1 (Operation).
Input phase loss	LPU	This function is activated when the power is turned on, and if there is a phase interruption at the three-phase power supply connected to main circuit main power supply input terminals R, S, and T, or if the three-phase power supply voltage is unbalanced, an alarm stop will occur at the converter. It is necessary to turn the power OFF and ON again to reset the alarm.
Synchronous power supply frequency error	FrE	This function is activated when the power supply frequency detection value lies outside the range. However, no alarm is output when "F02: Restart mode after momentary power failure (mode selection)" data is set to 1 (Operation).
Cooling fin overheat	OH1	This function is activated when the temperature around the cooling fins used to cool main circuit semiconductor devices rises due to such reasons as cooling fan stoppage.
External alarm	OH2	A converter alarm stoppage occurs when an external signal is input (THR).
Converter internal overheat	OH3	This function is activated when the temperature around the PCBs rises due to reasons such as poor ventilation inside the converter.
Converter overload	OLU	This function is activated if the AC power supply current exceeds the converter overload level. Converter overload detection level (150%/60 s)
Memory error	Er1	This function is activated if a memory error such as a data write error occurs.
Keypad communication error	Er2	This function is activated if a keypad transfer error occurs.
CPU error	Er3	This function is activated if a CPU error occurs.
Network error	Er4	This alarm is triggered when a transmission abnormality such as noise occurs while the converter is running with RS-485 communication. It is most likely caused by a PLC device error or communication line disconnection.
Charger circuit fault	PbF	This function is activated only when "73 answerback [73ANS]" is selected using X1/X2 function selection. There is no X1/X2 input (that is, the electromagnetic contactor for bypassing the charging circuit is closed) within 0.5 sec after the converter charging circuit control output (73A) signal is issued. To reset the alarm, change the X1/X2 function selection, or turn the power OFF and back ON again.
AC blown fuse	ACF	The converter external AC fuse blows due to shorting or damage to the internal circuit.
AC input current error	ACE	This alarm is issued when the difference between the converter current command value and input AC current detection value exceeds the input current error detection level. However, no alarm is output when "F02: Restart mode after momentary power failure (mode selection)" data is set to 1 (Operation).
DC fan lock	dFA	This alarm is issued when the DC fan stops. (75 kW models only) However, no alarm is output when "H28: Light alarm target definition" data is set to 1 (disable).

11.8.2 Device Configuration

[1] Device configuration table

Voltage	Applicable motor [kW]	Type	Boosting reactor		Filter resistor		Filter reactor		Filter capacitor	
			(Lr)	Qty	(Rf)	Qty	(Lf)	Qty	(Cf)	Qty
200V series	5.5	RHC5.5C-2EJ	LR2C-7.5E	1	RF80-0.42OHM	3	LFC2C-7.5E	1	CF2C-7.5E	1
	7.5	RHC7.5C-2EJ								
	11	RHC11C-2EJ	LR2C-15E	1	RF150-0.2OHM	3	LFC2C-15E	1	CF2C-15E	1
	15	RHC15C-2EJ								
	18.5	RHC18.5C-2EJ	LR2C-22E	1	RF200-0.13OHM	3	LFC2C-22E	1	CF2C-22E	1
	22	RHC22C-2EJ								
400V series	5.5	RHC5.5C-4EJ	LR4C-7.5E	1	RF80-1.74OHM	3	LFC4C-7.5E	1	CF4C-7.5E	1
	7.5	RHC7.5C-4EJ								
	11	RHC11C-4EJ	LR4C-15E	1	RF150-0.79OHM	3	LFC4C-15E	1	CF4C-15E	1
	15	RHC15C-4EJ								
	18.5	RHC18.5C-4EJ	LR4C-22E	1	RF200-0.53OHM	3	LFC4C-22E	1	CF4C-22E	1
	22	RHC22C-4EJ								
	30	RHC30C-4EJ	LR4C-37E	1	RF400-0.38OHM	3	LFC4C-37E	1	CF4C-37E	1
	37	RHC37C-4EJ								
	45	RHC45C-4EJ	LR4C-55E	1	RF400-0.26OHM	3	LFC4C-55E	1	CF4C-55E	1
	55	RHC55C-4EJ								
	75	RHC75C-4EJ	LR4C-75E	1	RF400-0.38OHM	3	LFC4C-75E	1	CF4C-75E	1

Voltage	Applicable motor [kW]	Type	Charging circuit contactor		Charging circuit			
			(73)	Qty	Charging resistor (R0)	Qty	Fuse (F)	Qty
200V series	5.5	RHC5.5C-2EJ	SC-5-1	1	CR80-7.5OHM	3	CR2LS-50S/UL	2
	7.5	RHC7.5C-2EJ						
	11	RHC11C-2EJ	SC-N1	1			CR2LS-75S/UL	2
	15	RHC15C-2EJ	SC-N2	1			CR2LS-100S/UL	2
	18.5	RHC18.5C-2EJ	SC-N3	1	CR120-2OHM	3		
	22	RHC22C-2EJ					CR2L-150S/UL	2
400V series	5.5	RHC5.5C-4EJ	SC-05	1	CR60-30OHM	3	CR6L-30S/UL	2
	7.5	RHC7.5C-4EJ						
	11	RHC11C-4EJ	SC-4-0	1			CR6L-50S/UL	2
	15	RHC15C-4EJ	SC-5-1	1				
	18.5	RHC18.5C-4EJ	SC-N1	1	CR80-7.5OHM	3		
	22	RHC22C-4EJ					CR6L-75S/UL	2
	30	RHC30C-4EJ	SC-N2	1			CR6L-100S/UL	2
	37	RHC37C-4EJ	SC-N2S	1			CR6L-150S/UL	2
	45	RHC45C-4EJ	SC-N3	1				
	55	RHC55C-4EJ	SC-N4	1			CR6L-200S/UL	2
	75	RHC75C-4EJ	SC-N5	1				

Note 1) Filter resistors (Rf) and charging resistors (RO) come in sets of three.
When placing your order, three items will be shipped if "1" is specified for the quantity.

Note 2) Charging circuit contactors and fuses are products of Fuji Electric FA Components & Systems Co., Ltd.

[2] Basic connection diagrams

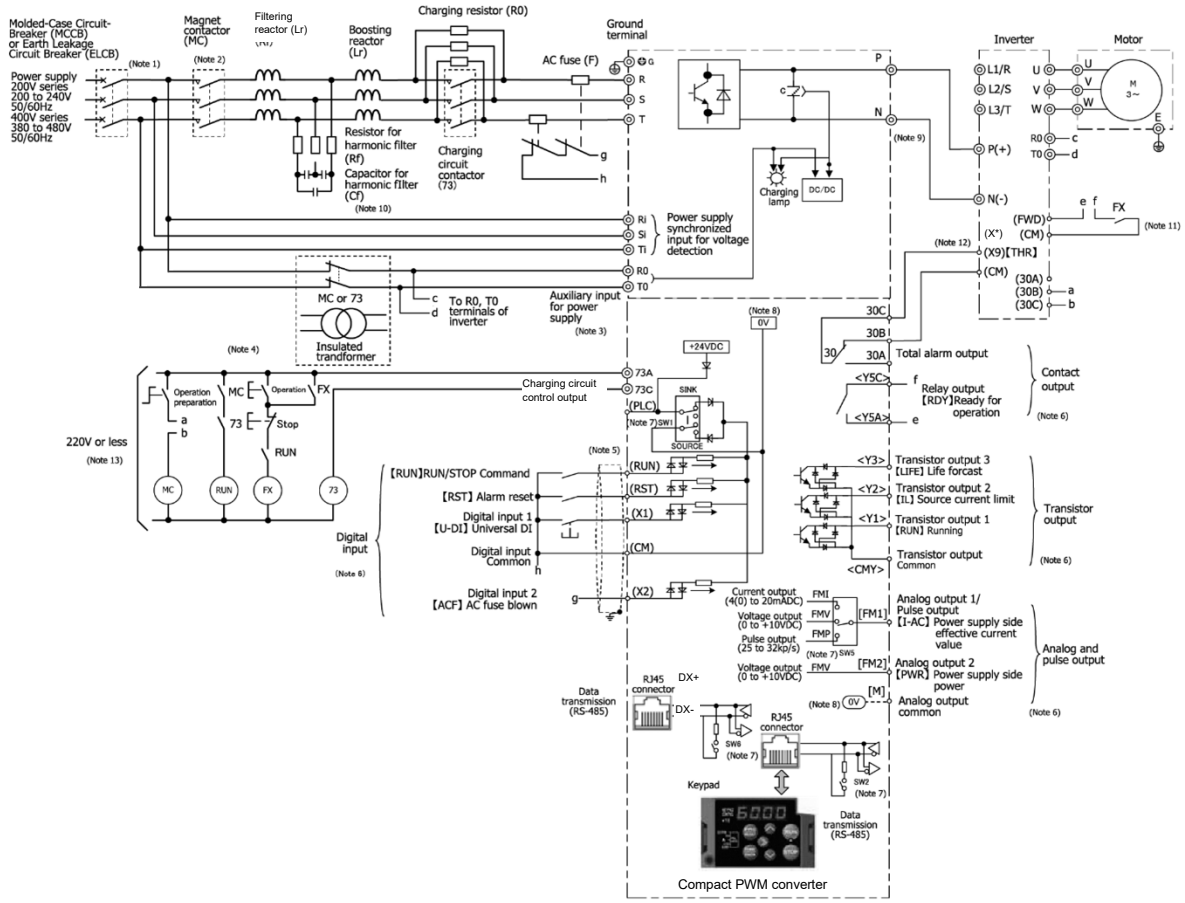

(Note 1) Install the recommended molded case circuit breaker (MCCB) or earth leakage circuit breaker (ELCB) (with overcurrent protection function) to protect wiring at the PWM converter input side (primary side). Do not use a circuit breaker that exceeds the recommended rated current.

(Note 2) An MC is used in addition to an MCCB or ELCB if isolating the PWM converter from the power supply, and therefore the recommended magnetic contactor (MC) should be installed if required. Please note that if installing a coil such as an MC or solenoid near the PWM converter or inverter, connect a surge absorber in parallel.

(Note 3) If wishing to retain the integrated alarm signal issued if the protective function is triggered even when the PWM converter main power supply is cut off, or to constantly display the keypad, connect these terminals to the power supply. The PWM converter can be run even without inputting the power supply to these terminals (30 kW or higher only).

(Note 4) Isolate the circuit using an insulated transformer, or magnetic contactor (MC) auxiliary contact (contact b). When using for a non-grounded power supply, it is necessary to add an insulated transformer.

(Note 5) Use twisted wire or shielded wire for control signal lines. Shielded wires are generally grounded, however, if subject to significant induction noise from outside, it may be possible to suppress the effect of the noise by connecting wires to [CM]. Isolate control signal lines from the main circuit wiring as best as possible, and do not run inside the same duct (a distance of 10 (cm) or greater is recommended.) If lines intersect, ensure that they do so almost perpendicularly to the main circuit wiring.

(Note 6) Each of the functions described for terminal [X1] to [X2] (digital input), terminals [Y1] to [Y3] (transistor output), and terminals [FM1] to [FM2] (monitor output) indicate the functions assigned by factory default.

(Note 7) These are the switches on control PCBs, and are used to set operation for each function.

(Note 8) 0V and (0V) are isolated and insulated.

(Note 9) Ensure that inverter and PWM converter DC bus line wiring (between terminals P and P(+), N and N(-)) is within 5 m.

(Note 10) Ensure that the wire length between the filter capacitor and power line is within 5 m.

(Note 11) Design the sequence so that the RUN signal is not input to the inverter until the PWM converter is ready.

(Note 11) Set any of the inverter unit X terminals for external alarm [THR].

(Note 13) If using a 400V series inverter for the main power supply, connect a step-down transformer to ensure that the sequence circuit voltage is 220 V or less.

11.8.3 External Dimensions

■ Figure A

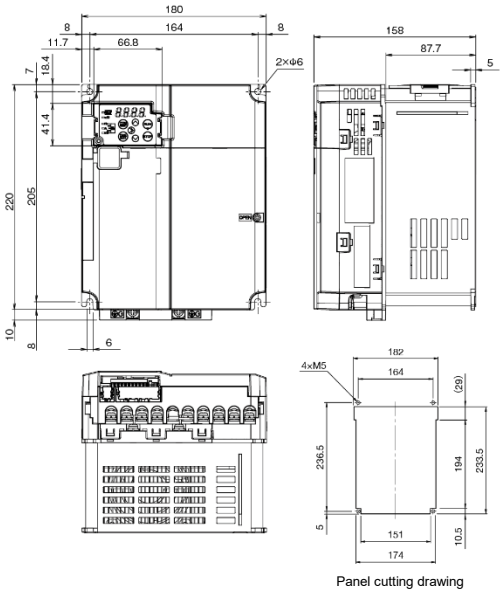

Panel cutting drawing

(Unit: mm)

Power supply voltage	Type
Three-phase 200 V	RHC5.5C-2EJ
	RHC7.5C-2EJ
Three-phase 400 V	RHC5.5C-4EJ
	RHC7.5C-4EJ

■ Figure B

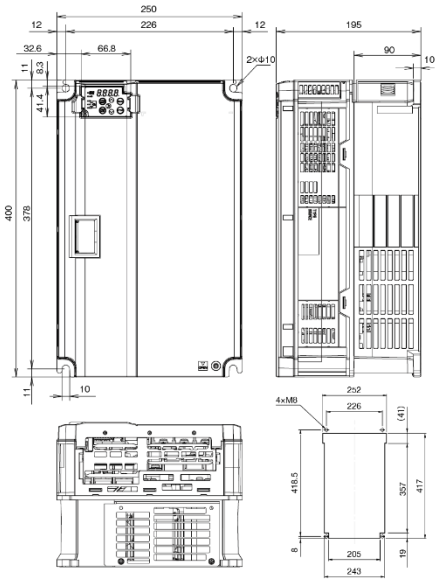

Panel cutting drawing

(Unit: mm)

Power supply voltage	Type
Three-phase 200 V	RHC18.5C-2EJ
	RHC22C-2EJ
Three-phase 400 V	RHC18.5C-4EJ
	RHC22C-4EJ

■ Figure C

(Unit: mm)

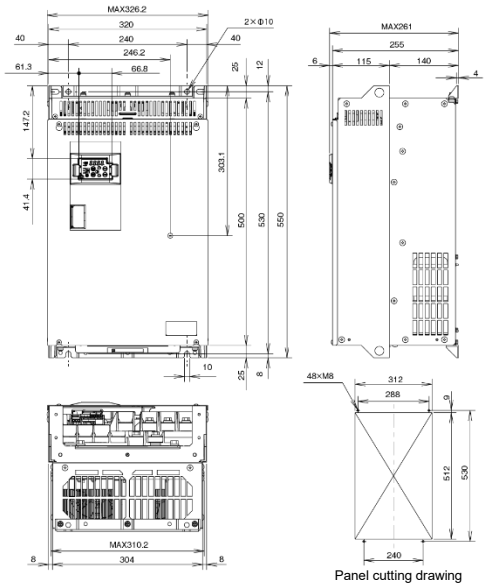

Panel cutting drawing

Power supply voltage	Type
Three-phase 400 V	RHC30C-4EJ
	RHC37C-4EJ

11.8.4 Peripheral Equipment

■ Boosting reactor

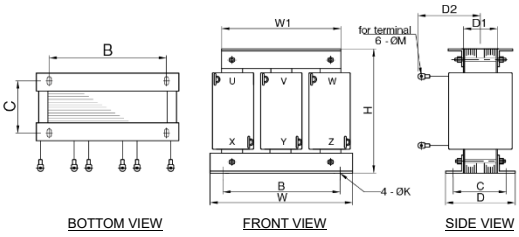

F1

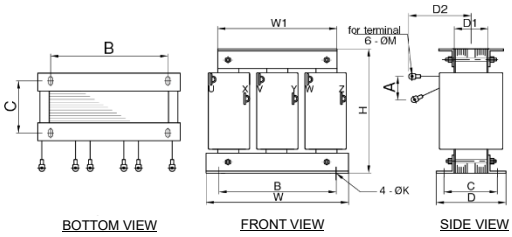

F2

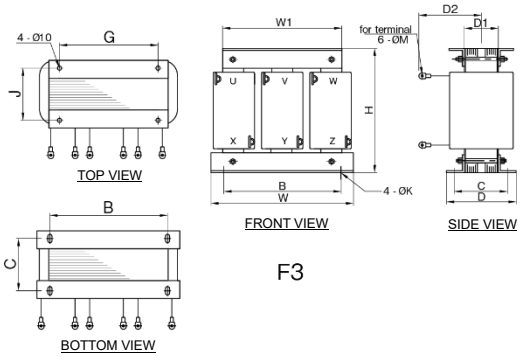

F3

Converter type	Boosting reactor type	Dimension (mm)											K	M	Figure	Approx. weight [kg]
		H (max.)	W (±1)	B (±1)	C (±5)	D (±5)	W1 (±1)	D1 (±5)	D2 (±5)	A (±5)	G	J				
RHC5.5C-2EJ	LR2C-7.5E	150	180	128	127	149	160	57	100	10	-	-	7 x 10	5	F2	11
RHC7.5C-2EJ																
RHC11C-2EJ	LR2C-15E	180	210	140	133	155	175	63	115	-	-	-	7 x 10	8	F1	16
RHC15C-2EJ																
RHC18.5C-2EJ	LR2C-22E	195	240	160	153	175	200	63	115	-	170	99	7 x 10	8	F3	21
RHC22C-2EJ																
RHC5.5C-4EJ	LR4C-7.5E	152	180	128	117	139	160	47	90	-	-	-	7 x 10	5	F1	10
RHC7.5C-4EJ																
RHC11C-4EJ	LR4C-15E	178	215	145	123	145	180	53	100	-	-	-	7 x 10	5	F1	14
RHC15C-4EJ																
RHC18.5C-4EJ	LR4C-22E	175	210	150	143	165	185	73	115	-	-	-	7 x 10	6	F1	19
RHC22C-4EJ																
RHC30C-4EJ	LR4C-37E	257	250	175	163	185	215	73	125	-	185	109	7 x 10	8	F3	35
RHC37C-4EJ																
RHC45C-4EJ	LR4C-55E	269	305	205	180	202	255	86	135	-	225	122	12x14	10	F3	50
RHC55C-4EJ																
RHC75C-4EJ	LR4C-75E	277	310	210	190	212	260	96	140	-	230	132	12x14	10	F3	58

■ **Filter resistor**

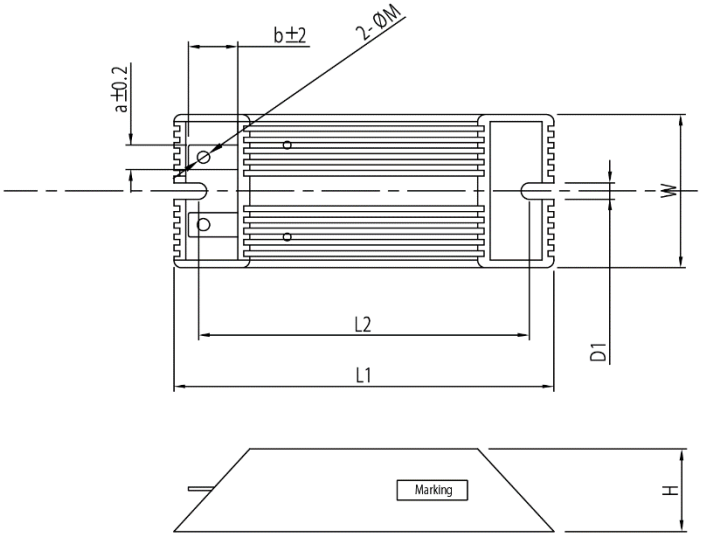

Converter type	Filter resistor Type	Dimension (mm)							M	Approx. weight [kg]
		L1 (±2)	L2 (±2)	W (±0.5)	H (±0.5)	D1 (±0.3)	a (±0.2)	b (±2)		
RHC5.5C-2EJ	RF80-0.42OHM	150	137	41	22	4.3	6.5	10	3.2	0.20
RHC7.5C-2EJ										
RHC11C-2EJ	RF150-0.2OHM	210	197	41	22	4.3	6.5	10	3.2	0.28
RHC15C-2EJ										
RHC18.5C-2EJ	RF200-0.13OHM	165	146	60	30	5.3	10	20.8	4.3	0.49
RHC22C-2EJ										
RHC5.5C-4EJ	RF80-1.74OHM	150	137	41	22	4.3	6.5	10	3.2	0.20
RHC7.5C-4EJ										
RHC11C-4EJ	RF150-0.79OHM	210	197	41	22	4.3	6.5	10	3.2	0.28
RHC15C-4EJ										
RHC18.5C-4EJ	RF200-0.53OHM	165	146	60	30	5.3	10	20.8	4.3	0.49
RHC22C-4EJ										
RHC30C-4EJ	RF400-0.38OHM	265	246	60	30	5.3	10	20.8	4.3	0.77
RHC37C-4EJ										
RHC45C-4EJ	RF400-0.26OHM	265	246	60	30	5.3	10	20.8	4.3	0.77
RHC55C-4EJ										
RHC75C-4EJ	RF400-0.38OHM	265	246	60	30	5.3	10	20.8	4.3	0.77

■ Filter reactor

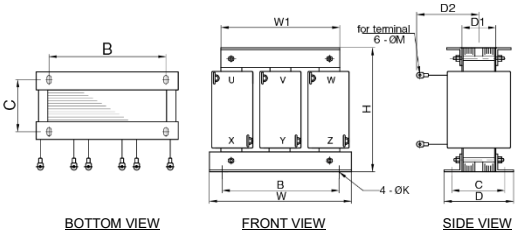

F1

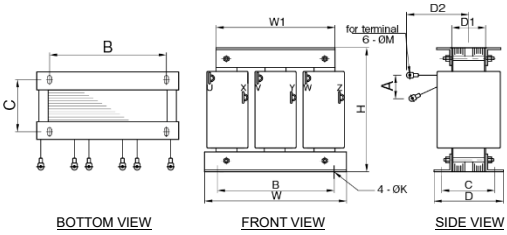

F2

Converter type	Filter Reactor type	Dimension (mm)									K	M	Figure	Approx. weight [kg]
		H (max.)	W (±1)	B (±1)	C (±5)	D (±5)	W1 (±1)	D1 (±5)	D2 (±5)	A (±5)				
RHC5.5C-2EJ	LFC2C-7.5E	105	155	91	95	117	114	25	80	40	7x10	5	F2	3
RHC7.5C-2EJ														
RHC11C-2EJ	LFC2C-15E	105	155	91	98	120	114	28	85	-	7x10	8	F1	4
RHC15C-2EJ														
RHC18.5C-2EJ	LFC2C-22E	105	155	91	102	124	114	32	95	-	7x10	8	F1	4
RHC22C-2EJ														
RHC5.5C-4EJ	LFC4C-7.5E	107	155	91	95	117	114	25	70	18	7X10	5	F2	3
RHC7.5C-4EJ														
RHC11C-4EJ	LFC4C-15E	107	155	91	100	122	114	30	85	-	7x10	5	F1	4
RHC15C-4EJ														
RHC18.5C-4EJ	LFC4C-22E	109	155	91	110	132	114	40	85	-	7x10	6	F1	4
RHC22C-4EJ														
RHC30C-4EJ	LFC4C-37E	123	155	104	107	129	130	37	90	-	7x10	8	F1	6
RHC37C-4EJ														
RHC45C-4EJ	LFC4C-55E	120	155	104	120	142	130	50	105	-	7x10	10	F1	7
RHC55C-4EJ														
RHC75C-4EJ	LFC4C-75E	154	180	128	127	149	160	57	115	-	7x10	10	F1	13

■ **Filter capacitor**

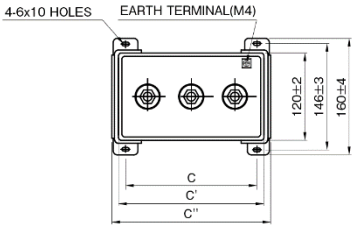

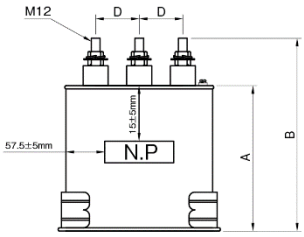

Converter type	Filter capacitor type	Dimension (mm)						Approx. weight [kg]
		A (±3)	B (±7)	C (±2)	C' (±3)	C" (±4)	D (±5)	
RHC5.5C-2EJ	CF2C-7.5E	120	176	170	200	210	60	4.3
RHC7.5C-2EJ								
RHC11C-2EJ	CF2C-15E	160	216	170	200	210	60	5.2
RHC15C-2EJ								
RHC18.5C-2EJ	CF2C-22E	170	226	170	200	210	60	5.4
RHC22C-2EJ								
RHC5.5C-4EJ	CF4C-7.5E	140	196	170	200	210	60	4.7
RHC7.5C-4EJ								
RHC11C-4EJ	CF4C-15E	160	216	170	200	210	60	5.2
RHC15C-4EJ								
RHC18.5C-4EJ	CF4C-22E	180	236	170	200	210	60	5.7
RHC22C-4EJ								
RHC30C-4EJ	CF4C-37E	180	236	170	200	210	60	5.7
RHC37C-4EJ								
RHC45C-4EJ	CF4C-55E	250	306	170	200	210	60	7.2
RHC55C-4EJ								
RHC75C-4EJ	CF4C-75E	180	236	170	200	210	60	5.7

■ **Charging resistor**

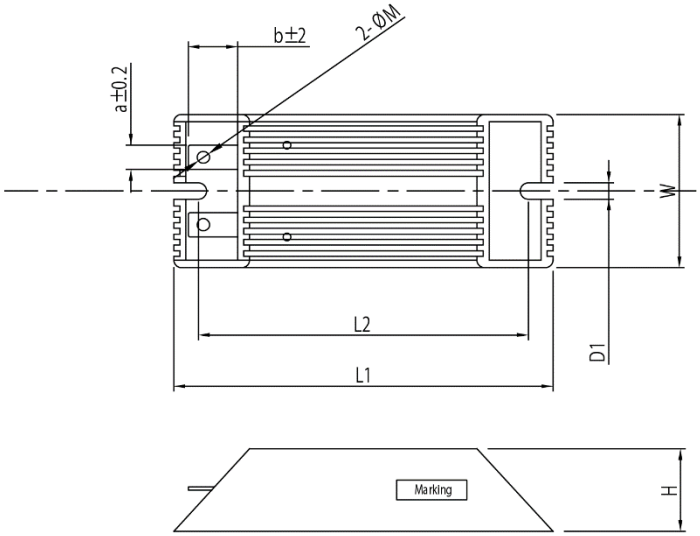

Converter type	Charging resistor type	Dimension (mm)							M	Approx. weight [kg]
		L1 (±2)	L2 (±2)	W (±0.5)	H (±0.5)	D1 (±0.3)	a (±0.2)	b (±2)		
RHC5.5C-2EJ	CR80-7.5OHM	150	137	41	22	4.3	6.5	10	3.2	0.20
RHC7.5C-2EJ										
RHC11C-2EJ										
RHC15C-2EJ										
RHC18.5C-2EJ	CR120-2OHM	182	169	41	22	4.3	6.5	10	3.2	0.24
RHC22C-2EJ										
RHC5.5C-4EJ	CR60-30OHM	100	87	41	22	4.3	6.5	13	3.2	0.11
RHC7.5C-4EJ										
RHC11C-4EJ										
RHC15C-4EJ										
RHC18.5C-4EJ	CR80-7.5OHM	150	137	41	22	4.3	6.5	10	3.2	0.20
RHC22C-4EJ										
RHC30C-4EJ										
RHC37C-4EJ										
RHC45C-4EJ										
RHC55C-4EJ										
RHC75C-4EJ										

11.9 DC Reactors (DCRs)

These reactors are mainly used for “coordinating power supply” and “improving input power factor (for reducing harmonics)”. If connecting to an HND specification inverter, select with an HND specification standard applicable motor.

Note If using motors with output of 75 kW or higher, be sure to use a DC reactor (DCR).

For coordinating power supply

- Use a DCR when the capacity of a power supply transformer exceeds 500 kVA and is 10 times or more the rated inverter capacity. In this case, the percent reactance of the power supply decreases, and harmonic components and their peak value increase. These factors may break rectifiers or capacitors in the converter section of inverter, or decrease the capacitance of the capacitor (which can shorten the inverter’s service life).
- Also use a DCR when there are thyristor-driven loads or when phase-advancing capacitors are being turned ON/OFF.
- Use a DCR when the interphase voltage unbalance ratio of the inverter power supply exceeds 2%.

$$\text{Interphase voltage unbalance (\%)} = \frac{\text{Max. voltage (V)} - \text{Min. voltage (V)}}{\text{Three-phase average voltage (V)}} \times 67$$

For input power factor correction (for suppressing harmonics)

Generally a capacitor is used to improve the power factor of the load, however, it cannot be used in a system that includes an inverter. Using a DCR increases the reactance of inverter’s power supply so as to decrease harmonic components on the power supply lines and improve the power factor of inverter. Using a DCR improves the input power factor to approximately 86% to 95%.

Note
- At the time of shipping, a jumper bar is connected across terminals P1 and P (+) on the terminal block. Remove the jumper bar when connecting a DCR.
  (A shorting bar is not connected on inverters (FRN0346, 0432G2S-2G/FRN0217 to 1480G2■-4G).)
- If a DCR is not going to be used, do not remove the jumper bar.

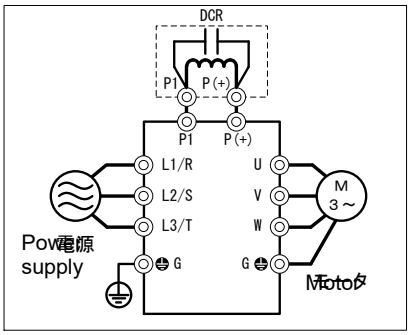

FRENIC-MEGA

Fig. 11.9-1 External view of DC reactor (DCR) and connection example

Table 11.9-1 DC reactor (DCR)

Power system	Standard applicable motor (kW) [HP]	Inverter type	Specification	Reactor type	Rated current (A)	Inductance (mh)	Generated loss (W)
Three-phase 200 V	0.4 [1/2]	FRN0003G2S-2G	HHD	DCR2-0.4	3	12	1.9
	0.75 [1]	FRN0005G2S-2G		DCR2-0.75	5	7	2.8
	1.5 [2]	FRN0008G2S-2G		DCR2-1.5	8	4	4.6
	2.2 [3]	FRN0011G2S-2G		DCR2-2.2	11	3	6.7
	3.7 [5]	FRN0018G2S-2G		DCR2-3.7	18	1.7	8.8
	5.5 [7.5]	FRN0032G2S-2G	HHD	DCR2-5.5	25	1.2	14
	7.5 [10]		HND	DCR2-7.5	34	0.8	16
		FRN0046G2S-2G	HHD				
	11 [15]		HND	DCR2-11	50	0.6	27
		FRN0059G2S-2G	HHD				
	15 [20]		HND	DCR2-15	67	0.4	27
		FRN0075G2S-2G	HHD				
	18.5 [25]		HND	DCR2-18.5	81	0.35	29
		FRN0088G2S-2G	HHD				
	22 [30]		HND	DCR2-22A	98	0.3	38
		FRN0115G2S-2G	HHD				
	30 [40]		HND	DCR2-30B	136	0.23	37
		FRN0146G2S-2G	HHD				
	37 [50]		HND	DCR2-37B/ DCR2-37C	167/ 175	0.19/ 0.119	47/ 63
		FRN0180G2S-2G	HHD				
	45 [60]		HND	DCR2-45B/ DCR2-45C	203/ 213	0.16/ 0.1	52/ 68
		FRN0215G2S-2G	HHD				
	55 [75]		HND	DCR2-55B/ DCR2-55C	244/ 256	0.13/ 0.08	55/ 75
		FRN0288G2S-2G	HHD				
	75 [100]		HND	DCR2-75C	358	0.05	96
		FRN0346G2S-2G	HHD				
	90 [125]		HND	DCR2-90C	431	0.042	100
		FRN0432G2S-2G	HHD				
	110 [150]		HND	DCR2-110C	552	0.034	126

(Note 1) Generated losses listed in the above tables are approximate values that are calculated according to the following conditions:

- The power supply is 200 V or 400 V 50 Hz with 0% interphase voltage unbalance ratio.
- The capacity of the power supply used is the larger of either 500 kVA or 10 times the rated capacity of the inverter.
- The motor is a 4-pole standard model at full load (100%).
- An AC reactor (ACR) is not connected.

(Note 2) Power factor based on differences in reactor type (at rated output)

DCR2/4-□□/□□A/□□B input power factor: approx. 90 to 95%

DCR2/4-□□C input power factor: approx. 86 to 90%

The standard applicable motor lineup also includes a DCR2/4-□□B type for 75 kW or higher models. Please contact Fuji Electric for details.

Table 11.9-1 DC reactor (DCR) (cont.)

Power system	Standard applicable motor (kW) [HP]	Inverter type	Specification	Reactor type	Rated current (A)	Inductance (mh)	Generated loss (W)
Three-phase 400 V	0.4 [1/2]	FRN0002G2□-4G	HHD	DCR4-0.4	1.5	50	2
	0.75 [1]	FRN0003G2□-4G		DCR4-0.75	2.5	30	2.5
	1.5 [2]	FRN0004G2□-4G		DCR4-1.5	4	16	4.8
	2.2 [3]	FRN0006G2□-4G		DCR4-2.2	5.5	12	6.8
	3.7 [5]	FRN0009G2□-4G		DCR4-3.7	9	7	8.1
	5.5 [7.5]	FRN0018G2□-4G	HHD	DCR4-5.5	13	4	10
	7.5 [10]		HND	DCR4-7.5	18	3.5	15
		FRN0023G2□-4G	HHD				
	11 [15]		HND	DCR4-11	25	2.2	21
		FRN0035G2□-4G	HHD				
	15 [20]		HND	DCR4-15	34	1, 8	28
		FRN0041G2□-4G	HHD				
	18.5 [25]		HND	DCR4-18.5	41	1.4	29
		FRN0045G2□-4G	HHD				
	22 [30]		HND	DCR4-22A	49	1.2	35
		FRN0060G2□-4G	HHD				
	30 [40]		HND	DCR4-30B	71	0.86	35
		FRN0085G2□-4G	HHD				
	37 [50]		HD/HND	DCR4-37B/ DCR4-37C	88/ 88	0.70/ 0.483	40/ 63
		FRN0105G2□-4G	HHD				
	45 [60]	FRN0085G2□-4G	ND	DCR4-45B/ DCR4-45C	107/ 107	0.58/ 0.4	44/ 69
		FRN0105G2□-4G	HD/HND				
		FRN0139G2□-4G	HHD				
	55 [75]	FRN0105G2□-4G	ND	DCR4-55B/ DCR4-55C	131/ 131	0.47/ 0.324	55/ 78
		FRN0139G2□-4G	HD/HND				
		FRN0179G2□-4G	HHD				
	75 [100]	FRN0139G2□-4G	ND	DCR4-75C	178	0.23	97
		FRN0179G2□-4G	HD/HND				
		FRN0217G2□-4G	HHD				
	90 [125]	FRN0179G2□-4G	ND	DCR4-90C	214	0.2	111
	90 [150]	FRN0217G2□-4G	HD				
		FRN0261G2□-4G	HHD				
	110 [150]	FRN0217G2□-4G	HND/ND	DCR4-110C	261	0.166	122
		FRN0261G2□-4G	HD				
		FRN0290G2□-4G	HHD				
	132 [200]	FRN0261G2□-4G	HND/ND	DCR4-132C	313	0.148	159
		FRN0290G2□-4G	HD				
		FRN0376G2□-4G	HHD				
	160 [200]	FRN0290G2□-4G	HND/ND	DCR4-160C	380	0.122	185
	160 [250]	FRN0376G2□-4G	HD				
		FRN0431G2□-4G	HHD				
	200 [300]	FRN0376G2□-4G	HND/ND	DCR4-200C	475	0.098	218
		FRN0431G2□-4G	HD				
		FRN0547G2□-4G	HHD				
	220 [350]	FRN0431G2□-4G	HND/ND	DCR4-220C	524	0.087	231
		FRN0547G2□-4G	HD				
		FRN0610G2□-4G	HHD				
	250 [400]	FRN0610G2□-4G	HD	DCR4-250C	589	0.077	249
	280 [450]	FRN0547G2□-4G	HND/ND	DCR4-280C	649	0.069	270
	280 [400]	FRN0739G2□-4G	HHD				
	315 [500]	FRN0610G2□-4G	HND/ND	DCR4-315C	739	0.061	285
	315 [450]	FRN0739G2□-4G	HD				
		FRN0840G2□-4G	HHD				
	355 [500]	FRN0739G2□-4G	HND	DCR4-355C	833	0.054	308
		FRN0840G2□-4G	HD				
		FRN1039G2□-4G	HHD				
	400 [600]	FRN0739G2□-4G	ND	DCR4-400C	938	0.048	323
		FRN0840G2□-4G	HND				
		FRN1039G2□-4G	HD				
		FRN1169G2□-4G	HHD				
	450 [700]	FRN0840G2□-4G	ND	DCR4-450C	1056	0.043	338
		FRN1169G2□-4G	HD				
	500 [800]	FRN1039G2□-4G	HND	DCR4-500C	1173	0.039	384
		FRN1385G2□-4G	HHD				

	560 [900]	FRN1039G2□-4G	ND	DCR4-560C	1314	0.035	580
		FRN1169G2□-4G	HND				
		FRN1385G2□-4G	HD				
	630 [900]	FRN1169G2□-4G	ND	DCR4-630C	1477	0.031	620
		FRN1385G2□-4G	HND				
		FRN1480G2□-4G	HHD				
	710 [1200]	FRN1385G2□-4G	ND	DCR4-710C	1666	0.028	600
		FRN1480G2□-4G	HND				
	800 [1300]	FRN1480G2□-4G	ND	DCR4-800B	1876	0.035	610

(Note 1) □ is replaced by a letter of the alphabet indicating the inverter type.

□
└ S (basic type), E (type with built-in EMC filter)

(Note 2) Generated losses listed in the above tables are approximate values that are calculated according to the following conditions:

- The power supply is 200 V or 400 V 50 Hz with 0% interphase voltage unbalance ratio.
- The capacity of the power supply used is the larger of either 500 kVA or 10 times the rated capacity of the inverter.
- The motor is a 4-pole standard model at full load (100%).
- An AC reactor (ACR) is not connected.

(Note 3) Power factor based on differences in reactor type (at rated output)

DCR2/4-□□/□□A/□□B input power factor: approx. 90 to 95%

DCR2/4-□□C input power factor: approx. 86 to 90%

The standard applicable motor lineup also includes a DCR2/4-□□B type for 75 kW or higher models. Please contact Fuji Electric for details.

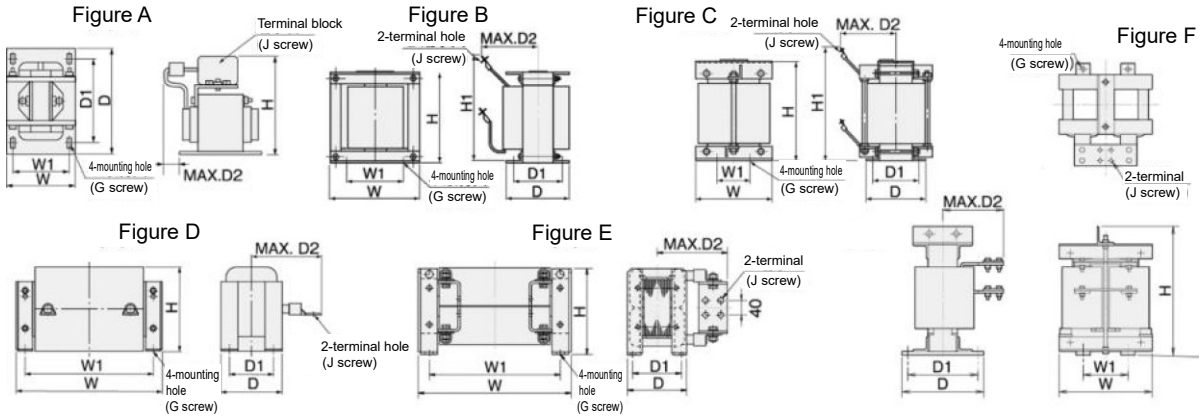

Table 11.9-2 DC reactor (DCR) external dimensions

Power system	Reactor type	Figure	Dimensions (mm)									Approx. Weight (kg)
			W	W1	D	D1	D2	H	H1	Mounting hole G	Terminal hole J	
Three-phase 200 V	DCR2-0.4	A	66	56	90	72	15	94	-	M4 (5.2 x 8)	M4	1.0
	DCR2-0.75	A	66	56	90	72	20	94	-	M4 (5.2 x 8)	M4	1.4
	DCR2-1.5	A	66	56	90	72	20	94	-	M4 (5.2 x 8)	M4	1.6
	DCR2-2.2	A	86	71	100	80	10	110	-	M5 (6 x 9)	M4	1, 8
	DCR2-3.7	A	86	71	100	80	20	110	-	M5 (6 x 9)	M4	2.6
	DCR2-5.5	A	111	95	100	80	20	130	-	M6 (7 x 11)	M5	3, 6
	DCR2-7.5	A	111	95	100	80	23	130	-	M6 (7 x 11)	M5	3.8
	DCR2-11	A	111	95	100	80	24	137	-	M6 (7 x 11)	M6	4.3
	DCR2-15	A	146	124	120	96	15	180	-	M6 (7 x 11)	M8	5.9
	DCR2-18.5	A	146	124	120	96	25	180	-	M6 (7 x 11)	M8	7.4
	DCR2-22A	A	146	124	120	96	25	180	-	M6 (7 x 11)	M8	7.5
	DCR2-30B	B	152	90	156	116	115	130	190	M6 (φ8)	M10	12
	DCR2-37B DCR2-37C	B/ D	171/ 210	110/ 185	151/ 101	110/ 81	115/ 125	150/ 125	200/ -	M6 (φ8)/ M6 (7 x 13)	M10/ M10	14/ 7.4
	DCR2-45B DCR2-45C	B/ D	171/ 210	110/ 185	166/ 106	125/ 86	120/ 135	150/ 125	200/ -	M6 (φ8)/ M6 (7 x 13)	M10/ M12	16/ 8.4
	DCR2-55B DCR2-55C	C/ D	190/ 255	160/ 225	131/ 96	90/ 76	100/ 140	210/ 145	250/ -	M6 (φ8)/ M6 (7 x 13)	M12/ M12	16/ 11
	DCR2-75C	D	255	225	106	86	145	145	-	M6 (7 x 13)	M12	12
	DCR2-90C	D	255	225	116	96	155	145	-	M6 (7 x 13)	M12	14
	DCR2-110C	D	300	265	116	90	185	160	-	M8 (10 x 18)	M12	17

Table 11.9-2 DC reactor (DCR) external dimensions (cont.)

Power system	Reactor type	Figure	Dimensions (mm)									Approx. Weight (kg)
			W	W1	D	D1	D2	H	H1	Mounting hole G	Terminal hole J	
Three-phase 400 V	DCR4-0.4	A	66	56	90	72	15	94	-	M4 (5.2 x 8)	M4	1.0
	DCR4-0.75	A	66	56	90	72	20	94	-	M4 (5.2 x 8)	M4	1.4
	DCR4-1.5	A	66	56	90	72	20	94	-	M4 (5.2 x 8)	M4	1.6
	DCR4-2.2	A	86	71	100	80	15	110	-	M5 (6 x 9)	M4	2.0
	DCR4-3.7	A	86	71	100	80	20	110	-	M5 (6 x 9)	M4	2.6
	DCR4-5.5	A	86	71	100	80	20	110	-	M5 (6 x 9)	M4	2.6
	DCR4-7.5	A	111	95	100	80	24	130	-	M6 (7 x 11)	M5	4.2
	DCR4-11	A	111	95	100	80	24	130	-	M6 (7 x 11)	M5	4.3
	DCR4-15	A	146	124	120	96	15	168	-	M6 (7 x 11)	M5	5.9
	DCR4-18.5	A	146	124	120	96	25	171	-	M6 (7 x 11)	M6	7.2
	DCR4-22A	A	146	124	120	96	25	171	-	M6 (7 x 11)	M6	7.2
	DCR4-30B	B	152	90	157	115	100	130	190	M6 (φ8)	M8	13
	DCR4-37B/ DCR4-37C	B/ D	171/ 210	110/ 185	150/ 101	110/ 81	100/ 105	150/ 125	200/ -	M6 (φ8)/ M6 (7 x 13)	M8/ M8	15/ 7.4
	DCR4-45B/ DCR4-45C	B/ D	171/ 210	110/ 185	165/ 106	125/ 86	110/ 120	150/ 125	210/ -	M6 (φ8)/ M6 (7 x 13)	M8/ M8	18/ 8.4
	DCR4-55B/ DCR4-55C	B/ D	171/ 255	110/ 225	170/ 96	130/ 76	110/ 120	150/ 145	210/ -	M6 (φ8)/ M6 (7 x 13)	M8/ M10	20/ 11
	DCR4-75C	D	255	225	106	86	125	145	-	M6 (7 x 13)	M10	13
	DCR4-90C	D	255	225	116	96	140	145	-	M6 (7 x 13)	M12	15
	DCR4-110C	D	300	265	116	90	175	155	-	M8 (10 x 18)	M12	19
	DCR4-132C	D	300	265	126	100	180	160	-	M8 (10 x 18)	M12	22
	DCR4-160C	D	350	310	131	103	180	190	-	M10 (12 x 22)	M12	26
	DCR4-200C	D	350	310	141	113	185	190	-	M10 (12 x 22)	M12	30
	DCR4-220C	D	350	310	146	118	200	190	-	M10 (12 x 22)	M12	33
	DCR4-250C	D	350	310	161	133	210	190	-	M10 (12 x 22)	M12	35
	DCR4-280C	D	350	310	161	133	210	190	-	M10 (12 x 22)	M16	37
	DCR4-315C	D	400	345	146	118	200	225	-	M10 (12 x 22)	M16	40
	DCR4-355C	E	400	345	156	128	200	225	-	M10 (12 x 22)	4 x M12	49
	DCR4-400C	E	455	385	145	117	213	245	-	M10 (12 x 22)	4 x M12	52
	DCR4-450C	E	440	385	150	122	215	245	-	M10 (12 x 22)	4 x M12	62
	DCR4-500C	E	445	390	165	137	220	245	-	M10 (12 x 22)	4 x M12	72
	DCR4-560C	F	270	145	203	170	195	480	-	M12 (14 x 20)	2 x M12	70
	DCR4-630C	F	285	145	203	170	195	480	-	M12 (14 x 20)	2 x M12	75
	DCR4-710C	F	340	160	295	255	225	480	-	M12 (φ15)	4 x M12	95
	DCR4-800B	F	310	255	211	170	205	450	-	M10 (12 x 20)	M12	95

(Note) □ in the inverter type is replaced by a letter of the alphabet.

□
└ S (basic type), E (type with built-in EMC filter)

11.10 AC Reactors (ACRs)

Use an ACR when the converter part of the inverter should supply very stable DC power, for example, in DC link bus operation (shared PN operation). Generally, ACRs are used for correction of voltage waveform and power factor or for power supply matching, but not for suppressing harmonic components in the power lines. For suppressing harmonic components, use a DCR.

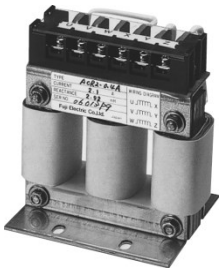

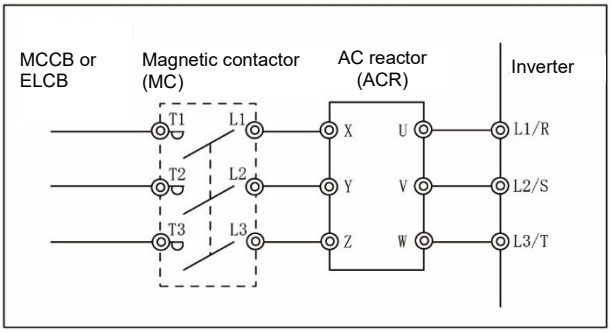

Fig. 11.10-1 AC reactor (ACR) and connection example

Table 11.10-1 AC reactor (ACR) specifications

Power system	Standard applicable motor (kW) [HP]	Inverter type	Specification	Reactor type	Rated current (A)	Reactance (mΩ/phase)		Coil resistance (mΩ)	Generated loss (W)
						50 Hz	60 Hz		
Three-phase 200 V	0.4 [1/2]	FRN0003G2S-2G	HHD	ACR2-0.4A	3	917	1100	-	10
	0.75 [1]	FRN0005G2S-2G		ACR2-0.75 A	5	493	592	-	12
	1.5 [2]	FRN0008G2S-2G		ACR2-1.5 A	8	295	354	-	14
	2.2 [3]	FRN0011G2S-2G		ACR2-2.2 A	11	213	256	-	16
	3.7 [5]	FRN0018G2S-2G		ACR2-3.7 A	17	128	153	-	23
	5.5 [7.5]	FRN0032G2S-2G	HHD	ACR2-5.5 A	25	87.7	105	-	27
	7.5 [10]		HND	ACR2-7.5 A	33	65	78	-	30
		FRN0046G2S-2G	HHD						
	11 [15]		HND	ACR2-11A	46	45.5	54.7	-	37
		FRN0059G2S-2G	HHD						
	15 [20]		HND	ACR2-15A	59	34.8	41.8	-	43
		FRN0075G2S-2G	HHD						
	18.5 [25]		HND	ACR2-18.5 A	74	28.6	34.3	-	51
		FRN0088G2S-2G	HHD						
	22 [30]		HND	ACR2-22A	87	24	28.8	-	57
		FRN0115G2S-2G	HHD						
	30 [40]		HND	ACR2-37	200	10.8	13	0.5	28.6
		FRN0146G2S-2G	HHD						
	37 [50]		HND	ACR2-37	200	10.8	13	0.5	40.8
		FRN0180G2S-2G	HHD						
	45 [60]		HND	ACR2-55	270	7.5	9	0.375	47.1
		FRN0215G2S-2G	HHD						
	55 [75]		HND	ACR2-55	270	7.5	9	0.375	66.1
		FRN0288G2S-2G	HHD						
	75 [100]		HND	ACR2-75	390	5.45	6.54	0.25	55.1
		FRN0346G2S-2G	HHD						
	90 [125]		HND	ACR2-90	450	4.73	5.67	0.198	61.5
		FRN0432G2S-2G	HHD						
	110 [150]		HND	ACR2-110	500	4.25	5.1	0.18	83.4

(Note 1) Generated losses listed in the above tables are approximate values that are calculated according to the following conditions:

- The power supply is 200 V or 400 V 50 Hz with 0% interphase voltage unbalance ratio.
- The capacity of the power supply used is the larger of either 500 kVA or 10 times the rated capacity of the inverter.
- The motor is a 4-pole standard model at full load (100%).

Table 11.10-1 AC reactor (ACR) specifications (cont.)

Power system	Standard applicable motor (kW) [HP]	Inverter type	Specification	Reactor type	Rated current (A)	Reactance (mΩ/phase) 50 Hz	Reactance (mΩ/phase) 60 Hz	Coil resistance (mΩ)	Generated loss (W)
Three-phase 400 V	0.4 [1/2]	FRN0002G2□-4G	HHD	ACR4-0.75 A	2.5	1920	2300	-	5
	0.75 [1]	FRN0003G2□-4G							10
	1.5 [2]	FRN0004G2□-4G		ACR4-1.5 A	3.7	1160	1390	-	11
	2.2 [3]	FRN0006G2□-4G		ACR4-2.2 A	5.5	851	1020	-	14
	3.7 [5]	FRN0009G2□-4G		ACR4-3.7 A	9	512	615	-	17
	5.5 [7.5]	FRN0018G2□-4G	HHD	ACR4-5.5 A	13	349	418	-	22
	7.5 [10]		HND	ACR4-7.5 A	18	256	307	-	27
		FRN0023G2□-4G	HHD						
	11 [15]		HND	ACR4-11A	24	183	219	-	40
		FRN0035G2□-4G	HHD						
	15 [20]		HND	ACR4-15A	30	139	167	-	46
		FRN0041G2□-4G	HHD						
	18.5 [25]		HND	ACR4-18.5 A	39	114	137	-	57
		FRN0045G2□-4G	HHD						
	22 [30]		HND	ACR4-22A	45	95.8	115	-	62
		FRN0060G2□-4G	HHD						
	30 [40]		HND	ACR4-37	100	41.7	50	2.73	38.9
		FRN0085G2□-4G	HHD						
	37 [50]		HD/HND	ACR4-37	100	41.7	50	2.73	55.7
		FRN0105G2□-4G	HHD						
	45 [60]	FRN0085G2□-4G	ND	ACR4-55	135	30.8	37	1.61	50.2
		FRN0105G2□-4G	HD/HND						
		FRN0139G2□-4G	HHD						
	55 [75]	FRN0105G2□-4G	ND	ACR4-55	135	30.8	37	1.61	70.7
		FRN0139G2□-4G	HD/HND						
		FRN0179G2□-4G	HHD						
	75 [100]	FRN0139G2□-4G	ND	ACR4-75 *	160	25.8	31	1.16	65.3
		FRN0179G2□-4G	HD/HND						
		FRN0217G2□-4G	HHD						
	90 [150]	FRN0179G2□-4G	ND	ACR4-110	250	16.7	20	0.523	42.2
		FRN0217G2□-4G	HD						
		FRN0261G2□-4G	HHD						
	110 [150]	FRN0217G2□-4G	HND/ND						60.3
		FRN0261G2□-4G	HD						
		FRN0290G2□-4G	HHD						
	132 [200]	FRN0261G2□-4G	HND/ND	ACR4-132 *	270	20.8	25	0.741	119
		FRN0290G2□-4G	HD						
		FRN0376G2□-4G	HHD						
	160 [200]	FRN0290G2□-4G	HND/ND	ACR4-220	561	10	12	0.236	56.4
	160 [250]	FRN0376G2□-4G	HD						
		FRN0431G2□-4G	HHD						
	200 [300]	FRN0376G2□-4G	HND/ND	ACR4-220	561	10	12	0.236	90.4
		FRN0431G2□-4G	HD						
		FRN0547G2□-4G	HHD						
	220 [350]	FRN0431G2□-4G	HND/ND	ACR4-220	561	10	12	0.236	107
		FRN0547G2□-4G	HD						
		FRN0610G2□-4G	HHD						
	250 [400]	FRN0610G2□-4G	HD	ACR4-280	825	6.67	8	0.144	96.4
	280 [400]	FRN0739G2□-4G	HHD						108
	280 [450]	FRN0547G2□-4G	HND/ND						
	315 [500]	FRN0610G2□-4G	HND/ND	ACR4-355	825	6.67	8	0.144	194
	315 [450]	FRN0739G2□-4G	HD						
		FRN0840G2□-4G	HHD						
	355 [500]	FRN0739G2□-4G	HND	ACR4-355 *	825	6.67	8	0.144	245
		FRN0840G2□-4G	HD						
		FRN1039G2□-4G	HHD						
	400 [600]	FRN0739G2□-4G	ND	ACR4-450	950	6.67	8	0.136	380
		FRN0840G2□-4G	HND						
		FRN1039G2□-4G	HD						
		FRN1169G2□-4G	HHD						
	450 [700]	FRN0840G2□-4G	ND	ACR4-450	950	6.67	8	0.136	380
		FRN1169G2□-4G	HD						
	500 [800]	FRN1039G2□-4G	HND	ACR4-530	1100	5.75	6.9	0.0824	340
		FRN1385G2□-4G	HHD						
	560 [900]	FRN1039G2□-4G	ND	ACR4-630	1300	4.87	5.84	0.0713	422
		FRN1169G2□-4G	HND						
		FRN1385G2□-4G	HD						

630 [900]	FRN1169G2□-4G	ND	ACR4-630	1300	4.87	5.84	0.0713	422
	FRN1385G2□-4G	HND						
	FRN1480G2□-4G	HHD						
710 [1200]	FRN1385G2□-4G	ND	-	-	-	-	-	-
	FRN1480G2□-4G	HD/HND						
800 [1300]	FRN1480G2□-4G	ND						

* Perform fan cooling (3 m/s or more).

(Note 1) □ is replaced by a letter of the alphabet indicating the inverter type.

□
└─ S (basic type), E (type with built-in EMC filter)

(Note 2) Generated losses listed in the above tables are approximate values that are calculated according to the following conditions:

- The power supply is 200 V or 400 V 50 Hz with 0% interphase voltage unbalance ratio.
- The capacity of the power supply used is the larger of either 500 kVA or 10 times the rated capacity of the inverter.
- The motor is a 4-pole standard model at full load (100%).

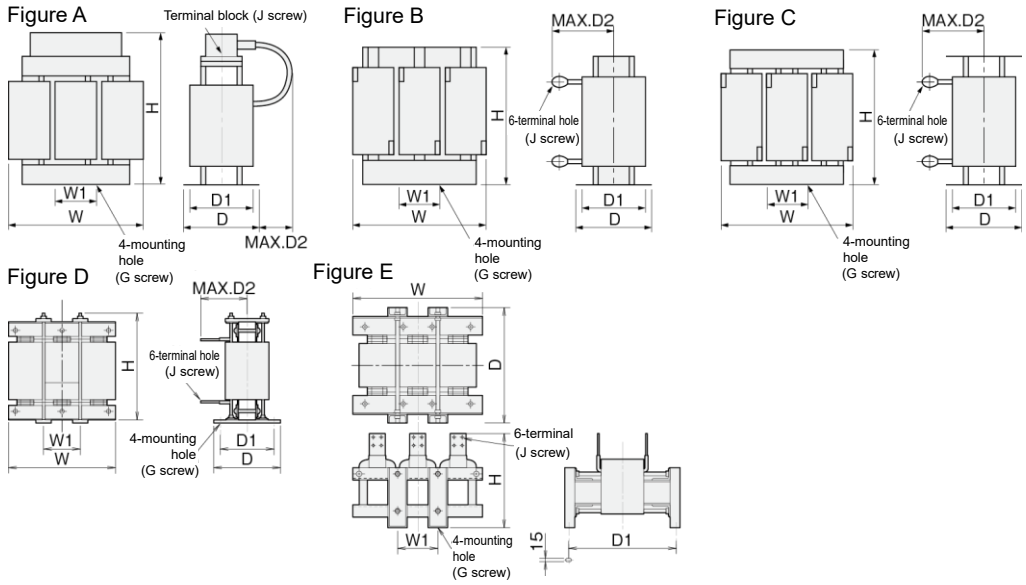

Fig. 11.10-2

Table 11.10-2 AC reactor (ACR) external dimensions

Power system	Reactor type	Figure	Dimensions (mm)								Approx. Weight (kg)
			W	W1	D	D1	D2	G	H	Terminal hole J	
Three-phase 200 V	ACR2-0.4A	A	120	40	90	65	20	M5 (6 x 10)	115	M4	1.4
	ACR2-0.75 A		120	40	100	75	20	M5 (6 x 10)	115	M4	1.9
	ACR2-1.5 A		120	40	100	75	20	M5 (6 x 10)	115	M4	2.0
	ACR2-2.2 A		120	40	100	75	20	M5 (6 x 10)	115	M4	2.0
	ACR2-3.7 A		125	40	100	75	25	M5 (6 x 10)	125	M4	2.4
	ACR2-5.5 A		125	40	115	90	25	M5 (6 x 10)	125	M4	3.1
	ACR2-7.5 A	B	125	40	115	90	106	M5 (6 x 10)	95	M5	3.1
	ACR2-11A		125	40	125	100	106	M5 (6 x 10)	95	M6	3.7
	ACR2-15A		180	60	110	85	106	M6 (7 x 11)	115	M6	4.8
	ACR2-18.5 A		180	60	110	85	109	M6 (7 x 11)	115	M6	5.1
	ACR2-22A		180	60	110	85	109	M6 (7 x 11)	115	M6	5.1
	ACR2-37		190	60	120	90	172	M6 (7 x 11)	190	M8	11
	ACR2-55	C	190	60	120	90	200	M6 (7 x 11)	190	M12	13
	ACR2-75		250	100	120	90	200	M8 (9 x 14)	250	M12	25
	ACR2-90		285	190	158	120	190	M10 (12 x 20)	210	M12	26
	ACR2-110		280	150	138	110	200	M8 (10 x 20)	270	M12	30

Table 11.10-2 AC reactor (ACR) external dimensions (cont.)

Power system	Reactor type	Figure	Dimensions (mm)								Approx. Weight (kg)
			W	W1	D	D1	D2	G	H	Terminal hole J	
Three-phase 400 V	ACR4-0.75 A	B	120	40	90	65	106	M5 (6 x 10)	85	M4	1.1
	ACR4-1.5 A		125	40	100	75	106	M5 (6 x 10)	85	M4	1.9
	ACR4-2.2 A		125	40	100	75	106	M5 (6 x 10)	95	M4	2.2
	ACR4-3.7 A		125	40	100	75	106	M5 (6 x 10)	95	M4	2.4
	ACR4-5.5 A		125	40	115	90	106	M5 (6 x 10)	95	M5	3.1
	ACR4-7.5 A		125	40	115	90	106	M5 (6 x 10)	95	M5	3.7
	ACR4-11A		180	60	110	85	106	M6 (7 x 11)	115	M6	4.3
	ACR4-15A		180	60	110	85	106	M6 (7 x 11)	137	M6	5.4
	ACR4-18.5 A		180	60	110	85	106	M6 (7 x 11)	137	M6	5.7
	ACR4-22A		180	60	110	85	106	M6 (7 x 11)	137	M6	5.9
	ACR4-37		190	60	120	90	172	M6 (7 x 11)	190	M8	12
	ACR4-55	C	190	60	120	90	200	M6 (7 x 11)	190	M10	14
	ACR4-75		190	60	126	90	157	M6 (7 x 10)	190	M10	16
	ACR4-110		250	100	136	105	202	M8 (9.5 x 18)	245	M12	24
	ACR4-132		250	100	146	115	207	M8 (10 x 16)	250	M12	32
	ACR4-220		320	120	150	110	240	M10 (12 x 20)	300	M12	40
	ACR4-280		380	130	150	110	260	M10 (12 x 20)	300	M12	52
	ACR4-355		380	130	150	110	260	M10 (12 x 20)	300	M12	52
	ACR4-450	D	460	155	290	230	200	M12 (φ15)	490	4 x M12	95
	ACR4-530	E	480	155	420	370	-	M12 (15 x 25)	380	4 x M12	100
	ACR4-630		510	170	420	370	-	M12 (15 x 25)	390	4 x M12	110

(Note) □ in the inverter type is replaced by a letter of the alphabet.

□
└─ S (basic type), E (type with built-in EMC filter)

11.11 Output Circuit Filters (OFL)

Connect an OFL to the inverter power output side to:

- Suppress the surge voltage at motor terminals

  This protects the motor from insulation damage caused by the application of high voltage surge currents from 400V series inverters.

- Suppress leakage current from output lines

  This reduces leakage current from long power feed lines. (The maximum wire length must be 400 m.)

- Minimize radiation and induction noise from output lines

  An OFL effectively suppresses noise from long lines such as wiring at plants.

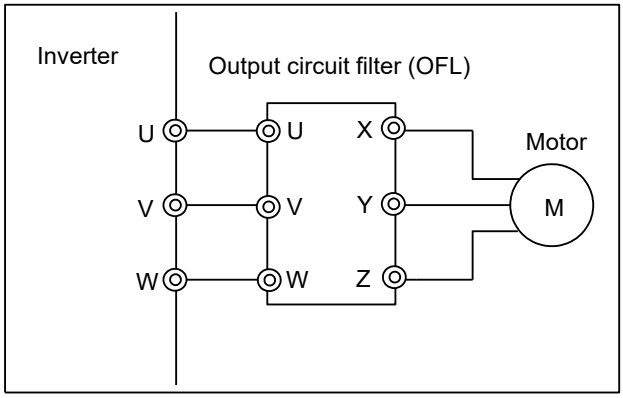

Fig. 11.11-1 External view and connection example for output circuit filter (OFL)

Table 11.11-1 Output circuit filters (OFL)

OFL-□□□-4A

Power system	Standard applicable motor (kW) [HP]	Filter Type	Rated current (A)	Overload capability	Inverter input power supply voltage	Permissible carrier frequency range (kHz)	Max. output frequency (Hz)	Generated loss (W)
Three-phase 400 V	0.4 [1/2]	OFL-0.4-4A	1.5	150% for 1 min 200% for 3 s	Three-phase 380 to 480 V 50/60 Hz	0.75 to 16 kHz	400 Hz	80
	0.75 [1]	OFL-1.5-4A	3.7					105
	1.5 [2]							
	2.2 [3]	OFL-3.7-4A	9					210
	3.7 [5]							
	5.5 [7.5]	OFL-7.5-4A	18					190
	7.5 [10]							
	11 [15]	OFL-15-4A	30					320
	15 [20]							
	18.5 [25]	OFL-22-4A	45					350
	22 [30]							
	30 [40]	OFL-30-4A	60				120 Hz	570
	37 [50]	OFL-37-4A	75					610
	45 [60]	OFL-45-4A	91					810
	55 [75]	OFL-55-4A	112					910
	75 [100]	OFL-75-4A	150			0.75 to 10 kHz		1200
	90 [150]	OFL-90-4A	176					1360
	110 [150]	OFL-110-4A	210					1410
	132 [200]	OFL-132-4A	253					1800
	160 [250]	OFL-160-4A	304					2210
	200 [300]	OFL-200-4A	377					2520
	220 [350]	OFL-220-4A	415					2590
	250 [350]	OFL-280-4A	520					3570
	280 [400]							
	315 [450]	OFL-315-4A	585					3290
	355 [500]	OFL-355-4A	650					3320
	400 [600]	OFL-400-4A	740					3390
	450 [700]	OFL-450-4A	840					3390
	500 [800]	OFL-500-4A	960					4250
	630 [900]	OFL-630-4A	1170					4700

OFL-□□□-4A

■ Filter dimensions (22 kW or lower)

Figure A

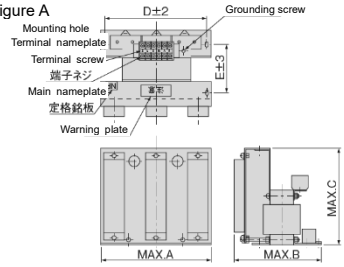

Figure B

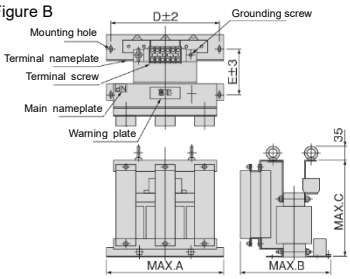

■ Filter dimensions (30 kW or higher): reactors

Figure C

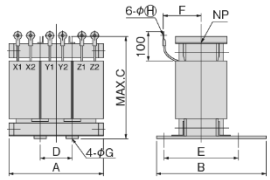

Figure D

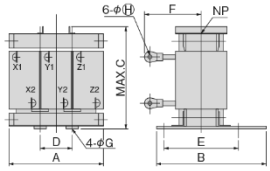

Figure E

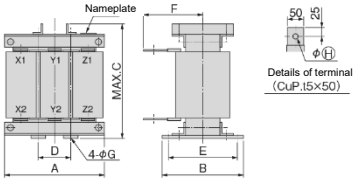

Figure F

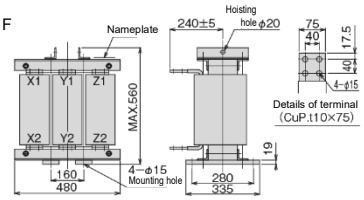

■ Filter dimensions (30 kW or higher): resistors, capacitors

Figure G

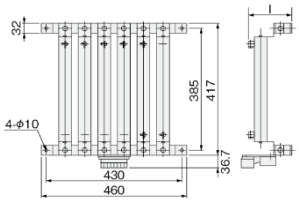

The reactor, and resistors and capacitors are separately installed on OFL-30-4A or higher models. (If ordering a filter type, reactors, resistors, and capacitors are shipped as a set.)

Figure H

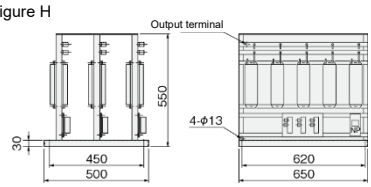

Table 11.11-2 Filter for output circuit (external dimensions)

Type		Figure	Dimension [mm]										Weight [kg]		
			A	B	C	D	E	F	I	Grounding screw	Terminal screw H	Mounting screw (G: mounting hole)	Filters	Reactors	Resistors, capacitors
400V series	OFL-0.4-4A	A	220	175	195	200	95	-	-	M4	M4	M5	7	-	-
	OFL-1.5-4A														
	OFL-3.7-4A			225	220		115						14		
	OFL-7.5-4A		290	290	230	260	160			M5	M5	M6	22		
	OFL-15-4A	B	330	275	310	300	145			M6	M6	M8	35		
	OFL-22-4A			300	330		170						45		
	OFL-30-4A	C, G	210	175	210	70	140	90	160	-	6.4	8	-	12	3
	OFL-37-4A		220	190	220	75	150	95						15	5.5
	OFL-45-4A	D, G		195	265	70	155	140			8.4	10		17	
	OFL-55-4A		260	200	275	85	160	150						22	
	OFL-75-4A			210	290		170		233		10.5	12		25	10
	OFL-90-4A							155						28	
	OFL-110-4A		300	230	330	100	190	170						38	
	OFL-132-4A			240	340		200				13			42	
	OFL-160-4A							180						48	13
	OFL-200-4A		320	270	350	105	220	190	333			15		60	16
	OFL-220-4A		340	300	390	115	250							70	
	OFL-280-4A		350		430			200						78	19
	OFL-315-4A	E, H	440	275	450	150	230	170	-		15			90	36
	OFL-355-4A			290	480		245	175						100	
	OFL-400-4A			295	510		240							110	
	OFL-450-4A			325	470		270	195						125	
	OFL-500-4A			335	500		280	210						145	
	OFL-630-4A	F, H	480	335	560	160	280	240						170	

* Carrier frequency is not restricted on the OFL-***-4A.

11.12 Zero-phase Reactors for Suppressing Radio Noise (ACL)

An ACL is used to reduce radio frequency noise emitted from the inverter output wiring, and therefore inverter output wiring should be passed through the ACL. Pass all four wires including the three inverter output wires and grounding wire through the ACL in the same direction. If using shielded wires, the shields should also be passed through the ACL. Be sure to use wires with heat resistance of 75 °C (167 °F) or higher. It is recommended that wiring should be passed though in a single turn.

The ACL absorbs high-frequency noise components and emits them as heat into the air so that the amount of heat generation can be large. If it happens, lower the carrier frequency, upgrade the heat-resistance rank of wires, increase the number of the ACLs to decrease the number of turns per ACL, replace the ACLs with higher type ones, or take any other measures.

The wire size is determined depending upon the ACL size (I.D.) and installation requirements. Refer to Table 11.12-1.

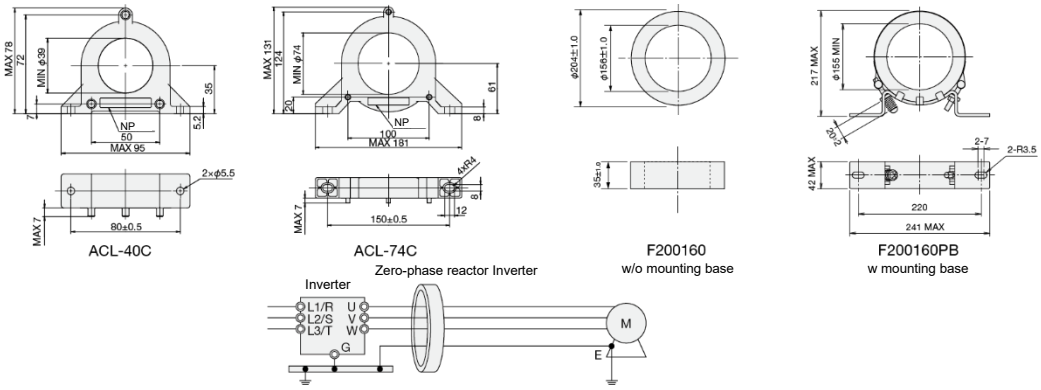

Fig. 11.12-1 External dimensions and connection example for zero-phase reactor for suppressing radio noise (ACL)

Table 11.12-1 Zero-phase reactors for suppressing radio noise (ACL)

No. of turns	Inverter output wire size		Applicable zero-phase reactor
	75 °C, 90 °C wire *1	75 °C wire (AWG) *2	
1	38 mm^2 or less 5.5 mm^2 × 2P to 22 mm^2 × 2P	1AWG or less AWG 10 × 2P to AWG 4 × 2P	ACL-40C
	250 mm^2 or less 38 mm^2 × 2P to 100 mm^2 × 2P	500 kcmil or less AWG 2 × 2P to AWG 4/0 × 2P	ACL-74C
	150 mm^2×2P to 325 mm^2×2P 150 mm^2×3P to 325 mm^2×3P 250 mm^2×4P to 325 mm^2×4P	250 kcmil×2P to 600 kcmil×2P 250 kcmil×3P to 600 kcmil×3P 400 kcmil×4P to 600 kcmil×4P	F200160, F200160PB
2	14 mm^2 or less	AWG 6 or less	ACL-40C
	60 mm^2 or less 5.5 mm^2 × 2P to 22 mm^2 × 2P	AWG 1/ or less AWG 10 × 2P to AWG 4 × 2P	ACL-74C
4	5.5 mm^2 or less	AWG 10 or less	ACL-40C
	14 mm^2 or less	AWG 6 or less	ACL-74C

*1 HIV (heat-resistant polyvinyl chloride insulated wire) and crosslinked polyethylene are anticipated.

*2 THW (heat-resistant IV cable) is anticipated.

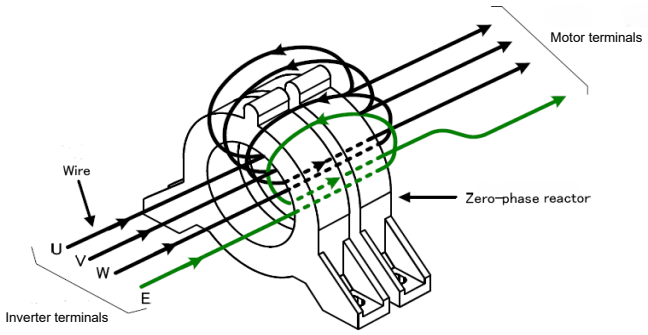

Fig. 11.12-2 Connection example for 2 reactors x 2 turns = 4 turns

11.13 External Cooling Fan Attachments

The use of an external cooling attachment for FRN0032 to 0115G2S-2G/FRN0018 to 0060G2□-4G allows cooling fins to be directed outside the panel. This enhances cooling efficiency, and allows the panel size to be reduced. It can release from the panel approximately 70% of the inverter's generated loss.
Installation with external cooling is possible for units of FRN0146 to 0432G2S-2G/FRN0085 to 1480G2□-4G by moving the mounting base.

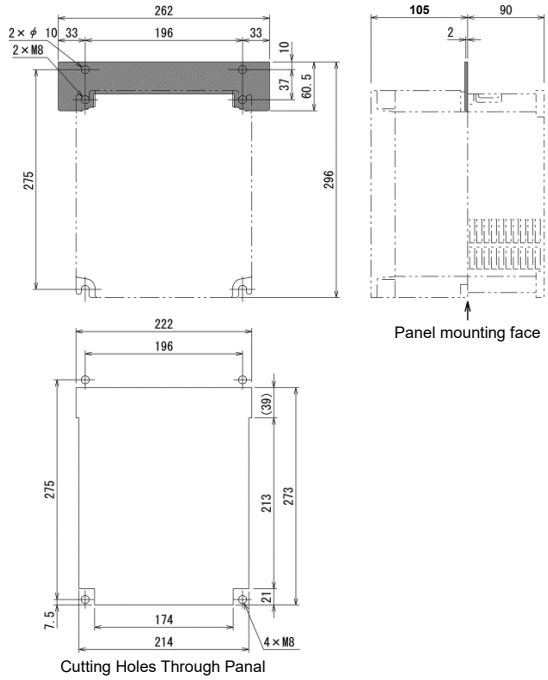

Option type	Applicable inverter type
PB-F1-15	FRN0032G2S-2G/FRN0018G2□-4G
	FRN0046G2S-2G/FRN0023G2□-4G
	FRN0059G2S-2G/FRN0035G2□-4G

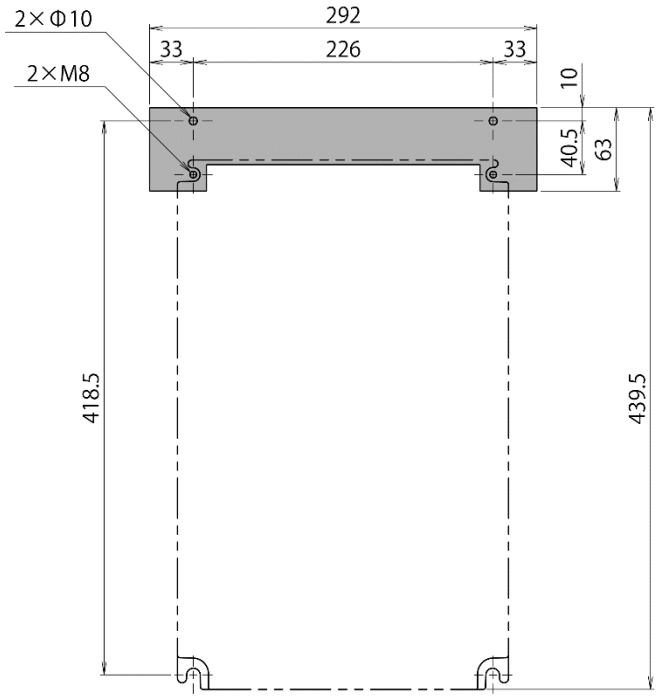

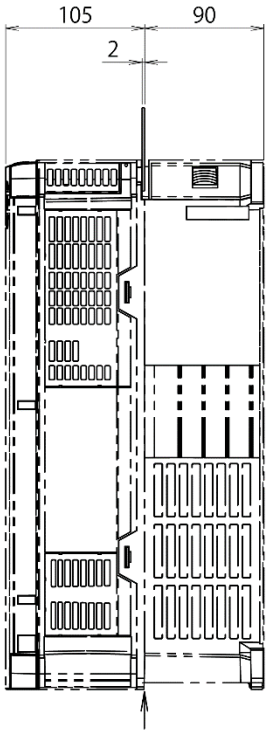

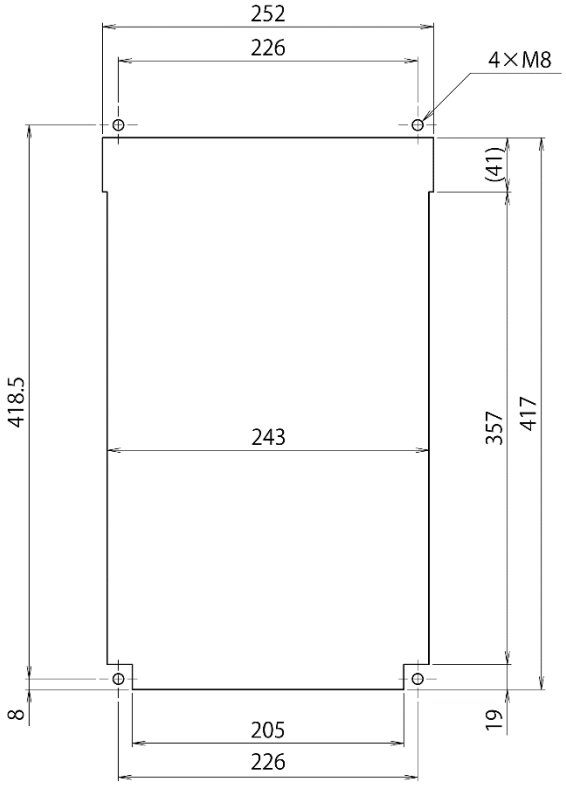

Cutting Holes Through Panal

Option type	Applicable inverter type
PB-F1-30	FRN0075G2S-2G/FRN0041G2□-4G
	FRN0088G2S-2G/FRN0045G2□-4G
	FRN0115G2S-2G/FRN0060G2□-4G

11.14 IP40 Compatibility Attachment (P40ST-F□1)

(1) Overview

The inverter protective construction can be changed from IP20 (enclosed type) to IP40 (fully-enclosed type) by installing the IP40 compatibility attachment on FRENIC-MEGA standard specification 1 (basic type).

(2) Configuration

Table 11.14-1

Type	Configuration
P40ST-FA1	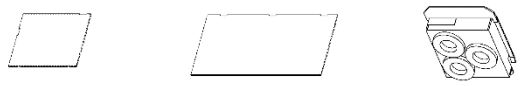 Closing plate (side face, small) x 3 Closing plate (side face, large) x 1 Wiring cover x 1
P40ST-FB 1	Closing plate (side face, small) x 3 Closing plate (side face, large) x 1 Wiring cover x 1
P40ST-FC1	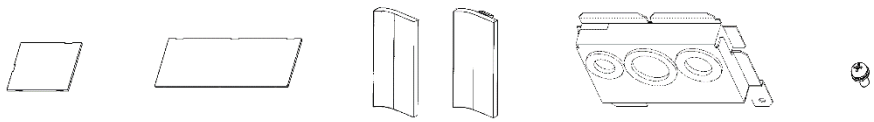 Closing plate (side face, small) x 3 Closing plate (side face, large) x 1 Closing plate (right corner) x 1 (left corner) x 1 Wiring cover x 1 Cross recessed head screw with captive washer x 2 (M5x10)
P40ST-FD1	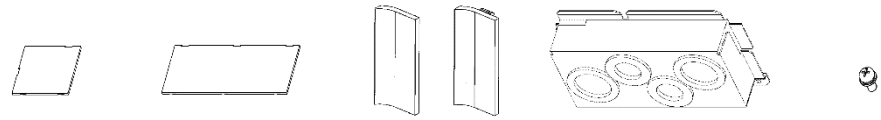 Closing plate (side face, small) x 3 Closing plate (side face, large) x 1 Closing plate (right corner) x 1 (left corner) x 1 Wiring cover x 1 Cross recessed head screw with captive washer x 2 (M5x10)

(3) Specifications

This kit can only be installed on standard specification 1 (basic type).

Applicable inverter

Table 11.14-2

Model	Inverter capacity
FRENIC-MEGA (G2)	FRN0003 to 0115G2S-2G / FRN0002 to 0060G2□-4G

Type and weight

Table 11.14-3

Item	Specification			
Type	P40ST-FA1	P40ST-FB1	P40ST-FC1	P40ST-FD1
Applicable inverter type	FRN0003G2S-2G FRN0005G2S-2G FRN0002G2S-4G FRN0003G2S-4G	FRN0008G2S-2G FRN0011G2S-2G FRN0018G2S-2G FRN0004G2S-4G FRN0006G2S-4G FRN0009G2S-4G	FRN0032G2S-2G FRN0046G2S-2G FRN0059G2S-2G FRN0018G2S-4G FRN0023G2S-4G FRN0035G2S-4G	FRN0075G2S-2G FRN0088G2S-2G FRN0115G2S-2G FRN0041G2S-4G FRN0045G2S-4G FRN0060G2S-4G
Weight [kg]	0.1	0.2	0.3	0.4

Changes to the specifications from standard specification 1 (basic type) when this compatibility attachment is installed are as follows. Other specifications are the same as the standard specification 1 (basic type).

Rated output current

The rated output current in the case of HND (High, Normal Duty applications) for three-phase 200V series low duty applications is shown in the following table.

Table 11.14-4

Item		Specification					
Applicable inverter type (FRN****G2S-2G)		0032	0046	0059	0075	0088	0115
Output ratings	Rated current [A]	29	42	55	68	80	107

Ambient temperature

-10 to +40 °C

Number of installable option cards (PCBs)

By installing this compatibility attachment, a single option card can be installed.

(Two OPC-RY relay output interface cards can be installed.)

All option cards are supported.

The connection port differs based on the specifications for each option.

(4) Setting change

Select IP40 with function code H98 (Protection/Maintenance function (Mode selection)) bit 7 (IP20/IP40 switching).

It is necessary to change to a level of protection appropriate for IP40 due to the protective coordination relationship.

11.15 External Frequency Command Potentiometer (External)

An external frequency command potentiometer may be used to set the drive frequency. Connect the potentiometer to control signal terminals [11] through [13] of the inverter as shown in Fig. 11.15-1.

■ **RJ-13 Type: RJ-13 (BA-2 B-characteristics, 1 kΩ)**

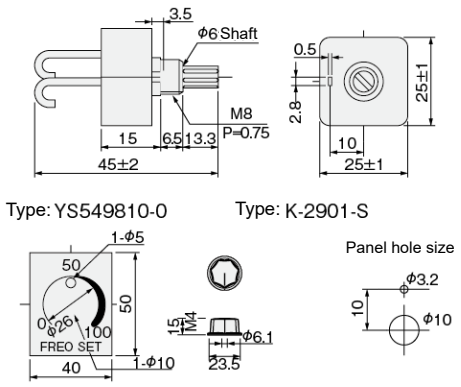

(Note) The nameplate and dial must be ordered separately (parts available from Fuji Electric Technica Co., Ltd.)

■ **WA3W-1kΩ Type: WA3W-1kΩ (3W B-characteristics)**

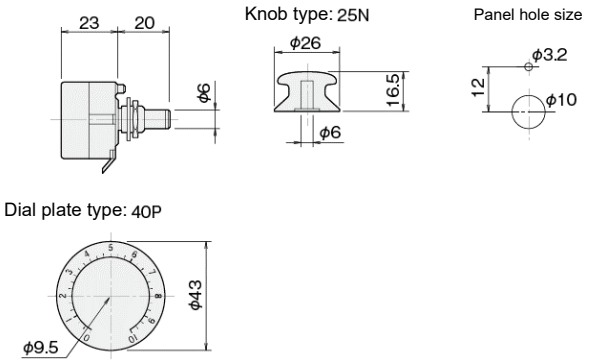

(Note) The nameplate and dial must be ordered separately (parts available from Fuji Electric Technica Co., Ltd.)

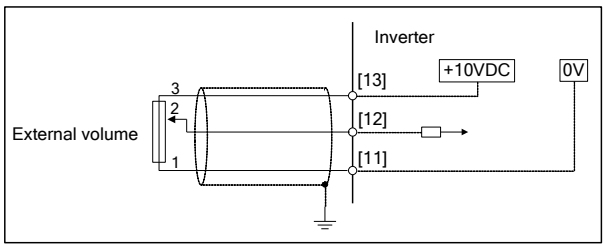

Fig. 11.15-1 External dimensions and connection example for external frequency command potentiometer

11.16 Extension Cable for Remote Operation

This cable is used to connect the inverter unit RJ-45 connector with the keypad or USB-RS-485 converter, etc. The cable is available in lengths of 1 m, 3 m, and 5 m. All cables are straight type.

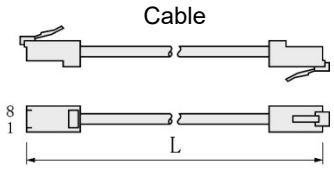

Table 11.16-1 Extension cable length for remote operation

Type	Length (m)
CB-5S	5
CB-3S	3
CB-1S	1

11.17 Selecting Measurement Options

11.17.1 Frequency meters

By connecting a frequency meter to inverter control circuit terminal [FM1], [FM2] and [11], output frequency can be measured. The type is the same as that of a standard meter, but a type with frequency scale is available for the inverter.

■ **TRM-45**
Type: TRM-45, 10 VDC 1 mA

This model has two types of calibration: “0 to 60/120 Hz” and “60/120/240 Hz.”

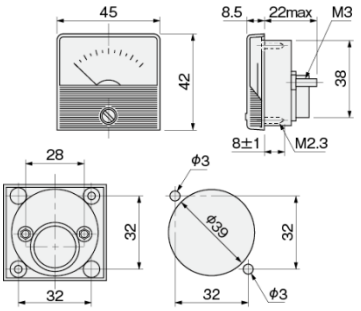

Parts available from Fuji Electric Technica Co., Ltd.

■ **FMN-60**
Type: FMN-60, 10 VDC 1 mA

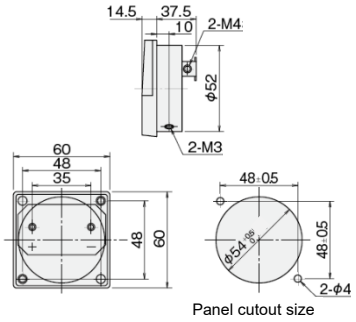

■ **FMN-80**
Type: FMN-80, 10 VDC 1 mA

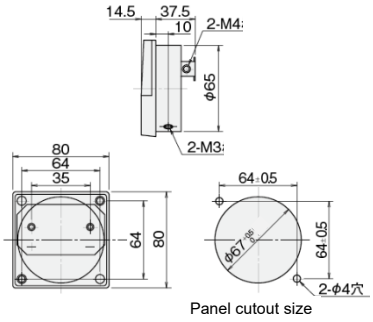

Parts available from Fuji Electric Technica Co., Ltd.

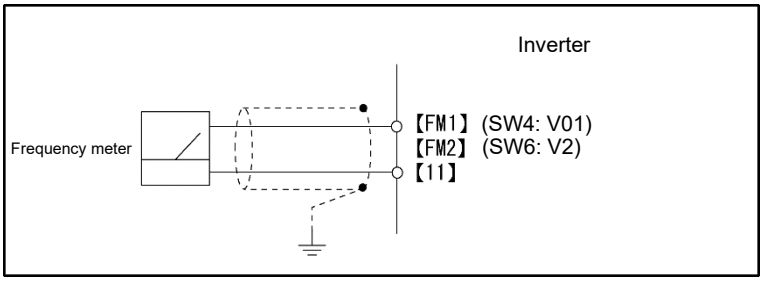

Fig. 11.17-1 Frequency meter external dimensions and connection example

11.18 Control Terminal Block (G1S Compatible) OPC-G1-TB1

The control terminal block for the conventional model MEGA (GS1) is available as an option to allow round crimp terminals to be connected.

Note When using this terminal block option, terminal [X6], [EN1], [EN2], and [FM2] functions cannot be used. If terminal [X6] was used with MEGA (G1), it will be necessary to reassign to other than terminal [X6].

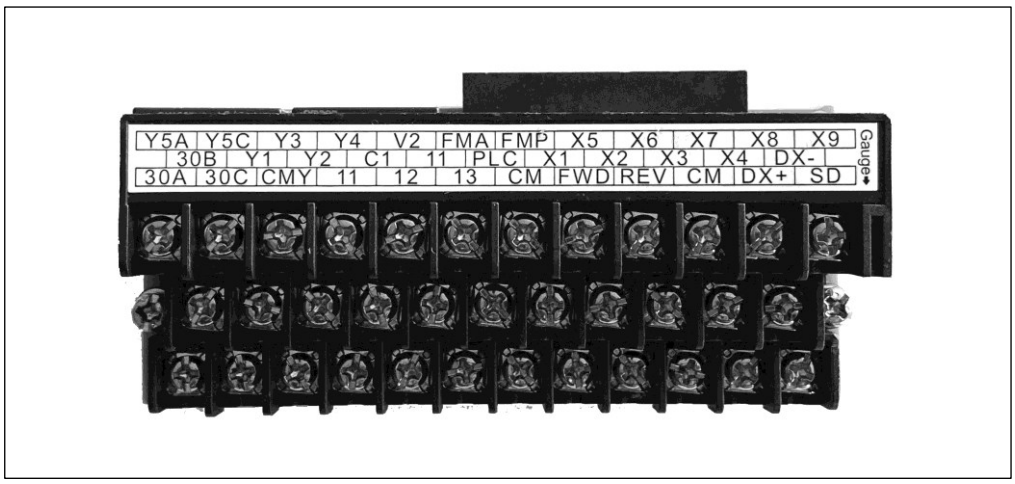

Table 11.18-1 Screw specification, tightening torque, and recommended wire size

Common terminal	Screw specification		Recommended wire size（mm^2）
	Screw size	Tightening torque（N· m）	
Control circuit terminal	M3	0.7	0.75
Fixing screws	M3	0.7	-

11.19 Built-in Option Card Types and Ports in Which They Can be Installed

The FRENIC-MEGA option card connection ports in which each built-in option card can be installed are shown in the following table.

Table 11.19-1

Class	Type	Option card connection port			Remarks
		A port	B port	C port	
Relay output	OPC-RY	Y	Y	N	Two cards can be installed simultaneously in the A and B ports (4 outputs).
	OPC-RY2 *3	N	Y	Y	One card can be installed using both ports B and C.
Feedback	OPC-PG	N	N	Y	
	OPC-PG2	N	N	Y	
	OPC-PG22	N	*1	Y	
	OPC-PMPG2	N	*1	Y	Dedicated MEGA part for driving synchronous motors
I/O system	OPC-DI	Y	Y	Y	A single card (A, B, or C) can be installed.
	OPC-DO	Y	Y	Y	A single card (A, B, or C) can be installed.
	OPC-AIO	Y	Y	Y	A single card (A, B, or C) can be installed.
	OPC-AO *3	Y	Y	Y	A single card (A, B, or C) can be installed.
	OPC-PT *3	Y	Y	Y	A single card (A, B, or C) can be installed.
Communication system	OPC-DEV	Y	Y	Y	Only one communication system option can be installed (example: OPC-DEV and OPC-TL cannot be used at the same time.)
	OPC-TL	Y	N	N	
	OPC-COP2	Y	N	N	
	OPC-PDP2	Y	N	N	
	OPC-CCL	Y	N	N	
	OPC-SX	Y	N	N	
	OPC-ETM *2	Y	N	N	

*1 The B/C port area is occupied, and therefore other options cannot be installed in the B port.

*2 Supported with ROM0300 or later.

*3 Supported with ROM0500 or later.

Note When using an IP40 compatibility attachment, only a single option card can be installed. (Two OPC-RY relay output interface cards can be installed.)

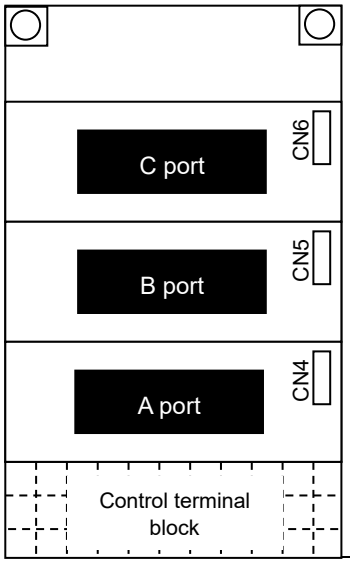

Fig. 11.19-1

11.19.1 T-Link Communication Card (OPC-TL)

The T-LINK communication card is used to connect the FRENIC-MEGA and Fuji programmable controller MICREX series by T-Link. Run commands and frequency commands can be set and monitored, and function code settings necessary for operation can be changed or checked from MICREX. The T-Link extension format can also be selected.

Applicable port

This communication card can only be installed in the A port of the three FRENIC-MEGA option connection ports (A, B, and C ports).

[Note] Other communication cards (DeviceNet communication card, SX-bus communication card, etc.) cannot be installed with this communication card installed. If multiple communication cards are installed, an Er4 trip will occur at FRENIC-MEGA, and it will not be possible to cancel the trip condition until there is only one communication card installed.

T-Link specifications

Table 11.19-2

Item	Specification
Applicable controller	MICREX series
Transmission requirements	T-Link slave I/O transmission
No. of occupied transmission words	Total of 8 words (MICREX → inverter: 4 words, inverter → MICREX: 4 words)
Number of connectable units	12,32 (at the T-Link extension format)
Recommended cable	FURUKAWA ELECTRIC CO., LTD. twisted pair cable CPEV-SBφ0.9 x 1 pair, or FURUKAWA ELECTRIC CO., LTD. twisted pair cable KPEV-SB0.5 mm^2 x 1 pair
Max. baud rate	500 kbps

For items not contained in the above table, T-Link specifications apply.

Station No. switch (RSW1, RSW2) settings

The T-Link station No. is set with the station No. switches (rotary switches RSW1 and RSW2). The station No. setting range is 00 to 99.

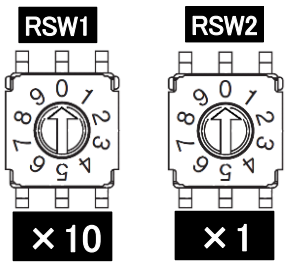

RSW1: Upper (x 10)
RSW2: Lower (x 1)

Fig. 11.19-2

* If using multiple inverters, ensure that addresses do not overlap.

* RSW1 is set to “0”, and RSW2 is set to “0” (station No. = 00) by factory default.

Dedicated T-Link interface function codes

Table 11.19-3

No.	Function code name	Setting range *1	Setting details
y96	G1, GX1 compatibility mode	0 to 3	0: Disable (factory default) 1: Reserved (cannot be set) 2: Enable (G1 compatible) 3: Enable (GX1 compatible)
y98	Run, frequency command source selection	0 to 3	Select from the following. y98 / Frequency command source / Run command source 0 / Inverter / Inverter 1 / T-link / Inverter 2 / Inverter / T-link 3 / T-link / T-link
o27	Operation selection when T-LINK communication error detected	0, 4 to 9	Immediate coast to stop & Ers trip
		1	Coast to stop and Ers trip after time set at o28 elapses
		2	Error ignored if communication link restored within time set at o28 Coast to stop and Ers trip if timeout occurs
		3,13 to 15	Communication error ignored and current situation maintained (Ers does not occur)
		10	Immediate forced deceleration Ers trip after stoppage
		11	Forced deceleration and Ers trip after stopping after time set at o28 elapses
		12	Error ignored if communication link restored within time set at o28 Ers trip after forced deceleration if timeout occurs
o28	Operation timer when T-link communication error detected	0.0 to 60.0 sec	Timer operating time when 1, 2, 11, or 12 set for o27
o30	T-LINK communication card communication format selection	0	G11 standard format
		2	G9 compatible format
		3	Extension format
		1, 4 to 255	Use prohibited

*1 Underlined values are factory default setting values.

Communication format

■ **G11 standard format data assignment address**

When the G11 standard format is selected (when o30 = 0), an 8 word area is used for each inverter in the input/output relay area as shown in the following diagram. The lower 4 words are for the read area, and the higher 4 words are for the write area.

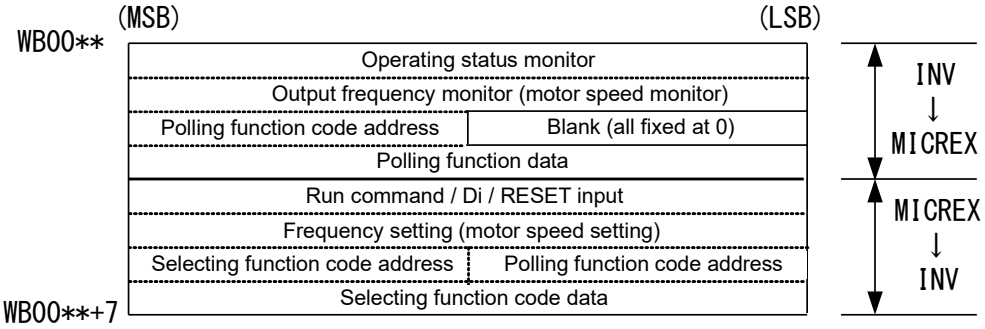

Note) ** is the T-link bus station No. set with “RSW1” and “RSW2”.

Fig. 11.19-3

■ **G9 compatible format data assignment address**

When the G9 compatible format is selected (when o30 = 2), an 8 word area is used for each inverter in the input/output relay area as shown in the following diagram. The lower 4 words are for the read area, and the higher 4 words are for the write area.

This is the format which requires the minimum of changes to the program at the controller side if switching from the FRENIC5000 G9 to FRENIC-MEGA.

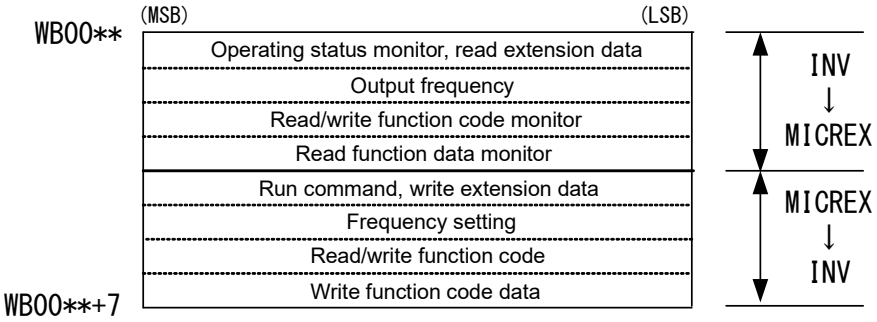

Note) ** is the T-link bus station No. set with “RSW1” and “RSW2”.

Fig. 11.19-4

■ **Extension format data assignment address**

When the extension format is selected (if o30 = 3), the lower 4 words are for the read area, and the higher 4 words are for the write area.

The desired function code can be selected with the function code type and number, and reading and writing are possible for all function codes accessible with communication.

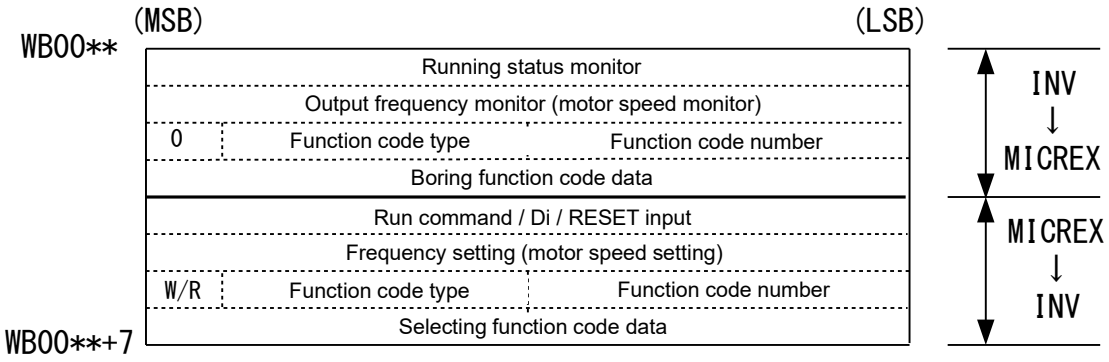

Note) ** is the T-link bus station No. set with “RSW1” and “RSW2”.

Fig. 11.19-5

11.19.2 SX-bus Communication Card (OPC-SX)

The SX-bus communication card is used to connect the FRENIC-MEGA and Fuji programmable controller MICREX-SX series by SX-bus. Automatic operation and monitoring can be performed, and function code settings necessary for operation can be changed or checked with MICREX-SX programs.

Applicable port

This communication card can only be installed in the A port of the three FRENIC-MEGA option card connection ports (A, B, and C ports).

[Note] This communication card uses certain B port functions, and therefore only a relay output card can be installed in the B port.

[Note] When this communication card is installed, it cannot be used in combination with other communication cards (DeviceNet communication card, PROFIBUS DP card, etc.) If these communication cards are mistakenly installed at the same time, communication error alarm Er4 will occur.

Hardware specifications

Table 11.19-4

Item	Specification
Name	SX-bus communication card
Transmission requirements	SX-bus slave, I/O transmission
Baud rate	25 Mbps
No. of occupied transmission words	Standard format (16 words: 8 words + 8 words)
Terminal/bus cable	Dedicated IN, OUT/SX bus cable * NP1C-P3 (0.3 m) to NP1C-25 (25 m)
Station No. switch RSW1, RSW2 (rotary switches)	The desired station No. can be assigned from 1 to 238 for the station No. (address) setting.
Status indicator LED (RUN, ERR)	The local station (running, error) is indicated with an LED.

Dedicated SX-bus communication card function codes

Table 11.19-5

No.	Function code name	Setting range *1	Setting
y96	G1, GX1 compatibility mode	0 to 3	0: Disable (factory default) 1: Reserved (cannot be set) 2: Enable (G1 compatible) 3: Enable (GX1 compatible)
y98	Run, frequency command source selection	0 to 3	Select from the following. y98 / Frequency command source / Run command source 0 / Inverter / Inverter 1 / SX-bus / Inverter 2 / Inverter / SX-bus 3 / SX-bus / SX-bus
o27	Operation selection when SX-bus communication error detected	0, 4 to 9	Immediate coast to stop & Er5 trip
		1	Coast to stop and Er5 trip after time set at o28 elapses
		2	Error ignored if communication link restored within time set at o28 Coast to stop and Er5 trip if timeout occurs
		3, 13 to 15	Communication error ignored and current situation maintained (Er5 does not occur)
		10	Immediate forced deceleration Er5 trip after stoppage
		11	Forced deceleration and Er5 trip after stoppage after time set at o28 elapses
		12	Error ignored if communication link restored within time set at o28 Er5 trip after forced deceleration if timeout occurs
o28	Operation timer when SX-bus communication error detected	0.0 to 60.0 sec	Timer operating time when 1, 2, 11, or 12 set for o27
o30	Communication format selection for SX-bus communication card	0	Standard format
		1 to 255	Use prohibited

*1 Underlined values are factory default setting values.

Usage area and data assignment addresses

■ **Standard format**

When the standard format is selected (when o30＝), a 16 word area is used for each inverter in the MICREX-SX I/Q area as shown in the following diagram. (Up to 10 units can be connected.) The lower 8 words are for the read area, and the higher 8 words are for the write area.

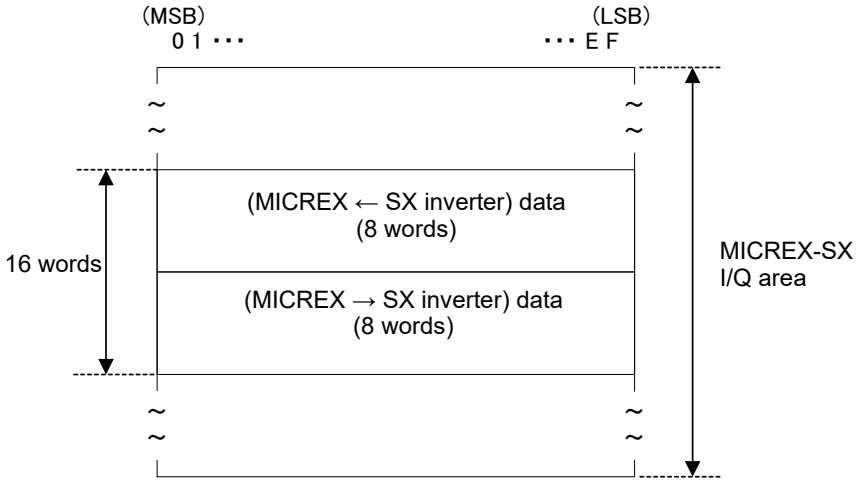

Fig. 11.19-6

	(MSB) 0 1 ･･･	7 8	(LSB) ･･･ E F	
%IW****. 0	Polling function code type (1)	Polling function code No. (1)		INV ↓ MICREX
%IW****. 1	Polling function code type (2)	Polling function code No. (2)		
%IW****. 2	Polling function code (1) data			
%IW****. 3	Polling function code (2) data			
%IW****. 4	Blank (fixed at 0)			
%IW****. 5	Blank (fixed at 0)			
%IW****. 6	Output frequency monitor (motor speed monitor)			
%IW****. 7	Operating status monitor			
%QW****. 8	Selecting function code type (1)	Selecting function code No. (1)		MICREX ↓ INV
%QW****. 9	Selecting function code type (2)	Selecting function code No. (1)		
%QW****. A	Selecting function code (1) data			
%QW****. B	Selecting function code (2) data			
%QW****. C	Frequency command			
%QW****. D	Run operation command			
%QW****. E	Polling function code type (1)	Polling function code No. (1)		
%QW****. F	Polling function code type (2)	Polling function code No. (2)		

Note) **** is the SX-bus station No. set at “RSW1” and “RSW2”.

Fig. 11.19-7

11.19.3 PROFIBUS-DP Communication Card (OPC-PDP2)

By installing the PROFIBUS-DP communication card in FRENIC-MEGA and connecting to the PROFIBUS-DP master device, run commands, frequency commands, and the operating status can be monitored, and all FRENIC-MEGA function codes can be changed or referenced.

The features of this communication card are shown below.

- PROFIBUS version: DP-V0 compatible
- Baud rate: 9,600 bps to 12 Mbps
- Compatible profile: PROFIDrive V2
- Reading/writing to all FRENIC-MEGA function codes possible

Applicable port

This communication card can only be installed in the A port of the three FRENIC-MEGA option connection ports (A, B, and C ports).

[Note] Other communication cards (DeviceNet communication card, SX-bus communication card, etc.) cannot be installed with this communication card installed. If multiple communication cards are installed, an Er4 trip will occur at FRENIC-MEGA, and it will not be possible to cancel the trip condition until there is only one communication card installed.

PROFIBUS-DP specifications

Table 11.19-6

Item		Specification	Remarks
Transmission	Line	RS-485 (insulated)	
	Connection length	See table below.	
	Baud rate	9.6, 19.2, 45.45, 93.75, 187.5, 500 kbit/s 1.5, 3, 6, 12 Mbit/s (automatic detection)	Selected at master side
	Transmission protocol	PROFIBUS-DP (DP-V0)	IEC 61158, 61784
Connector		6-pole terminal block	PHOENIX CONTACT
Control	Controller	SPC3 (Siemens)	
	Transmission buffer	1472 bytes (SPC3 built-in memory)	
Address		Setting with rotary switch (0 to 99) or setting with inverter function code o31 (0 to 125)	o31 is valid when the rotary switch is set to 0.
Diagnostic function		Disconnection detection	Based on OFFL LED
		Configuration error detection	Based on ERR LED

The maximum transmission distance per segment when using a PROFIBUS-DP cable is as follows.

Table 11.19-7

Communication speed (bit/s)	Max. length per segment (m)
9.6k	1200
19.2k	1200
45.45k	1200
93.75k	1000
187.5k	1000
500k	400
1.5M	200
3M	100
6M	100
12M	100

Function code settings

To specify run commands and frequency commands from PROFIBUS, it is necessary to set inverter function codes. A list is shown in Table 11.19-8.

Table 11.19-8 Function code settings required to enable run and frequency commands from PROFIBUS

<table>
<tr><th>Function code</th><th>Description</th><th>Factory default</th><th>Setting change value</th><th>Remarks</th></tr>
<tr><td>y96</td><td>G1, GX1 compatibility mode</td><td>0</td><td>0/2/3</td><td>0: Disable (factory default)
1: Reserved (cannot be set)
2: Enable (G1 compatible)
3: Enable (GX1 compatible)</td></tr>
<tr><td>y98</td><td>Run, frequency commands from PROFIBUS</td><td>0</td><td>3</td><td>Select from the following.
<table>
<tr><th>y98</th><th>Frequency command source</th><th>Run command source</th></tr>
<tr><td>0</td><td>Inverter</td><td>Inverter</td></tr>
<tr><td>1</td><td>PROFIBUS</td><td>Inverter</td></tr>
<tr><td>2</td><td>Inverter</td><td>PROFIBUS</td></tr>
<tr><td>3</td><td>PROFIBUS</td><td>PROFIBUS</td></tr>
</table></td></tr>
<tr><td>y99</td><td>Run, frequency command from rotor</td><td>0</td><td>0</td><td>Unnecessary to change from factory default</td></tr>
<tr><td>From E01</td><td>Terminal [X□] function selection
(□: terminal number)</td><td>-</td><td>Set to other than 24, 1024 (other than “LE” selection).
(Applies to all terminal X function codes.)</td><td>Even when “LE” is selected, the y98 setting will be valid if the terminal is turned ON.
When “LE” is set to OFF, the y98 setting will be invalid, and both run and frequency commands will be specified from the inverter.</td></tr>
</table>

Other related function codes are shown in the following table.

Table 11.19-9 Related inverter function codes

Function code	Description	Factory default	Setting range	Remarks
o27	Operation selection when PROFIBUS communication error detected	0	0 to 15	
o28	Operation timer when PROFIBUS communication error detected	0.0s	0.0s to 60.0s	
o30	PPO TYPE	0	0 to 255	Refer to the communication card instruction manual.
o31	PROFIBUS station No. selection	0	0 to 125	Station Nos. that are valid when the rotary switch on the PCB is set to “00”
o40 to o47	Write function code assignment 1 to 8	0000	0x0000 to 0xFFFF	Sets function code for data mapped I/O writing. Same as PNU915
o48 to o55	Read function code assignment 1 to 8	0000	0x0000 to 0xFFFF	Sets function code for data mapped I/O reading. Same as PNU916

Node address

(1) Setting with rotary switches (SW1, SW2)

The node address must be set before turning ON the PROFIBUS-DP communication card power. The node address is set using the rotary switches (SW1, SW2) on the communication card, and can be set from 1 to 99 in decimal notation. SW1 is used to set the 10 digit, and SW2 is used to set the 1 digit.

Address = (SW1 setting value x 10) + (SW2 setting value x 1)

[Note] It is necessary to turn the power OFF and ON again after changing the node address.
[Note] If wishing to set an address greater than 99, the “(2) Setting with o31” procedure is required.

(2) Setting with o31

By setting the rotary switch on the communication card to “00” and turning the power OFF and ON again, the code set with o31 will be valid. If the rotary switch is set to other than “00”, the rotary switch value will be valid.

The setting range is 0 to 125. If a value of 126 or higher is set, the ERR LED on the communication card will blink, notifying the user that there is a problem with the setting.

PPO type selection

This communication card supports PPO types 1 to 4 (refer to the FRENIC-MEGA PROFIBUS-DP Communication Card Instruction Manual for details on PPO).

Set the same PPO type at the keypad and in the master settings. If the settings are not the same, data exchange between the communication card and master will not start. If the settings do not match, the ERR LED on the communication card will blink, notifying the user that there is a problem with the setting.

■ Setting from the keypad

Inverter function code o codes are used to specify PROFIBUS-DP interface settings. o codes can be accessed from the inverter keypad after installing this communication card.

PPO type selection uses o30. After changing this parameter, it is necessary to turn the inverter power OFF and ON again to enable the change.

Table 11.19-10

o30	PPO type selection
0, 1, 6 to 255	PPO 1
2	PPO 2
3	PPO 3
4	PPO 4
5	PPO 5

■ Setting from master

The module definition is sent with the PROFIBUS-DP Master setting frame. This definition can be found in the GSD file. For details on the PROFIBUS-DP setting method, refer to the “Master Manual”.

11.19.4 CANopen Communication Card (OPC-COP2)

By installing the CANopen communication card in FRENIC-MEGA and connecting to CANopen, run commands and frequency commands can be set, and all FRENIC-MEGA function codes can be accessed from the CANopen master (PC, PLC, etc.). FRENIC-MEGA can be controlled as a slave.

Applicable port

This communication card can only be installed in the A port of the three FRENIC-MEGA option connection ports (A, B, and C ports).

[Note] Other communication cards (DeviceNet communication card, SX-bus communication card, etc.) cannot be installed with this communication card installed. If multiple communication cards are installed, an Er4 trip will occur at FRENIC-MEGA, and it will not be possible to cancel the trip condition until there is only one communication card installed.

CANopen specifications

Table 11.19-11

Item	Specification	Remarks
Physical layer	CAN (ISO11898)	
Baud rate	20 k, 50 k, 125 k, 250 k, 500 k, 800 k, 1 Mbit/s	Set with o32
Maximum cable length	2500 m (when 20 kbits/s) to 25 m (when 1 Mbit/s)	
Node ID	1 to 127	Set with o31
Profile	Conforms to the following profiles. - CiA DS-301 Ver.4.02 - CiA DS-402 Ver.2.0, Velocity mode	

Function code settings

Function codes necessary for CANopen communication

The function codes which must be set to communicate between this communication card and the CANopen master are shown in the following table.

Table 11.19-12

Function code	Function code name	Factory default	Data setting range	Description
o31 *1	Node ID setting	0	0 to 255 (Valid range: 0 to 127)	By setting 0 or 128 or higher, data is recognized as 127.
o32 *1	Baud rate setting	0	0 to 255 (Valid range: 0 to 7)	0: 125 kbits/s 1: 20 kbits/s 2: 50 kbits/s 3: 125 kbits/s 4: 250 kbits/s 5: 500 kbits/s 6: 800 kbits/s 7: 1 Mbit/s 8 to 255: 1 Mbit/s

*1 To reflect settings after setting o31 and o32, either turn the inverter unit power OFF and ON again, or send a ResetNode command from the CANopen master.

Other related function codes

Other related function codes that can be set with CANopen communication are shown in the following table.

Table 11.19-13

Function code	Function code name	Factory default	Data setting range	Description
o27	Operation when CANopen communication error detected	0	0 to 15	
o28	Timer when CANopen communication error detected	0	0 to 60.0 s	
o40 to o43 *2	Applicable function code setting written via RPDO No.3	0x0000	0x0000 to 0xFFFF	Set the function code as follows: 0xXX■■ XX: Group (see table below) ■■: Number Example) F07 → 0x0407
o48 to o51 *2	Applicable function code setting monitored via TPDO No.3	0x0000	0x0000 to 0xFFFF	As above
y96	G1, GX1 compatibility mode	0	0/2/3	0: Disable (factory default) 1: Reserved (cannot be set) 2: Enable (G1 compatible) 3: Enable (GX1 compatible)
y98	Run, frequency command source selection	0	0 to 3	Select from the following. Table 11.19-14

y98	Frequency command source	Run command source
0	Inverter	Inverter
1	CANopen	Inverter
2	Inverter	CANopen
3	CANopen	CANopen

*2 To reflect settings after setting o40 to o43 and o48 to o51, either turn the inverter unit power OFF and ON again, or send a ResetNode command from the CANopen master.

Table 11.19-15 Function code types (function codes o40 o43 and o48 o51)

Type	Type code		Name	Type	Type code		Name	Type	Type code		Name
S	2	02h	Command, function data	W	16	10h	Monitor data 2	T	30	1Eh	Scheduled operation
M	3	03h	Monitor data	X	17	11h	Alarm data	E1	31	1Fh	Terminal function
F	4	04h	Basic function	z	18	12h	Alarm data 2	H1	32	20h	High performance function
E	5	05h	Terminal function	b	19	13h	Motor 3/speed control 3 parameter	o1	33	21h	Option function
C	6	06h	Control function	d	20	14h	Application function 2	U1	34	22h	Customizable logic function
P	7	07h	Motor 1 parameter		-			M1	35	23h	Monitor data
H	8	08h	High performance function		-			J1	36	24h	Application function
A	9	09h	Motor 2/speed control 2 parameter	W1	23	17h	Monitor data 2	J2	37	25h	Application function
o	10	0Ah	Option function	W2	24	18h	Monitor data 2	J3	38	26h	Application function
L	11	0Bh	Special function	W3	25	19h	Monitor data 2	J4	39	27h	Application function
r	12	0Ch	Motor 4/speed control 4 parameter	X1	26	1Ah	Alarm data	J5	40	28h	Application function
U	13	0Dh	Customizable logic function	X2	27	1Bh	Alarm data	J6	41	29h	Application function
J	14	0Eh	Application function	Z1	28	1Ch	Alarm data 2	d1	42	2Ah	Application function 2
y	15	0Fh	Link function	K	29	1Dh	Keypad related functions	d2	55	37h	Application function 2

Communication

This communication card is a CANopen slave, and supports the services shown in the following table.

Table 11.19-16

Item	Service	Remarks
PDO	RPDO x 3, TPDO x 3 TPDO supports Sync, Cyclic, and Async.	PDO variable mapping can be changed.
SDO	Expedited and Segmented protocol is supported. Only Default SDO is supported.	Block protocol is not supported.
Emergency (EMCY) Object	EMCY Producer	EMCY Consumer is not supported.
Network Management (NMT)	NMT Slave (DS-301 state machine) Guarding Heartbeat Producer Heartbeat Consumer Boot-up Protocol	NMT master is not supported.

11.19.5 DeviceNet Communication Card (OPC-DEV)

By installing the DeviceNet communication card in the FRENIC-MEGA and connecting to DeviceNet, run commands and frequency commands can be set and monitored, and function code settings necessary for operation can be changed or checked from the DeviceNet master.

Applicable ports

This communication card can be installed in one of the three FRENIC-MEGA option connection ports (A, B, and C ports).

[Note] Other communication cards (CC-Link communication card, SX-bus communication card, etc.) cannot be installed with this communication card installed. If multiple communication cards are installed, an Er4 trip will occur at FRENIC-MEGA, and it will not be possible to cancel the trip condition until there is only one communication card installed.

DeviceNet specifications

Table 11.19-17

Item	Specification			
Number of nodes connectable	Max. 64 (including the master)			
MAC ID	0 to 63			
Insulation	500 VDC (photocoupler insulation)			
Transmission speed	500, 250, 125 kbit/s			
Max. cable length (when using thick cables)	Baud rate	500 kbits/s	250 kbits/s	125 kbits/s
	Trunk line length	100 m	250 m	500 m
	Branch line length	6 m	6 m	6 m
	Total branch line length	39 m	78 m	156 m
Messages supported	1. I/O messages (Poll, Change of State) 2. Explicit messages			
Vendor ID	319 (Registered name: Fuji Electric Group)			
Device type	AC drive (code: 2)			
Product code	9221			
Applicable device profile	AC Drive			
Number of input/output bytes	Max. 8 bytes for each of input and output. * Based on selected format See “Communication format” (Table 11.19-20).			
Applicable DeviceNet specifications	CIP specifications Volume1 2.2 edition Japanese version and Volume3 1.1 edition Japanese version			
Node type	Group 2 only server (noncompliant with UCMM)			
Network power consumption	80 mA, 24 VDC [Note] The network power is supplied by an external power source.			

For items not contained in the above table, the DeviceNet specifications apply.

DIP switch settings

The node address and data rate are set with DIP switches. (See figure below.) The node address setting range is 0 to 63, and the data rate setting range is 125/250/500 kbit/s. Select the appropriate ranges with the DIP switches before turning ON the communication card power. Even if switches are set while the power is ON, please be aware that they will not be reflected until the power has been turned OFF and ON again.

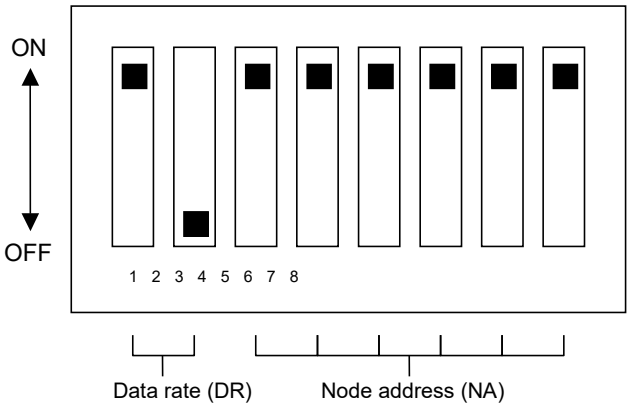

DR (bit/s)	DIP 1-2
125 K	00
250 K	01
500 K	10
Prohibited	11

NA	DIP 3-8
0	000000
1	000001
2	000010
3	000011
...	...
62	111110
63	111111

Fig. 11.19-8 DIP switch details (in the diagram, the node address is 63, and the data rate is 500 kbit/s)

Function code settings

Table 11.19-18

<table>
<tr><th>Function code</th><th>Description</th><th>Factory default</th><th>Setting</th><th>Remarks</th></tr>
<tr><td>y96</td><td>G1, GX1 compatibility mode</td><td>0</td><td>0: Disable (factory default)
1: Reserved (cannot be set)
2: Enable (G1 compatible)
3: Enable (GX1 compatible)</td><td></td></tr>
<tr><td>y98</td><td>Run, frequency command source selection</td><td>0</td><td>Select from the following.
<table>
<tr><th>y98</th><th>Frequency command source</th><th>Run command source</th></tr>
<tr><td>0</td><td>Inverter</td><td>Inverter</td></tr>
<tr><td>1</td><td>DeviceNet</td><td>Inverter</td></tr>
<tr><td>2</td><td>Inverter</td><td>DeviceNet</td></tr>
<tr><td>3</td><td>DeviceNet</td><td>DeviceNet</td></tr>
</table></td><td></td></tr>
<tr><td>o27</td><td>Operation selection when DeviceNet communication error detected</td><td>0</td><td>Refer to the communication card instruction manual.</td><td></td></tr>
<tr><td>o28</td><td>Operation timer when DeviceNet communication error detected</td><td>0.0s</td><td>0.0 s to 60.0 s</td><td></td></tr>
<tr><td>o31</td><td>Output instance selection</td><td>0</td><td>See Table 11.19-20</td><td rowspan="4">After setting, it is necessary to turn the power OFF and ON again to reflect operation to the inverter.</td></tr>
<tr><td>o32</td><td>Input instance selection</td><td>0</td><td>See Table 11.19-20</td></tr>
<tr><td>o40 to 43</td><td>Write function code assignment 1 to 4</td><td>0000</td><td>See supplementary information below.</td></tr>
<tr><td>o48 to 51</td><td>Read function code assignment 1 to 4</td><td>0000</td><td>See supplementary information below.</td></tr>
</table>

[Supplementary information] Inverter function code o40 to o43 and o48 to o51 setting method
Specify the function code type (Table11.19-19) and number with a 4 digit hexadecimal number as shown below.

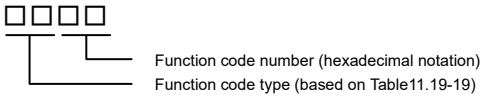

Fig. 11.19-9

Table11.19-19 Function code types

Type	Type code		Name	Type	Type code		Name	Type	Type code		Name
S	2	02h	Command, function data	W	16	10h	Monitor data 2	T	30	1Eh	Scheduled operation
M	3	03h	Monitor data	X	17	11h	Alarm data	E1	31	1Fh	Terminal function
F	4	04h	Basic function	z	18	12h	Alarm data 2	H1	32	20h	High performance function
E	5	05h	Terminal function	b	19	13h	Motor 3/speed control 3 parameter	o1	33	21h	Option function
C	6	06h	Control function	d	20	14h	Application function 2	U1	34	22h	Customizable logic function
P	7	07h	Motor 1 parameter		-			M1	35	23h	Monitor data
H	8	08h	High performance function		-			J1	36	24h	Application function
A	9	09h	Motor 2/speed control 2 parameter	W1	23	17h	Monitor data 2	J2	37	25h	Application function
o	10	0Ah	Option function	W2	24	18h	Monitor data 2	J3	38	26h	Application function
L	11	0Bh	Special function	W3	25	19h	Monitor data 2	J4	39	27h	Application function
r	12	0Ch	Motor 4/speed control 4 parameter	X1	26	1Ah	Alarm data	J5	40	28h	Application function
U	13	0Dh	Customizable logic function	X2	27	1Bh	Alarm data	J6	41	29h	Application function
J	14	0Eh	Application function	Z1	28	1Ch	Alarm data 2	d1	42	2Ah	Application function 2
y	15	0Fh	Link function	K	29	1Dh	Keypad related functions	d2	55	37h	Application function 2

Example: In the case of F26 F ⇒ type code 04
26 ⇒ 1A(hexadecimal notation) } "041A"

Communication formats

Supported communication formats are shown in the following table. Select o31 for output, and o32 for input. Please be aware that changes to the o31 and o32 settings are not reflected until the inverter power is turned OFF and ON again.

Table 11.19-20 Format list

o31, o32	Type	Instance ID	Content	Occupied words
o31 = 20	Output (master → inverter)	20	Basic I/O instance output	2
o31 = 21 or 0 (initial value)		21	Extension I/O instance output	2
o31 = 100		100	Fuji Electric original output	2
o31 = 102		102	Data mapped I/O (write)	4
o31 = 104 *		104	Function code access request	4
o32 = 70	Input (inverter → master)	70	Basic I/O instance input	2
o32 = 71 or 0 (initial value)		71	Extension I/O instance input	2
o32 = 101		101	Fuji Electric original input	2
o32 = 103		103	Data mapped I/O (monitor)	4
o32 = 105 *		105	Function code access response	4

* When selecting function code access request (o31 = 104) for the output format, select the function code access response (o32 = 105) for the input format. Refer to the DeviceNet Communication Card Instruction Manual for details.

11.19.6 CC-Link Communication Card (OPC-CCL)

CC-Link (Control & Communication Link) is an FA open field network system.

Installing the CC-Link communication in the FRENIC-MEGA and connecting to the CC-Link master unit with a dedicated cable supports a transmission speed of 156 kbps to 10 Mbps and total length of 100 to 1,200 m, allowing it to be used in a wide range of systems requiring high-speed or long-distance transmission, enabling a flexible system configuration.

Applicable port

This communication card can only be installed in the A port of the three FRENIC-MEGA option connection ports (A, B, and C ports).

[Note] Other communication cards (DeviceNet communication card, SX-bus communication card, etc.) cannot be installed with this communication card installed. If multiple communication cards are installed, an Er4 trip will occur at FRENIC-MEGA, and it will not be possible to cancel the trip condition until there is only one communication card installed.

CC-Link specifications

Table 11.19-21

Item	Specification				
Applicable controller	Mitsubishi Electric PLC, etc. (CC-Link master)				
Transmission system	CC-Link version 1.10 and 2.0 (Broadcast polling system)				
Number of connected inverters	Max. 42 units (one station occupied/unit)				
Number of stations occupied	CC-Link version 1.10: 1 station occupied CC-Link version 2.0: 1 station occupied (Selectable from among 2x, 4x and 8x settings)				
Baud rate	10 Mbps/5 Mbps/2.5 Mbps/625 Kbps/156 Kbps				
Total max. cable length (when using dedicated CC-Link cable)	10 Mbps	5M bps	2.5M bps	625 kbps	156 kbps
	100 m	150 m	200 m	600 m	1200 m
Insulation	500 VDC (photocoupler insulation)				
Station type	Remote device station				
Remote device type	Inverter (0x20)				

For items not contained in the above table, the CC-Link specifications apply.

Dedicated CC-Link function codes

Table 11.19-22

No.	Function code name	Setting range *1	Setting
y96	G1, GX1 compatibility mode	0/2/3	0: Disable (factory default) 1: Reserved (cannot be set) 2: Enable (G1 compatible) 3: Enable (GX1 compatible)
y98	Run, frequency command source selection	0 to 3	Select from the following. 0: Inverter / Inverter 1: CC-Link / Inverter 2: Inverter / CC-Link 3: CC-Link / CC-Link
o27	Operation selection when CC-Link communication error detected	0, 4 to 9	Immediate coast to stop & Err5 trip
		1	Coast to stop and Err5 after time set at o28 elapses
		2	Error ignored if communication link restored within time set at o28 Coast to stop and Err5 if timeout occurs
		3,13 to 15	Communication error ignored and current situation maintained (Err5 does not occur)
		10	Immediate forced deceleration Err5 after stoppage
		11	Forced deceleration and Err5 trip after stoppage after time set at o28 elapses
		12	Error ignored if communication link restored within time set at o28 Err5 after forced deceleration if timeout occurs
o28	Timer time setting when communication error detected	0.0 to 60.0 sec	Timer operating time when 1, 2, 11, or 12 set for o27
o30	CC-Link extension setting (multiple setting)	5 to 255	Disable
		0, 1	1 station occupied (CC-Link version 1.10)
		2	1 station occupied, 2x setting (CC-Link Ver.2.00)
		3	1 station occupied, 4x setting (CC-Link Ver.2.00)
		4	1 station occupied, 8x setting (CC-Link Ver.2.00)
o31	Station No. setting *2	0, 1 to 64	Station No. setting (slave: 1 to 64) L.ERR lights up if other value set.
o32	Baud rate setting *2	0 to 4	0: 156kbps, 1: 625kbps, 2: 2.5Mbps, 3: 5Mbps, 4: 10 Mbps L.ERR lights up if other value set.

*1 Underlined values are factory default setting values.

*2 By changing the station No. or baud rate settings while the inverter power is ON, L.ERR blinks, and communication is stopped. Setting values are reflected by resetting “RST” from the terminal block, or the next time the power is turned ON.

11.19.7 Multiprotocol Ethernet® Communication Card (OPC-ETM)

By installing the multiprotocol Ethernet communication card on FRENIC-MEGA (G2) (ROM version 0300 and later), and setting and monitoring run commands and frequency from a master device connected by Ethernet, function code settings required for operation can be changed and checked. Furthermore, data can be exchanged with peripheral equipment.

Applicable port

This communication card can only be installed in the A port of the three FRENIC-MEGA option connection ports (A, B, and C ports).

[Note] Other communication cards (DeviceNet communication card, SX-bus communication card, etc.) cannot be installed with this communication card installed. If multiple communication cards are installed, an Er4 trip will occur at FRENIC-MEGA, and it will not be possible to cancel the trip condition until there is only one communication card installed.

Specification

Item	Specification	Remarks
Supported protocols	• EtherNet/IP server • PROFINET-RT device • Modbus TCP server *1	
Connector type	With RJ-45 shield, CAT5e or higher UTP or STP cable	
Physical layer type	IEEE 802.3	
Number of ports	2 ports (built-in switch function)	
Transmission speed	10 Mbps / 100 Mbps (automatically detected)	
Duplex mode	Half duplex/full duplex (automatically detected)	
Auto MDI-X	Enabled (auto straight/crossover cable recognition)	
Auto Polarity	Enabled (auto polarity detection)	
Cable length	Max. 100 m (328 ft) per segment	

*1 Supported with Inverter ROM0700 and Option ROM0300 or later.

Function code settings

Table 11.19-23

Function code	Description	Factory default	Setting
y95	Run operation command clear selection when communication error occurs	0	0: Do not clear data when a communication error alarm occurs. 1: Clear data for function codes S01/S05/S19 when a communications error occurs. 2: Clear the run command assigned bit of function code S06 when a communications error occurs. 3: Clear operations in 1 and 2 above are performed. 4: Clear data for 3 above and for function codes S02/S03/S13/S15/S20/S21. * The applicable alarms are Er8, ErP, Er4, and Er5.
y97	Communication data storage method selection	0	Set to “1” if frequently rewriting inverter function codes other than run command related S codes (Sxx). If the same value is written, the value is not written, and the number of times is not counted. 0: Store in nonvolatile memory (Rewritable times are limited) 1: Write in temporary memory (Rewritable times are unlimited) 2: Save all data from temporary memory to nonvolatile memory (After all save, return to Data 1)

<table>
<tr><th>Function code</th><th>Description</th><th>Factory default</th><th>Setting</th></tr>
<tr><td>y98</td><td>Run, frequency command source selection</td><td>0</td><td>Select from the following.
<table>
<tr><th>y98</th><th>Frequency command source</th><th>Run command source</th></tr>
<tr><td>0</td><td>Inverter</td><td>Inverter</td></tr>
<tr><td>1</td><td>Ethernet</td><td>Inverter</td></tr>
<tr><td>2</td><td>Inverter</td><td>Ethernet</td></tr>
<tr><td>3</td><td>Ethernet</td><td>Ethernet</td></tr>
</table></td></tr>
<tr><td>o27</td><td>Transmission error (Operation selection)</td><td>0</td><td>0: Immediate Err5 trip when communication error occurs.
1: Immediate Err5 trip after running for time specified with timer after communication error occurs.
2: Immediate Err5 trip if communication error occurs, and communication does not recover after retry while running for time specified with timer
3: Motor continues to run without Err5 trip even if communication error occurs. Motor runs in accordance with communication command after communication recovers.
4 to 9: Same as o27 = 0
10: Err5 trip following deceleration stop due to communication error.
11: Err5 trip following deceleration stop after running for time specified with timer after communication error occurs
12: Deceleration stop if communication error occurs, and communication does not recover after retry while running for time specified with timer. Motor continues to run in accordance with communication command if communication recovers.
13 to 15: Same as o27 = 3</td></tr>
<tr><td>o28</td><td>Transmission error (Timer time)</td><td>0.0</td><td>0.0～60.0s</td></tr>
<tr><td>o201</td><td>IP address setting 1</td><td>0</td><td rowspan="4">Example: Set as follows if 192.168.11.1 is set.
o201 = 192
o202 = 168
o203 = 11
o204 = 1 (if o213 = 1, the rotary switch setting is referenced)</td></tr>
<tr><td>o202</td><td>IP address setting 2</td><td>0</td></tr>
<tr><td>o203</td><td>IP address setting 3</td><td>0</td></tr>
<tr><td>o204</td><td>IP address setting 4</td><td>0</td></tr>
<tr><td>o205</td><td>Subnet mask setting 1</td><td>255</td><td rowspan="4">Example: Set as follows if 255.255.255.0 is set.
o205 = 255
o206 = 255
o207 = 255
o208 = 0</td></tr>
<tr><td>o206</td><td>Subnet mask setting 2</td><td>255</td></tr>
<tr><td>o207</td><td>Subnet mask setting 3</td><td>255</td></tr>
<tr><td>o208</td><td>Subnet mask setting 4</td><td>0</td></tr>
<tr><td>o209</td><td>Default gateway setting 1</td><td>0</td><td rowspan="4">Example: Set as follows if 192.168.11.1 is set.
o209 = 192
o210 = 168
o211 = 11
o212 = 1</td></tr>
<tr><td>o210</td><td>Default gateway setting 2</td><td>0</td></tr>
<tr><td>o211</td><td>Default gateway setting 3</td><td>0</td></tr>
<tr><td>o212</td><td>Default gateway setting 4</td><td>0</td></tr>
<tr><td>o213</td><td>IP address setting mode</td><td>0</td><td>0: Fixed
1: Hard switch
2: DHCP (other than PROFINE)
3: DCP (for PROFINET)

If 0, set o201 to o204.
If 1, set IP address
as o201.o202.o203.n.
(n is determined by Hard switch.)</td></tr>
<tr><td>o214</td><td>Protocol setting</td><td>0</td><td>0: None (invalid)
1: PROFINET-RT
2: EtherNet/IP
3: Modbus TCP (*1 Supported with ROM0700 or later)</td></tr>
<tr><td>o215</td><td>KEEP-ALIVE startup time</td><td>60</td><td>10 to 720 s</td></tr>
</table>

Function code	Description	Factory default	Setting
o216	Monitoring time	0	0.0 to 60.0s
o221 to o252	Write function code assignment 1 to 32 (max. 32 words)	0000_H	Set function code for writing output from master to inverter. (Group number) × 100_H + 2 lower order digits of function code (see inverter function code settings)
o253 to o284	Read function code assignment 1 to 32 (max. 32 words)	0000_H	Set function code for reading input from inverter to master. (Group number) × 100_H + 2 lower order digits of function code (see inverter function code settings)
o299	Apply Ethernet settings *1	0	0: Default value 1: Settings for o201 to o284 (*2) are reflected to the network (automatically return to 0).

*1 Supported with ROM0700 or later.
*2 The setting for o216 is reflected immediately.

Inverter function code settings (PROFINET-RT, EtherNet/IP)

If accessing inverter function codes, specify the function code type (Table 11.19-24) and number with a 4 digit hexadecimal number as follows.
However, these are ignored if the inverter has no function codes.

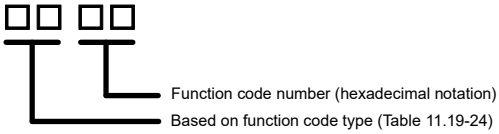

Table 11.19-24 Function code type

Type	Type code		Function code name	Type	Type code		Function code name
S	2	02_H	Command data	W3	25	19_H	Monitor data 2
M	3	03_H	Monitor data	X1	26	$1A_H$	Alarm data
F	4	04_H	Basic function	X2	27	$1B_H$	Reserved
E	5	05_H	Terminal function	Z1	28	$1C_H$	Reserved
C	6	06_H	Control function	K	29	$1D_H$	Keypad related function
P	7	07_H	Motor 1 parameters	T	30	$1E_H$	Scheduled operation
H	8	08_H	High-level function	E1	31	$1F_H$	Reserved
A	9	09_H	Motor 2 parameters	H1	32	20_H	High-level function
o	10	$0A_H$	Option functions	o1	33	21_H	Option function
L	11	$0B_H$	Specific purpose function	U1	34	22_H	Customizable logic function
r	12	$0C_H$	Motor 4 parameters	M1	35	23_H	Monitor data
U	13	$0D_H$	Customizable logic function	J1	36	24_H	Application function
J	14	$0E_H$	Application function	J2	37	25_H	Application function
y	15	$0F_H$	Link function	J3	38	26_H	Application function
W	16	10_H	Monitor data 2	J4	39	27_H	Application function
X	17	11_H	Alarm data	J5	40	28_H	Application function
Z	18	12_H	Alarm data 2	J6	41	29_H	Application function
b	19	13_H	Motor 3 parameters	d1	42	$2A_H$	Application function 2
d	20	14_H	Application function 2	d2	55	37_H	Application function 2
W1	23	17_H	Monitor data 2	o2	62	$3E_H$	Option function
W2	24	18_H	Monitor data 2				

Example: In the case of F26 F → type code 04
26 → 1A (hexadecimal notation) } "041A"

Inverter function code settings (Modbus TCP)

If accessing inverter function codes, specify the function code type (Table 11.19-25) and number with a 4 digit hexadecimal number as follows.
However, these are ignored if the inverter has no function codes.

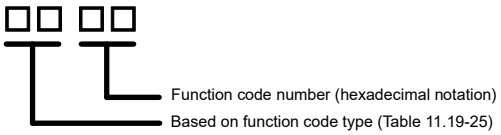

Table 11.19-25 Function code type

Type	Type code		Function code name	Type	Type code		Function code name
S	7	07_H	Command data	W3	24	18_H	Monitor data 2
M	8	08_H	Monitor data	X1	25	19_H	Alarm data
F	0	00_H	Basic function	X2	26	$1A_H$	Reserved
E	1	01_H	Terminal function	Z1	27	$1B_H$	Reserved
C	2	02_H	Control function	K	28	$1C_H$	Keypad related function
P	3	03_H	Motor 1 parameters	T	29	$1D_H$	Scheduled operation
H	4	04_H	High-level function	E1	30	$1E_H$	Reserved
A	5	05_H	Motor 2 parameters	H1	31	$1F_H$	High-level function
o	6	06_H	Option function	o1	37	25_H	Option function
L	9	09_H	Specific purpose function	U1	39	27_H	Customizable logic functions
r	10	$0A_H$	Motor 4 parameters	M1	41	29_H	Monitor data
U	11	$0B_H$	Customizable logic functions	J1	48	30_H	Application function
J	13	$0D_H$	Application function	J2	49	31_H	Application function
y	14	$0E_H$	Link function	J3	50	32_H	Application function
W	15	$0F_H$	Monitor data 2	J4	51	33_H	Application function
X	16	10_H	Alarm data	J5	52	34_H	Application function
Z	17	11_H	Alarm data 2	J6	53	35_H	Application function
b	18	12_H	Motor 3 parameters	d1	54	36_H	Application function 2
d	19	13_H	Application function 2	d2	55	37_H	Application function 2
W1	22	16_H	Monitor data 2	o2	38	26_H	Option function
W2	23	17_H	Monitor data 2				

Example: In the case of F26 F → type code 00
26 → 1A (hexadecimal notation) } "001A"

11.19.8 Digital Input Interface Card (OPC-DI)

The digital input interface card is equipped with a 16-point digital input terminal (SINK/SOURCE method switching possible), and by installing the card in FRENIC-MEGA, the frequency can be set, and general-purpose input terminals can be extended with a binary code (8, 12, 15, 16 bits) or BCD code (4 digits).

Applicable ports

This interface card can be installed in one of the three FRENIC-MEGA option connection ports (A, B, and C ports).

Electrical specifications

Table 11.19-26

Terminal symbol	Item		Specification	
			Min.	Max.
[I1] to [I16]	Operating voltage (SINK)	ON level	0 V	2 V
		OFF level	22 V	27 V
	Operating voltage (SOURCE)	ON level	22 V	27 V
		OFF level	0 V	2 V
	Operating current when ON (when input voltage 0 V)		2.5 mA	5 mA
	Permissible leakage current when OFF		-	0.5 mA

Terminal function

Table 11.19-27

Terminal symbol	Terminal name	Function
[I1] to [I16]	Digital input 1 to 16	(1) The frequency can be set using the frequency setting methods set with function codes o19 and o20. Refer to “Function code settings” on the following page for details. (2) By setting function code o101 to o116, these terminal signals can be used as general-purpose input signals in the same way as terminal [X1] to [X9]. (3) The SINK/SOURCE method can be switched using SW1.
[M1]	External power supply input	This is a power supply input terminal used for an external power supply (+22 to +27 VDC).
[CM]	Digital common	This is a common terminal for digital input signals. Same electric potential as inverter unit terminal [CM]

Connection example

Table 11.19-28

Power supply	Connection example	
	SINK method	SOURCE method
Internal	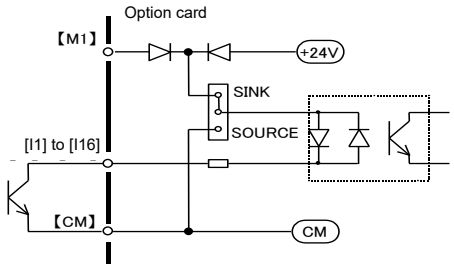	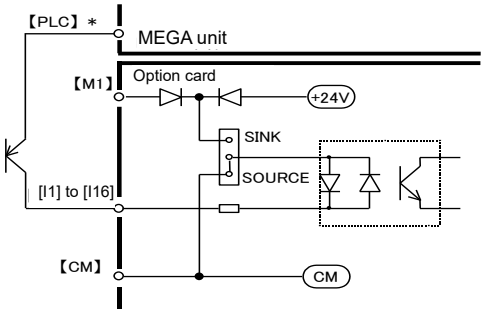 * The maximum permissible MEGA unit [PLC] terminal current is 100 mA
External	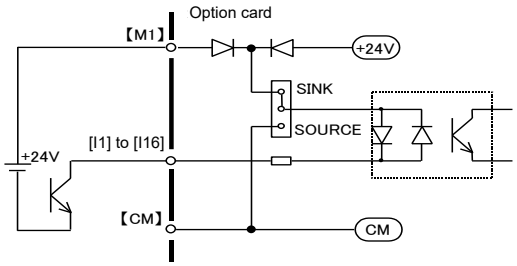	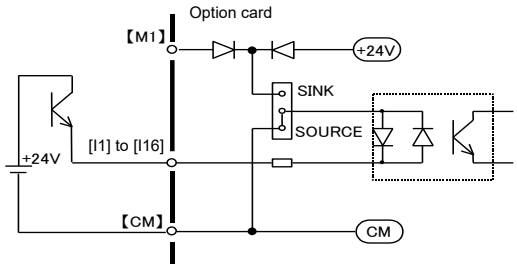

Function code settings

1. If setting the frequency

To enable frequency setting input from this interface card, it is necessary to set “11” (digital input interface) for function code F01 (frequency setting 1) or C30 (frequency setting 2). Furthermore, the frequency setting polarity and input mode are set with function code o19 (DI polarity selection) and o20 (DI mode selection).

The data for each bit is “0” when terminal input is OFF, and “1” when terminal input is ON.

Table 11.19-29

No.	o19	o20	Input signal name	Terminal function and description of setting content
(1)	0	0	8-bit binary frequency setting	Set resolution = Maximum output frequency x (1/255)
(2)	0	1	12-bit binary frequency setting	Set resolution = Maximum output frequency x (1/4095)
(3)	0	2	15-bit binary frequency setting	Set resolution = Maximum output frequency x (1/32767)
(4)	0	3	16-bit binary frequency setting	Set resolution = Maximum output frequency x (1/65535)
(5)	0,1	4	BCD, 4 digits Frequency setting (0 to 99.99 Hz)	The frequency can be set in the 0 to 99.99 Hz (set resolution = 0.01 Hz) range. If a value equal to or higher than the maximum output frequency is entered, the value is restricted to the maximum output frequency.

No.	o19	o20	Input signal name	Terminal function and description of setting content
(6)	0,1	5	BCD, 4 digits Frequency setting (0 to 599.0 Hz)	The frequency can be set in the 0 to 599.0 Hz (set resolution = 0.1 Hz) range. If a value equal to or higher than the maximum output frequency is entered, the value is restricted to the maximum output frequency.
(7)	1	0	8-bit binary frequency setting	Frequency setting range: - (Maximum output frequency) to + (maximum output frequency) -128 to +127 Set resolution = Maximum output frequency x (1/127)
(8)	1	1	12-bit binary frequency setting	Frequency setting range: - (Maximum output frequency) to + (maximum output frequency) -2048 to +2047 Set resolution = Maximum output frequency x (1/2047)
(9)	1	2	15-bit binary frequency setting	Frequency setting range: - (Maximum output frequency) to + (maximum output frequency) -16384 to +16383 Set resolution = Maximum output frequency x (1/16383)
(10)	1	3	16-bit binary frequency setting	Frequency setting range: - (Maximum output frequency) to + (maximum output frequency) -32768 to +32767 Set resolution = Maximum output frequency x (1/32767)

(Note) When o20 = 4 or 5 (BCD code), operation is performed “without polarity”.

2. If using as a general-purpose digital input

Terminals can be used as general-purpose input terminals in the same way as terminal [X1] to [X9].

Function code	Name	Setting code and content	Factory default
o20	Input mode selection	90: General-purpose digital input	0
o101	Terminal [I1] (Function selection)	Same content as function codes E01 to E09 Refer to Chapter 5 “FUNCTION CODES".	100
o102	Terminal [I2] (Function selection)		100
to	to		100
o116	Terminal [I16] (Function selection)		100

11.19.9 Digital Output Interface Card (OPC-DO)

The digital output interface card is equipped with an 8-point transistor output terminal (compatible with SINK method/SOURCE method), and by installing it in FRENIC-MEGA, output frequency, etc. can be monitoredand general-purpose output terminals can be extended with binary code (8 bits).

Applicable ports

This interface card can be installed in one of the three FRENIC-MEGA option connection ports (A, B, and C ports).

Electrical specifications

Table 11.19-30

Terminal symbol	Item		Specification
			Max.
[O1] to [O8]	Operating voltage	ON level	2 V
		OFF level	27 V
	Source current when ON		50 mA
	Leakage current when OFF		0.1 mA

Terminal function

Table 11.19-31

Terminal symbol	Terminal name	Function
[O1] to [O8]	Transistor output 1 to 8	(1) All signals (output frequency, output current, etc.) set with function code o21 can be output as 8-bit parallel signals. (2) Signals can be output as general-purpose digital output.
[M2]	Transistor output common	This is a common terminal for transistor output signals. The terminal is insulated from inverter unit terminals [CM], [11], and [CMY].

Connection example

Table 11.19-32

SINK method	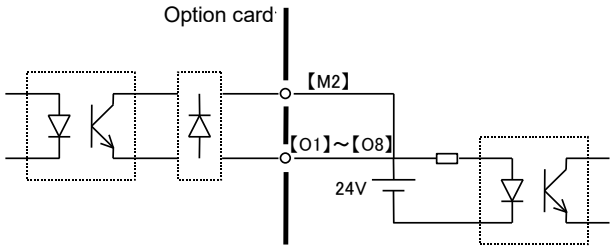
SOURCE method	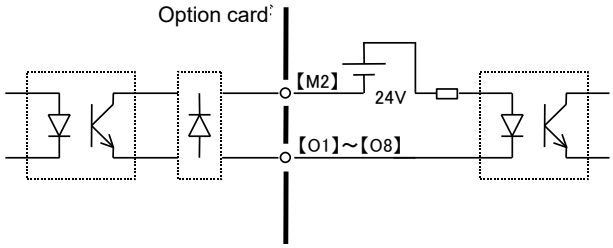

Function code settings

1. If using as an output status monitor

Items monitored with this interface card digital signals are set with function code o21 (DO mode selection). The same monitor signals to those of analog output (terminal [FM1], [FM2]) can be output as digital signals.

Terminal output turns OFF when the data bit is set to “0”, and ON when the data bit is set to “1”.

Table 11.19-33

Function code	LED	Output signal name	Terminal function and description of setting content
o21	0	Refer to F31 (terminal [FM1] function selection) in Chapter “5 FUNCTION CODES".	Output with terminal [01] (LSB) to terminal [08] (MSB) 8-bit signals. Max. value: 255
	1		
	2		
	to		
	124		

2. If using as a general-purpose digital output

Terminals can be used as general-purpose output terminals in the same way as terminal [Y1] to [Y4].

Function code	Name	Setting code and content	Factory default
o21	Output mode selection	90: General-purpose digital output	0
o121	Terminal [o1] (Function selection)	Same content as function codes E20 to E24 Refer to Chapter 5 “FUNCTION CODES".	0
o122	Terminal [o2] (Function selection)		2
o123	Terminal [o3] (Function selection)		1
o124	Terminal [o4] (Function selection)		3
o125	Terminal [o5] (Function selection)		5
o126	Terminal [o6] (Function selection)		6
o127	Terminal [o7] (Function selection)		100
o128	Terminal [o8] (Function selection)		100

11.19.10 Analog Interface Card (OPC-AIO)

The analog interface card is equipped with the following terminals, and by installing in FRENIC-MEGA, analog input and output can also be used.

- One analog voltage input (0 to ±10 V)
- One analog current input (4 to 20 mA)
- One analog voltage output (0 to ±10 V)
- One analog current output (4 to 20 mA)

Applicable ports

This interface card can be installed in one of the three FRENIC-MEGA option connection ports (A, B, and C ports).

Terminal function

Table 11.19-34

Classification	Terminal symbol	Terminal name	Explanation	Remarks
Analog input	[P10]	Power supply for potentiometer	Power supply for frequency command potentiometer (Variable resistor: 1 to 5 kΩ) (max. 10 VDC, 10 mA DC)	
	[32]	Analog voltage input	• Used as frequency setting voltage input. 0 to ±10 VDC/0 to ±100% (0 to ±5 VDC/0 to ±100%) • Signals that can be input to inverter standard terminal [12] can be selected. • Resolution: 1/3000	Input impedance: 22 kΩ Maximum input: ±15 VDC
	[C2]	Analog current input	• Used as frequency setting current input. 4 to 20 mA DC/0 to 100% • Signals that can be input to inverter standard terminal [12] can be selected. • Resolution: 1/3000	Input impedance: 250 Ω Maximum input: 30 mA DC
	[31]	Analog common	• Reference terminal for frequency setting signals (P10, 32, C2)	Equipotent with the inverter's terminal [11]
Analog output	[Ao+]	Voltage output +	• Outputs analog DC voltage analog 0 to ±10 VDC monitor signal. • Signals that can be output from inverter standard terminal [FM1] can be selected. • Resolution: 1/3000 * Capable of driving up to two analog voltmeters with 10 kΩ impedance.	
	[Ao-]	Analog voltage output -	• Reference terminal for analog voltage output + [Ao+]	Equipotent with the inverter's terminal [11]

Classification	Terminal symbol	Terminal name	Explanation	Remarks
	[CS+]	Analog current output +	• Outputs the analog DC current 4 to 20 mA DC monitor signal. • Signals that can be output from inverter standard terminal [FM1] can be selected. • Resolution: 1/3000 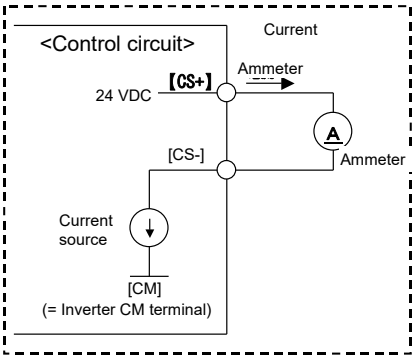 * Can be connected to a measuring instrument up with maximum resistance of 500 Ω.	Isolated from terminals [31], [Ao-], and [11]
	[CS-]	Analog current output -		

Connection example

Table 11.19-35

Terminal symbol	Connection method
[32]	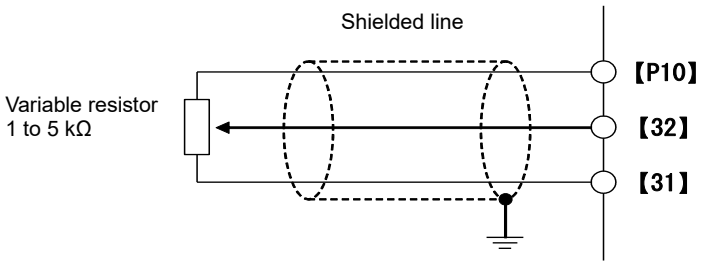
[C2]	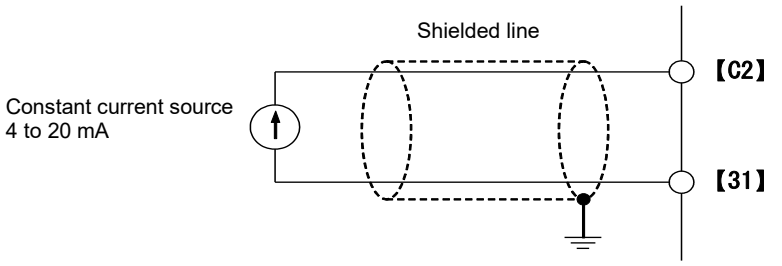
[Ao]	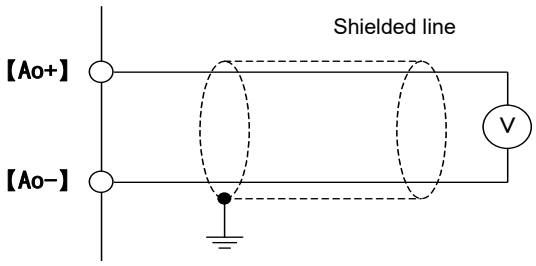
[CS]	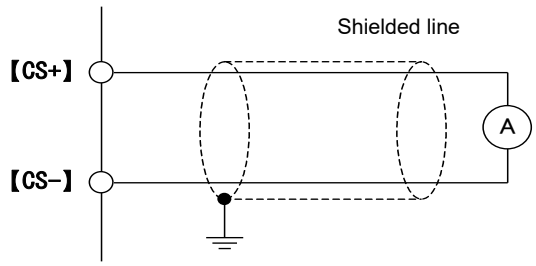

Function code settings

Table 11.19-36 Analog input terminal [32] function code setting content

Function code	Function code content	LED	Data content	Factory default
o60	Terminal [32] (Function selection)	0 to 49	Refer to E61 to E63 (extension function selection) in Chapter 5 "FUNCTION CODES".	0: No extension function assignment
o61	(Offset adjustment)	-5.0 to +5.0%	Offset adjustment value	0.0
o62	(Gain adjustment)	0.00 to 400.00%	Gain adjustment value	100.00
o63	(Filter setting)	0.00 to 5.00 s	Filter constant	0.05
o64	(Gain reference point)	0.00 to 100.00%	Gain reference point	100.00
o65	(Polarity selection)	0 1	Bipolar Unipolar	1
o66	(Bias)	-200.00 to 200.00%	Bias adjustment value	0.00
o67	(Bias reference point)	0.00 to 100.00%	Bias reference point	0.00
o69	(Display unit)	1 to 93	Refer to J105 to J107 (PID control) in Chapter 5 "FUNCTION CODES".	2
o70	(Maximum scale)	-999 to 0.00 to 9990		100
o71	(Minimum scale)	-999 to 0.00 to 9990		0.00

Table 11.19-36 Analog input terminal [32] function code setting content

Function code	Function code content	LED	Data content	Factory default
o75	Terminal [C2] (Range selection)	0	4 to 20 mA (0 to 100%)	0
		1	0 to 20 mA (0 to 100%)	
		10	4 to 20 mA (-100 to 100%)	
		11	0 to 20 mA (-100 to 100%)	
o76	(Function selection)	0	Refer to E61 to E63 (extension function selection) in Chapter 5 "FUNCTION CODES".	0: No extension function assignment
		to		
		49		
o77	(Offset adjustment)	-5.0 to +5.0%	Offset adjustment value	0.0
o78	(Gain adjustment)	0.00 to 400.00%	Gain adjustment value	100.00
o79	(Filter setting)	0.00 to 5.00 s	Filter constant	0.05
o81	(Gain reference point)	0.00 to 100.00%	Gain reference point	100.00
o82	(Bias)	-200.00 to 200.00%	Bias adjustment value	0.00
o83	(Bias reference point)	0.00 to 100.00%		0.00
o85	(Display unit)	1 to 93	Refer to J105 to J107 (PID control) in Chapter 5 "FUNCTION CODES".	2
o86	(Maximum scale)	-999 to 0.00 to 9990		100.0
o87	(Minimum scale)	-999 to 0.00 to 9990		0.00

Table 11.19-37 Analog voltage output terminal [Ao] function code setting content

Function code	Function code content	LED	Data content	Factory default
o90	Terminal [Ao] (Function selection)	0	Refer to F31 (terminal [FM1] function selection) in Chapter “5 FUNCTION CODES".	0: Output frequency (before slip compensation)
		to		
		124		
o91	(Gain adjustment)	0 to 300%	Gain adjustment value	100
o93	(Polarity selection)	0 1	Bipolar Unipolar	1

Table 11.19-38 Analog current output terminal [CS] function code setting content

Function code	Function code content	LED	Data content	Remarks
o96	Terminal [CS] (Function selection)	0	Refer to F31 (terminal [FM1] function selection) in Chapter “5 FUNCTION CODES".	0: Output frequency (before slip compensation)
		to		
		124		
o97	(Output gain)	0 to 300%	Gain adjustment value	100

11.19.11 Analog current output (2ch) interface card (OPC-AO)

By equipping the FRENIC-MEGA(G2) (ROM0500 or later) with an analog current output interface card,2ch analog output can be added.

- 2 analog current outputs (4 to 20 mA)

Note Analog interface card OPC-AIO and analog current output interface card OPC-AO cannot be installed simultaneously.

Applicable ports

This interface card can be installed in one of the three FRENIC-MEGA(G2) option connection ports (ports A, B, C).

Terminal function

Table 11.19-39

Class	Terminal Symbol	Terminal name	Detailed specifications	Remarks
Analog current output	CS1+ CS2+	Analog current output +	・Outputs an analog DC current 4 to 20 mA DC monitor signal. ・Signals that can be output from inverter standard terminal [FM1] and [FM2] can be selected for CS1 and CS2. ・Resolution: 1/3000 ・Output current error: Max. ±3% ・Connected device max. permissible input impedance:Max. 500 Ω 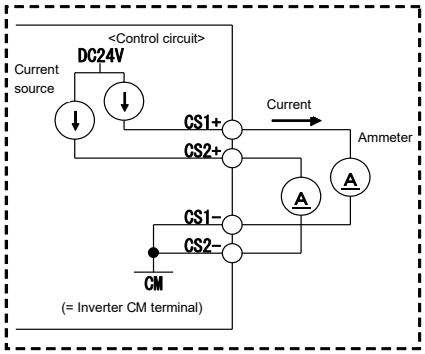 	11 terminals Insulated from (inverter unit terminals)
	CS1- CS2-	Analog current output -		

Connection example

Table 11.19-40

Terminal name	Connection method
CS1+ CS1- CS2+ CS2-	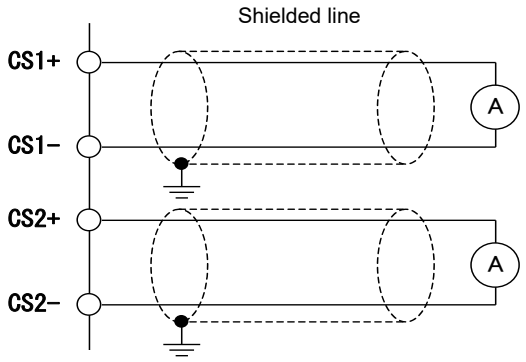

Function code settings

Table 11.19-41 Terminal [CS1] function code setting details

Function	Function code details	Data	Data content	Remarks
o96	Terminal [CS1] Function (Function)	0 ～ 124	Same as F31	
o97	(Output gain)	0 ～ 300 %	Gain adjustment	

Table 11.19-42 Terminal [CS2] function code setting details

Function	Function code details	Data	Data content	Remarks
o90	Terminal [CS2] Function (Function)	0 ～ 124	Same as F31	
o91	(Output gain)	0 ～ 300 %	Gain adjustment	

11.19.12 Resistance temperature detector input card (OPC-PT)

By equipping the FRENIC-MEGA(G2) (ROM0500 or later) with a resistance temperature detector input card (OPC-PT), temperature values can be converted to digital values by connecting a resistance temperature detector (hereafter referred to as RTD) directly to the inverter. Two RTDs can be connected. The following five types of RTD can be connected: JPt100, Pt100, Ni100, Pt1000, Ni1000.

Applicable ports

This interface card can be installed in one of the three FRENIC-MEGA (G2) option connection ports (ports A, B, C).

Specification

Table 11.19-43

Item	Specification	
Number of input channels	2 channels	
Connectable RTDs	JPt100, Pt100, Ni100, Pt1000, Ni1000 / 3-wire system * Set the RTD type with a function code.	
RTD exciting current	JPt100, Pt100, Ni100 : 1 mA Pt1000, Ni1000 : 0.5 mA * Switching with switch	
Measurement temperature range	-20～+100 ºC (-4～+212 ºF, 253～373 K)	
Resolution	0.01 ºC (0.01 ºF, 0.01 K)	
Accuracy	±0.3% FS (inverter ambient temperature: when 23 ◦C (73.4 ºF, 296 K) ±0.7% FS (total inverter specification range) * Does not include RTD error.	
Sampling cycle	Max. 700 ms/2 channels	
Input filter time *1	Hardware (time constant): 50 ms or less Digital filter time: 0.0 to 100.0 s (can be set in 0.1 s units (initial value: 1.0 s))	
Insulation method	Between sensor input terminal and internal logic	Photo coupler insulation
	Between sensor input terminal and [CM] [11] [CMY]	Transformer insulation
	Between sensor terminals	None
Error detection	Sensor disconnection/short circuit, wrong switch setting detection possible. *2	

*1 The input filter time does not affect the display.

*2 Be sure to specify the same sensor selection (o10, o15) as the sensor used.
Furthermore, do not wire across channels (error detection may not be possible.)
[-30 ◦C] is displayed when an error is detected.

Terminal function

Table 11.19-44

Terminal symbol		Terminal name	Specification
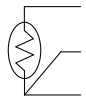	A1	RTD input terminal Channel 1	RTD connection terminal for channel 1
	b1		
	B1		
	A2	RTD input terminal Channel 2	RTD connection terminal for channel 2
	b2		
	B2		

Function code settings

Table 11.19-45

Function code	Function code details	Data	Data content	Remarks
o09	Display unit	60	Kelvin (K)	Factory default: 61
		61	Celsius (ºC)	
		62	Fahrenheit (ºF)	
o10	Channel 1(Sensor type)	0	JPt100: JIS C1604	Factory default: 0
		1	Pt100: JIS C1604 / IEC 60751	
		2	Ni100: DIN 43760	
		3	Pt1000: IEC 60751	
		4	Ni1000: DIN 43760	
o11	(Extended functions)	0	No extension function assignment	Factory default: 0
		5	PID feedback value 1	
		30	PID feedback value 2	
		42	External PID feedback value 1	
		45	Externa PID feedback value 2	
		48	Externa PID feedback value 3	
o12	(Digital filte)	0.0～100.0 s	Filter time	Factory default: 1.0 s
o15	Channel 2(Sensor type)	0～4	Same as o10	Factory default: 0
o16	(Extended functions)	0～48	Same as o11	Factory default: 0
o17	(Digital filte)	0.0～100.0 s	Same as o12	Factory default: 1.0 s

Switch settings

It is possible to change the option switch depending on the type of sensor connected.

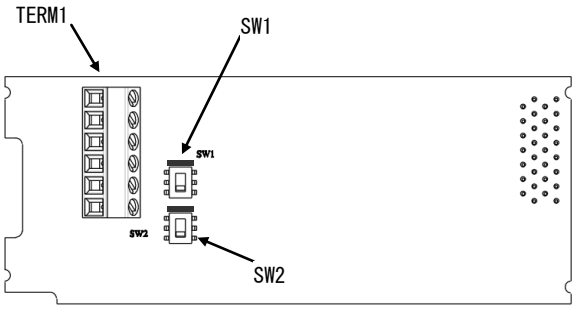

Fig. 11.19-10

Table 11.19-46

	Sensor type	SW setting	Factory default
SW1: Channel 1 SW2: Channel 2	JPt100		
	Pt100		
	Ni100		
	Pt1000		
	Ni1000		

Detected temperature display

Table 11.19-47 Detected temperature (after digital filter) displays on the keypad I/O monitor.

Monitor No	Symbol	Item	Unit	Description
4_13	Pt.Ch1	PT detection temperature (Ch.1)	℃	Displays the PT option Ch.1 temperature in (◦C).
4_14	Pt.Ch2	PT detection temperature (Ch.2)	℃	Displays the PT option Ch.2 temperature in (◦C).

11.19.13 Relay Output Interface Card (OPC-RY)

The relay output interface card is a general-purpose output signal relay output (1C contact) card. It is equipped with two relay outputs, and four relay outputs are possible by installing two of these interface cards.

The signals output to each relay output are set with function codes E20 to E23. By selecting active OFF with a function code, relays can be set to a non-excitation state when active, allowing the card to be used for fail safe applications.

By selecting function code o22 = 1, a different output setting to terminal [Y1] to [Y4] can be specified.

Applicable ports

FRENIC-MEGA is equipped with three option connection ports. Please note that restrictions apply to each connection port.

Table 11.19-48

Port	Output signal	Output signal assignment	Remarks
		When function code o22 = 0 (factory default)	When function code o22 = 1
A port	Relay output 1 Relay output 2	Function code E20 (linked to terminal Y1) Function code E21 (linked to terminal Y2)	Function code o23 (operates independently) Function code o24 (operates independently)
B port	Relay output 1 Relay output 2	Function code E22 (linked to terminal Y3) Function code E23 (linked to terminal Y4)	Function code o25 (operates independently) Function code o26 (operates independently)
C port	Connection not possible		

Terminal function

Table 11.19-49

Terminal symbol	Terminal name	Function description
[1A] [1B] [1C]	Relay output 1	• Terminal [Y1] (A port)/[Y3] (B port) signals are output with relay contacts. • Signals are selected with function codes o23 / o25, output with relay contacts.
[2A] [2B] [2C]	Relay output 2	• Terminal [Y2] (A port)/[Y4] (B port) signals are output with relay contacts. • Signals are selected with function codes o24 / o26, output with relay contacts.

Electrical specifications

Table 11.19-50

Item	Specification
Contact capacity	250 VAC, 0.3 A COSΦ = 0.3 or, 48 VDC, 0.5 A (with resistive load)
Contact life expectancy	250 VAC, 0.3 A: 200,000 times (if turned ON, OFF in 1 second intervals) 48 VDC, 0.5 A: 200,000 times (if turned ON, OFF in 1 second intervals) Note) Where frequent ON/OFF switching is anticipated (for example, when selecting signals during inverter output limiting to perform aggressive current limiting), use terminal [Y1] to [Y4] (transistor output).
Applicable safety standards	EN61800-5-1: Over Voltage Category II (reinforced insulation) 250 VAC

Internal circuit configuration

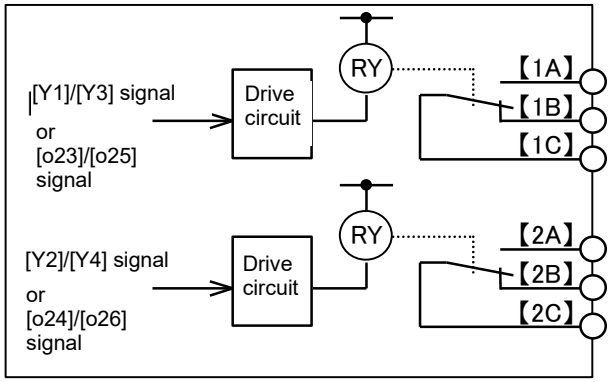

Fig. 11.19-11 Internal circuit configuration

Relay output functions can be selected with the following function codes.

Table 11.19-51

Function code	Function code content	Data setting range	Factory default
o22	RY option (Mode selection)	0: Linked to terminal [Y1] to [Y4] 1: Set independently	0: Linked to terminal [Y1] to [Y4]
o23	RY1 output signal (port A)	The content is the same as that for function codes E20 to E24. Refer to Chapter 5 “FUNCTION CODES”.	0: Running
o24	RY2 output signal (port A)		1: Frequency arrival
o25	RY1 output signal (port B)		2: Frequency detection
o26	RY2 output signal (port B)		7: Motor overload early warning

11.19.14 Relay output interface card (OPC-RY2)

7 relay outputs (1A contacts) can be added by equipping the FRENIC-MEGA(G2) (ROM0500 or later) with a relay output interface card (OPC-RY2). If used for cascade operation, 7 motors can be controlled with this card (if also using the 2 inverter unit relay outputs, cascade operation is possible for up to 8 motors + 1 (auxiliary pump)).

Applicable ports

This card can be installed in two (ports B or C) of the three FRENIC-MEGA(G2) option connection ports (ports A, B, C). It is not possible to install two or more cards.

Terminal function

Table 11.19-52

Terminal symbol	Terminal name	Terminal description
【6A/6C】	Relay output 6	These relay contact outputs output the signals (running signals, frequency arrival signals, load early warning signals, etc.) selected with function codes o01 to o07. Short circuit between [*A and *C] when the output signal is active (when active ON). * is replaced with numbers 6 to 12.
【7A/7C】	Relay output 7	
【8A/8C】	Relay output 8	
【9A/9C】	Relay output 9	
【10A/10C】	Relay output 10	
【11A/11C】	Relay output 11	
【12A/12C】	Relay output 12	

Electrical specifications

Table 11.19-53

Item	Specification
Contact capacity	250 VAC, 0.3 A COSφ = 0.3 or, 48 VDC,0.5 A (with resistive load)
Contact life expectancy	250 VAC, 0.3 A: 200,000 times (if turned ON and OFF in 1 second intervals) 48 VDC, 0.5 A: 200,000 times (if turned ON and OFF in 1 second intervals) Note) If frequent ON and OFF operations are expected, (e.g., if using current limiting aggressively by selecting signals during inverter output limiting), use terminals [Y1] to [Y4] (transistor output).
Compatible standard	EN61800-5-1, Over Voltage Category II (reinforced insulation) 250 VAC

Internal circuit configuration

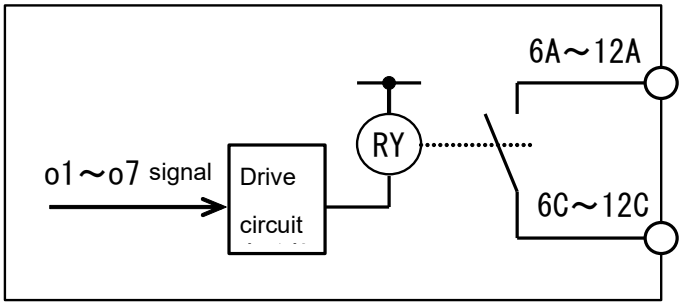

Fig. 11.19-12 Internal circuit configuration

Table 11.19-54 Relay output functions are selected with the following function codes.

Function code	Terminal name	Settable range
o01	Relay output 6 (Function selection)	Refer to “CHAPTER 5 FUNCTION CODES” for the same content as function code E20.
o02	Relay output 7 (Function selection)	
o03	Relay output 8 (Function selection)	
o04	Relay output 9 (Function selection)	
o05	Relay output 10 (Function selection)	
o06	Relay output 11 (Function selection)	
o07	Relay output 12 (Function selection)	

Relay output 6 to relay output 12 signals are programmable general-purpose output signals, and functions can be assigned using o01 to o07.These function codes can also switch the logic system between normal and negative to define how the inverter logic interprets the ON or OFF state of each terminal.

By using the logic inversion setting, each signal is active (e.g., side at which alarm is occurring) for the period during which the inverter power is OFF. If necessary, take external measures by applying interlocks such as power ON signals.

Furthermore, signals are not output normally for approximately 2 seconds even after turning ON the power, and therefore measures such as external masking should be used.

11.19.15 PG Interface Card (OPC-PG)

The PG interface card is equipped with a 2 system pulse (ABZ-phase) input circuit and PG (pulse generator) power supply output circuit, and the following functions can be realized by installing it in FRENIC-MEGA.

(1) Speed control with PG feedback signal (vector control with speed sensor, V/f control with speed sensor, dynamic torque vector control with speed sensor) and servo lock function

(2) Pulse train input as frequency command

Note) By installing this interface card in FRENIC-MEGA, the inverter unit terminal [X6] and [X7] pulse train input function cannot be used.

Applicable port

This interface card can be installed only in port C of the three FRENIC-MEGA option connection ports (A, B, and C ports).

PG interface specifications

The PG interface specifications for this interface card are shown in Table 11.19-55.

Table 11.19-55 PG interface specifications

Item	Specification
Encoder pulse count	20 to 3000 P/R (A-phase, B-phase, Z-phase incremental type)
Pulse input mode	Open collector method (wire length: 20 m or less) Complementary method (wire length: 100 m or less)
Pulse input voltage	High level ≥ 8 V, Low level ≤ 3 V (when using 12 V power supply specification) High level ≥ 10 V, Low level ≤ 3 V (when using 15 V power supply specification)
Pulse input current	8 mA or less
PG power supply *1	+12 VDC ±10%/120 mA or less, or +15 VDC ±10%/120 mA or less

*1 If the PG power supply current exceeds 120 mA, use an external power supply.

Pulse train input interface specifications

The pulse train input specifications for this interface card are shown in Table 11.19-56.

Table 11.19-56 Pulse train input interface specifications

Item	Specification
Input pulse frequency	Up to 30 kHz (open collector method) Up to 100 kHz (complementary method)
Pulse input mode	Open collector method (wire length: 20 m or less) Complementary method (wire length: 100 m or less)
Pulse input voltage	High level ≥ 8 V, w level ≤ 3 V (when using 12 V power supply specification) High level ≥ 10 V, w level ≤ 3 V (when using 15 V power supply specification)
Pulse input current	8 mA or less

Terminal function

Table 11.19-57

Terminal symbol	Terminal name	Specification
[PI]	External power supply input terminal *1	Terminal for inputting external PG power supply +12 VDC ±10% input, or +15 VDC ±10% input (Ensure that the connected power supply is equal to or greater than the PG power supply current consumption +150 mA.)
[PO]	Power supply output terminal *2	Terminal for outputting external PG power supply +12 VDC ±10%/120 mA output, or +15 VDC ±10%/120 mA output
[CM]	Common output	PG power supply common terminal (Same electric potential as inverter unit terminal [CM])
[XA]	Command A-phase pulse input terminal	Terminal for inputting command pulse A-phase signal
[XB]	Command B-phase pulse input terminal	Terminal for inputting command pulse B-phase signal
[XZ]	-	(Not used)
[YA]	Feedback A-phase pulse input terminal	Terminal for inputting feedback pulse A-phase signal
[YB]	Feedback B-phase pulse input terminal	Terminal for inputting feedback pulse B-phase signal
[YZ]	Feedback Z-phase pulse input terminal	Terminal for inputting feedback pulse Z-phase signal

*1 If the PG power supply power consumption exceeds 120 mA, use an external power supply.

*2 Change the internal switch based on the voltage specification for the PG power supply used.

Internal circuit configuration

The internal circuit configuration is shown in Fig. 11.19-13. This diagram shows an example of power being supplied from the internal power supply (12 v) to the PG.

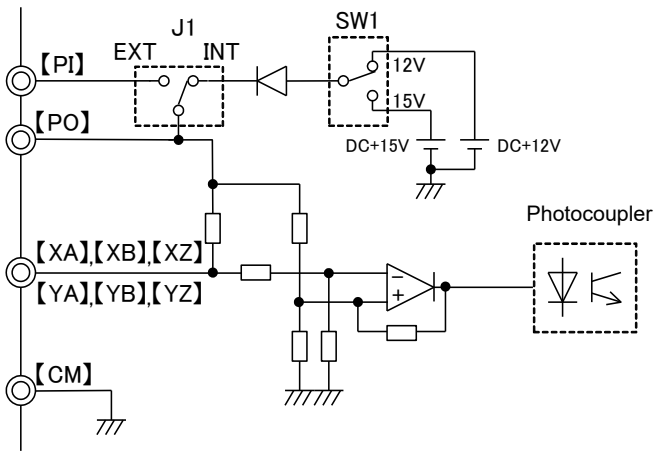

Fig. 11.19-13 Internal circuit configuration

Control method

Speed control (vector control with speed sensor, V/f control with speed sensor, dynamic torque vector control with speed sensor)

The motor speed is detected with a feedback signal from the motor PG (pulse generator). This control makes it possible to achieve speed control with responsiveness.

(The use of a dedicated Fuji motor for vector control (VG motor) is recommended for the motor when performing vector control.)

Table 11.19-58

Item		Specification	Remarks
Control specifications *1	Maximum output frequency	5 to 599 Hz (encoder upper limit pulse: 30 kHz/100 kHz *2)	When using VG motor (1024 P/R)
	Speed control range	Under vector control with speed sensor Minimum speed: base speed (1:1500) (in the case of 4P motor: 1 to 1500 min^{-1}) Under V/f control with speed sensor, dynamic torque vector control with speed sensor Minimum speed: base speed (1:100) (in the case of 4P motor: 15 to 1500 min^{-1})	
	Speed control accuracy	Rated rotation speed ±0.2% (25 ºC ±10 ºC)	

*1 The control performance changes significantly depending on the pulse count. A pulse count of 1024 P/R or higher is recommended.

*2 30 kHz: open collector type, 100 kHz: complementary type

Pulse train input

Pulse train input is a function used to give inverter frequency commands with a pulse train. Pulse train sign/pulse train input, forward rotation pulse/reverse rotation pulse, and AB-phase 90° phase difference pulse train input are possible. Use terminal [XA] and terminal [XB] for pulse train input.

Table 11.19-59

Pulse train format	Operation overview
Pulse train sign / Pulse train input	Terminal [XB] frequency/speed command according to the pulse train rate is given to the inverter. Furthermore, the speed command polarity can be set with terminal [XA] ON/OFF input *1.
Forward rotation pulse / Reverse rotation pulse	If there is terminal [XB] pulse train input, a positive polarity speed command based on the frequency is given to the inverter. If there is terminal [XA] pulse train input, a reverse polarity speed command based on the frequency is given to the inverter. *1
A, B phase 90° phase difference	Speed commands with polarity are given to the inverter unit from the phase difference and frequency from two types of pulse signal with terminal [XA] and terminal [XB] 90° phase difference. *1

*1 The rotation direction of the motor is determined by the polarity of the pulse train input and the inverter unit “FWD”/”REV” commands.

11.19.16 PG Interface (5 V Line Driver) Card (OPC-PG2)

The PG interface (5 V line driver) card is equipped with a 5 V line driver output type PG (pulse generator) 1 system pulse (A-, B-, Z-phase) input circuit, a wire break detection circuit (Z-phase can be canceled), and a PG power supply output circuit.

The following functions can be realized by installing this interface card in FRENIC-MEGA.

(1) Speed control with PG feedback signal (vector control with speed sensor, V/f control with speed sensor, dynamic torque vector control with speed sensor) and servo lock function

(2) Pulse train input as frequency command

Applicable port

This interface card can be installed only in port C of the three FRENIC-MEGA option connection ports (A, B, and C ports).

PG interface specifications

Table 11.19-60

Item		Specification
PG used	Output pulse count	20 to 3000 P/R
	Max. response frequency	100 kHz
	Pulse output method	Line driver method (26C31, 26LS31 or equivalent) SOURCE current + 20 mA (max.) SINK current -20 mA (max.)
	Max. wire length *1	100 m (when using cable coil diameter AWG 16)
PG power supply *2		+5 VDC ±10%/200 mA or less

*1 The relationship between wire length and minimum connectable coil diameter is shown in Table 11.19-61.

*2 If the PG power supply current exceeds 200 mA, use an external power supply.

Table 11.19-61 Relationship between wire length and minimum connectable coil diameter

PG power supply specification	Wire length [m]				
	Up to 20	Up to 30	Up to 50	Up to 75	Up to 100
5 V ±10%, 200 mA	AWG24 (0.25 mm^2)	AWG22 (0.34 mm^2)	AWG20 (0.50 mm^2)	AWG18 (0.75 mm^2)	AWG16 (1.25 mm^2)

Terminal function

Table 11.19-62

Terminal symbol	Terminal name	Function
[PI]	External power supply input terminal *1	Terminal for inputting external PG power supply +5 VDC ±10% input *2 (Ensure that the connected power supply is equal to or greater than the PG power supply current consumption of 200 mA.)
[PO]	Internal power supply output terminal	Terminal for outputting external PG power supply +5 VDC -0% to +10%/200 mA output
[CM]	Common terminal	PG power supply common terminal (same electric potential as inverter unit terminal [CM])
[YA]	Feedback A (+) phase pulse input terminal	Terminal for inputting feedback pulse A-phase (+) signal
[*YA]	Feedback A (-) phase pulse input terminal	Terminal for inputting feedback pulse A-phase (-) signal
[YB]	Feedback B (+) phase pulse input terminal	Terminal for inputting feedback pulse B-phase (+) signal
[*YB]	Feedback B (-) phase pulse input terminal	Terminal for inputting feedback pulse B-phase (-) signal
[YZ]	Feedback Z (+) phase pulse input terminal	Terminal for inputting feedback pulse Z-phase (+) signal
[*YZ]	Feedback Z (-) phase pulse input terminal	Terminal for inputting feedback pulse Z-phase (-) signal

*1 If the PG power supply power current consumption exceeds 200 mA, use an external power supply.

*2 Use an external power supply to match the allowable voltage range for the PG. Furthermore, adjust the external power supply voltage within the PI voltage range (upper limit +10%) taking the voltage drop caused by the PG and wiring impedance into consideration. Or use a wire with thicker coil diameter.

Circuit configuration

The circuit configuration is shown below. This diagram shows an example of power being supplied from the internal power supply (5 v) to the PG. (J1: INT side)

Input for each phase is equipped with a wire break detection circuit. The A-phase and B-phase wire break detection circuits are always enabled. The Z-phase wire break detection circuit can be enabled or disabled by setting the SW1 switch (Fig. 11.19-15) to the ON side or OFF side. The SW1 switch is set to the OFF side by factory default.

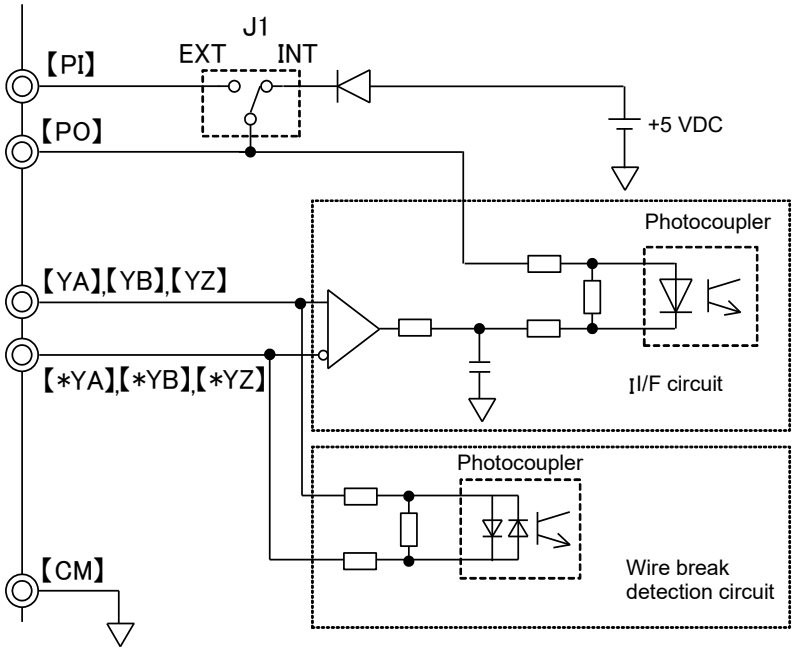

Fig. 11.19-14 Circuit configuration

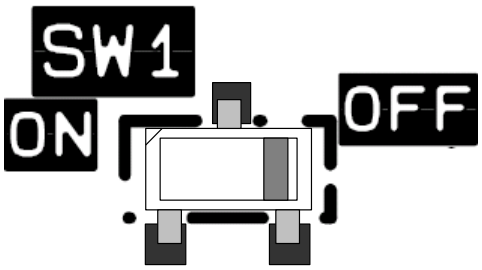

Fig. 11.19-15 Switch setting diagram for Z-phase wire break detection

Control method

Speed control (vector control with speed sensor, V/f control with speed sensor, dynamic torque vector control with speed sensor)

The motor speed is detected with a feedback signal from the motor PG (pulse generator). Motor current is divided up into excitation current and torque current, each of which can be controlled with vector control, enabling high-accuracy, high-response speed control. Refer to Chapter 5 "FUNCTION CODES" for details on vector control settings and adjustment.

(The use of a dedicated Fuji motor for vector control (VG motor) is recommended for the motor when performing vector control.)

Table 11.19-63

Item		Specification	Remarks
Control specifications *1	Maximum output frequency	5 to 599 Hz (encoder upper limit pulse: 100 kHz)	When using 1024 P/R
	Speed control range	Under vector control with speed sensor Minimum speed: base speed (1:1500) (in the case of 4P motor: 1 to 1500 min^{-1}) Under V/f control with speed sensor, dynamic torque vector control with speed sensor Minimum speed: base speed (1:100) (in the case of 4P motor: 1 to 1500 min^{-1})	
	Speed control accuracy	Analog setting: ±0.2% of maximum frequency or below (at 25 ±10 °C) Digital setting: ±0.01% of maximum output frequency or below (at -10 to +50 ºC)	

*1 The control performance changes significantly depending on the pulse count. A pulse count of 1024 P/R or higher is recommended.

11.19.17 PG Interface (5 V Line Driver x 2 Systems) Card (OPC-PG22)

The PG interface (5 V line driver x 2 systems) card is equipped with a 5 V line driver output type 2 system pulse (YA, YB, YZ and XA, XB, XZ) input circuit, a wire break detection circuit (YZ, XA, XB, and XZ-phases can be canceled), and a PG (pulse generator) power supply output circuit. With this card, master-follower operation is possible for two motors with PG with feedback signals from the PG, positioning control can be performed, and frequency commands can be specified with pulse train input.

Applicable port

This interface card can be installed only in port C of the three FRENIC-MEGA option connection ports (A, B, and C ports). However, the B port space is also occupied when this card is installed, meaning that it is not possible to install any other option cards in the B port.

PG interface specifications

Table 11.19-64

Item		Specification
PG used	Output pulse count	20 to 3000 P/R (Note 1)
	Max. response frequency	100 kHz
	Pulse output method	Line driver method (26C31, 26LS31 or equivalent) SOURCE current +20 mA (max.) SINK current -20 mA (max.)
	Max. wire length (Note 3)	100 m
PG power supply		+5 V ±10%/300 mA or less (Note 2)

Note 1) The setting range is 20 to 60000 P/R.

Note 2) If the total connected PG power supply current exceeds 300 mA, use an external power supply.

Note 3) If PG power supply specifications are no longer satisfied due to the voltage drop that occurs when increasing the wire length, increase the cable diameter. A wire length and cable coil diameter guide is shown in Table 11.19-65. Or use an external power supply.

Note 4) Use a PG with the same pulse count for the master side PG and follower side PG when performing master-follower operation.

Table 11.19-65 Relationship between wire length and minimum connectable coil diameter

PG power supply specification	Wire length (m)				
	Up to 20	Up to 30	Up to 50	Up to 75	Up to 100
5 VDC ±10%, 300 mA	AWG24 (0.25 mm^2)	AWG22 (0.34 mm^2)	AWG20 (0.50 mm^2)	AWG18 (0.75 mm^2)	AWG16 (1.25 mm^2)

Pulse train input interface specifications

Table 11.19-66

Item		Specification
Pulse train generator	Max. response frequency	100 kHz
	Pulse output method	Line driver method (26C31, 26LS31 or equivalent) SOURCE current +20 mA (max.) SINK current -20 mA (max.)
	Max. wire length	100 m

Terminal function description

Table 11.19-67

Terminal symbol	Terminal name	Terminal function description
[PI]	External power supply input terminal (Note 1)	Terminal for inputting external PG power supply +5 VDC ±10% input (Note 2) (Ensure that the connected power supply is equal to or greater than the PG power supply current consumption.)
[PO]	Internal power supply output terminal	Terminal for outputting PG power supply When +5 VDC -0% to +10%/300 mA output
[CM]	Common terminal	PG power supply common terminal (Same electric potential as inverter unit terminal [CM])
[YA]	YA (+) phase pulse input terminal	Terminal for inputting follower side pulse YA (+) phase signal
[*YA]	YA (-) phase pulse input terminal	Terminal for inputting follower side pulse YA (-) phase signal
[YB]	YB (+) phase pulse input terminal	Terminal for inputting follower side pulse YB (+) phase signal
[*YB]	YB (-) phase pulse input terminal	Terminal for inputting follower side pulse YB (-) phase signal
[YZ]	YZ (+) phase pulse input terminal	Terminal for inputting follower side pulse YZ (+) phase signal
[*YZ]	YZ (-) phase pulse input terminal	Terminal for inputting follower side pulse YZ (-) phase signal
[XA]	XA (+) phase pulse input terminal	Terminal for inputting master side pulse XA (+) phase signal
[*XA]	XA (-) phase pulse input terminal	Terminal for inputting master side pulse XA (-) phase signal
[XB]	XB (+) phase pulse input terminal	Terminal for inputting master side pulse XB (+) phase signal
[*XB]	XB (-) phase pulse input terminal	Terminal for inputting master side pulse XB (-) phase signal
[XZ]	XZ (+) phase pulse input terminal	Terminal for inputting master side pulse XZ (+) phase signal
[*XZ]	XZ (-) phase pulse input terminal	Terminal for inputting master side pulse XZ (-) phase signal

Note 1) If the total connected PG current consumption exceeds 300 mA, use an external power supply.

Note 2) Use an external power supply to match the allowable voltage range for the PG. Furthermore, adjust the external power supply voltage within the PI voltage range (upper limit +10%) taking the voltage drop caused by wiring impedance into consideration. Or use a wire with thicker coil diameter.

Circuit configuration

The circuit configuration is shown below. This diagram shows an example of power being supplied from the internal power supply (5 v) to the PG. (J1: INT side)

Input for each phase is equipped with a wire break detection circuit. This can be disabled if not performing YZ-, XA-, XB-, or XZ-phase wire break detection. The YA-phase and YB-phase wire break detection circuits are always enabled.

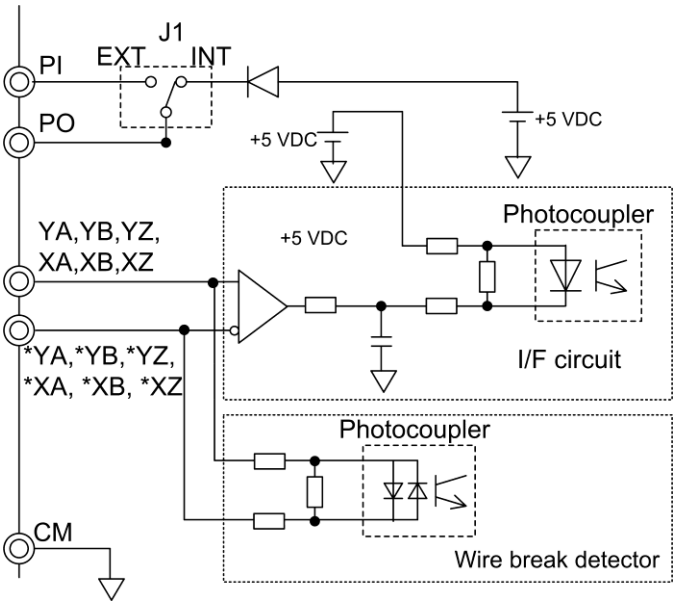

Fig. 11.19-16 Circuit configuration

Corresponding control method

By using this interface card, the following control is possible.

(1) Vector control with speed sensor

(2) V/f control with speed sensor, torque vector control with speed sensor

(3) Pulse train input

(4) Master-follower operation

(5) Positioning control

11.19.18 PG Interface Card for Synchronous Motor with Sensor (OPC-PMPG2)

The PG interface card for synchronous motor with sensor (OPC-PMPG2) is equipped with a 5 V line driver output type 2 system pulse (YA, YB, YZ and U, V, W) input circuit, a wire break detection circuit (YZ-, U-, V-, W-phases can be canceled), and a PG (pulse generator) power supply output circuit. With this card, vector control with sensor is possible for synchronous motors with speed and magnetic pole position sensor.

Applicable port

This interface card can be installed only in port C of the three FRENIC-MEGA option connection ports (A, B, and C ports). However, the B port space is also occupied when this card is installed, meaning that it is not possible to install any other option cards in the B port.

PG interface specifications

Table 11.19-68

Item		Specification
PG used	Output pulse count	20 to 3000 P/R (Note 1)
	Max. response frequency	100 kHz
	Pulse output method	Line driver method (26C31, 26LS31 or equivalent) SOURCE current +20 mA (max.) SINK current -20 mA (max.)
	Magnetic pole position detection method	3-bit code (U-, V-, W-phase) method
	Max. wire length (Note 3)	100 m
PG power supply		+5 VDC ±10%/300 mA or less (Note 2)

Note 1) The setting range is 20 to 60000 P/R.

Note 2) If the total connected PG power supply current exceeds 300 mA, use an external power supply.

Note 3) If PG power supply specifications are no longer satisfied due to the voltage drop that occurs when increasing the wire length, increase the cable diameter. A wire length and cable coil diameter guide is shown in Table 11.19-69. Or use an external power supply.

Table 11.19-69 Relationship between wire length and minimum connectable coil diameter

PG power supply specification	Wire length (m)				
	Up to 20	Up to 30	Up to 50	Up to 75	Up to 100
5 VDC ±10%, 300 mA	AWG24 (0.25 mm^2)	AWG22 (0.34 mm^2)	AWG20 (0.50 mm^2)	AWG18 (0.75 mm^2)	AWG16 (1.25 mm^2)

Terminal function description

Table 11.19-70

Terminal symbol	Terminal name	Function
[PI]	External power supply input terminal (Note 1)	Terminal for inputting external PG power supply +5 VDC ±10% input (Note 2) (Ensure that the connected power supply is equal to or greater than the PG power supply current consumption.)
[PO]	Internal power supply output terminal	Terminal for outputting external PG power supply +5 VDC -0% to +10%/300 mA output mm^2
[CM]	Common terminal	PG power supply common terminal (Same electric potential as inverter unit terminal [CM])
[YA]	YA (+) phase pulse input terminal	Terminal for inputting follower side pulse YA (+) phase signal
[*YA]	YA (-) phase pulse input terminal	Terminal for inputting follower side pulse YA (-) phase signal
[YB]	YB (+) phase pulse input terminal	Terminal for inputting follower side pulse YB (+) phase signal
[*YB]	YB (-) phase pulse input terminal	Terminal for inputting follower side pulse YB (-) phase signal
[YZ]	YZ (+) phase pulse input terminal	Terminal for inputting follower side pulse YZ (+) phase signal
[*YZ]	YZ (-) phase pulse input terminal	Terminal for inputting follower side pulse YZ (-) phase signal
[U]	U (+) phase pulse input terminal	Terminal for inputting magnetic pole position detection U-phase (+) signal
[*U]	U (-) phase pulse input terminal	Terminal for inputting magnetic pole position detection U-phase (-) signal
[V]	V (+) phase pulse input terminal	Terminal for inputting magnetic pole position detection V-phase (+) signal
[*V]	V (-) phase pulse input terminal	Terminal for inputting magnetic pole position detection V-phase (-) signal
[W]	W (+) phase pulse input terminal	Terminal for inputting magnetic pole position detection W-phase (+) signal
[*W]	W (-) phase pulse input terminal	Terminal for inputting magnetic pole position detection W-phase (-) signal

Note 1) If the total connected PG current consumption exceeds 300 mA, use an external power supply.

Note 2) Use an external power supply to match the allowable voltage range for the PG. Furthermore, adjust the external power supply voltage within the PI voltage range (upper limit +10%) taking the voltage drop caused by wiring impedance into consideration. Or use a wire with thicker coil diameter.

11.20 Multi-function Keypad (TP-A2SW)

Multi-function keypad TP-A2SW is equipped with an LCD screen with backlight, and displays data names and units in Japanese, English, and Chinese. This allows function codes and all internal data to be set and referenced in an easy-to-follow format.

Specifications

Item	Specification	Remarks
Available languages	Support for total of 20 languages including Japanese, English, and Chinese	Korean is supported with keypad ROM5020 or later.
Copy function	Possible to memorize or copy three function data sets.	
USB interface	Type.Mini-B	FRENIC Loader support with Windows® OS
Wireless communication	Bluetooth® Ver.5.0	FRENIC Mobile Loader support with Android OS
microSD card*1	SDHC standard (capacity: max. 32 GB)	Traceback function
Coin battery*1	CR2032	Real-time clock function
Applicable inverter	FRENIC-MEGA (G2) series	Cannot be used for MEGA (G1).
Connection cable	Conforming to ANSI/TIA/EIA568A Category 5 or higher (for 10BASE-T/100BASE-TX straight connection)	Option type: CB-5S, CB-3S, CB-1S
Cable length	20 m (65 ft) or less	
Connector	RJ-45	
Protective construction	Panel side: IP55, reverse side: IP20	
Weight	135 g	

***1: This is not built in as standard, and must be purchased separately.**

External drawings

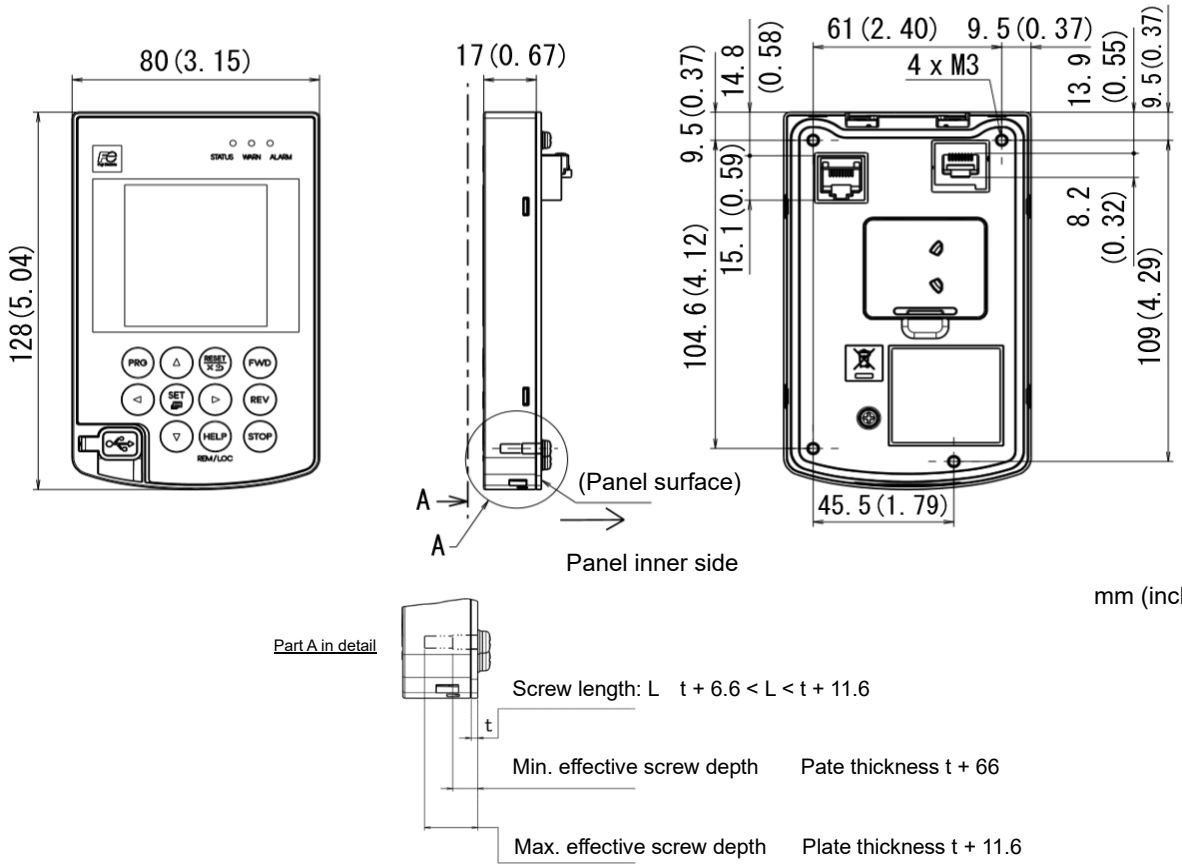

Panel cutting drawing

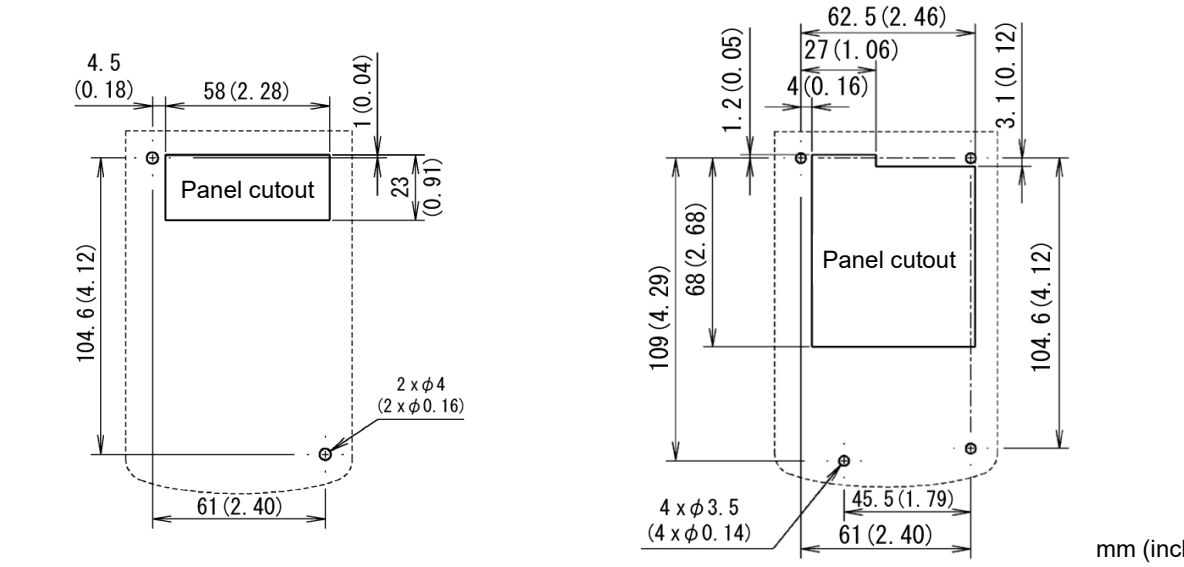

When using previous compatible panel cutting

Waterproof + SD card, when replacing battery

Chapter 12
SPECIFICATIONS

This chapter describes the inverter output ratings.

Contents

12.1 Standard Specifications 1 (Basic Type) ····· 12-1
12.1.1 Three-phase 200V series ····· 12-1
12.1.2 Three-phase 400 V series ····· 12-4
12.2 Standard Specifications 2 (Type with Built-in EMC Filter) ····· 12-11
12.2.1 Three-phase 400V series ····· 12-11
12.3 Common Specifications ····· 12-18

12.1 Standard Specifications 1 (Basic Type)

12.1.1 Three-phase 200V series

■ **HHD specification for Heavy Duty applications**

(0.4 to 90 kW)
(1/2 to 125HP)

Item			Specification																
Type (FRN****G2S-2G)			0003	0005	0008	0011	0018	0032	0046	0059	0075	0088	0115	0146	0180	0215	0288	0346	0432
Standard applicable motor [kW (HP)] (*1) (rated output)			0.4 (1/2)	0.75 (1)	1.5 (2)	2.2 (3)	3.7 (5)	5.5 (7.5)	7.5 (10)	11 (15)	15 (20)	18.5 (25)	22 (30)	30 (40)	37 (50)	45 (60)	55 (75)	75 (100)	90 (125)
Output ratings	Rated capacity [kVA] (*2)		1.1	1.9	3.0	4.1	6.8	10	14	18	24	28	34	45	55	68	81	109	131
	Rated voltage [V] (*3)		Three-phase 200 to 240 V (with AVR function)											Three-phase 200 to 230 V (with AVR function)					
	Rated current [A] (at Ta=50°C(122°F))		3	5	8	11	18	27	37	49	63	76	90	119	146	180	215	288	346
	Overload current rating		150% for 1 min, 200% for 3.0 s																
Input power supply	Voltage, frequency		Three-phase 200 to 240 V, 50/60 Hz											Three-phase 200 to 230 V, 50/60 Hz					
	Permissible voltage, frequency fluctuation		Voltage: +10 to -15% (interphase unbalance ratio: 2% or less) (*4) Frequency: +5 to -5%																
	Rated input current [A] (*8)	with DCR	1.6	3.2	6.1	8.9	15.0	21.1	28.8	42.2	57.6	71.0	84.4	114	138	167	203	282	334
		w/o DCR	3.1	5.3	9.5	13.2	22.2	31.5	42.7	60.7	80.1	97.0	112	151	185	225	270	-	-
	Required capacity (with DCR) [kVA] (*5)		0.6	1.2	2.2	3.1	5.2	7.4	10	15	20	25	30	40	48	58	71	98	116
Braking	Braking torque [%] (*6)		150%		100%					20%				10 to 15%					
	Braking transistor		Built-in															-	
	Minimum connectable resistance value [Ω]		100		40		24	16	12	8.0	6.0	4.0		2.5	2.25	2.0	1.6	-	
	Built-in braking resistor [Ω]		100		40			20		-									
	Braking time [s]		5 s							-									
	Duty cycle [%ED]		5	3	5	3	2	3	2	-									
DC reactor (DCR)			Option															Option (*7)	
Applicable standards			UL 61800-5-1, UL 61800-5-2 SIL3 (Functional Safety : STO), C22.2 No.274-17, IEC/EN 61800-5-1, EN ISO 13849-1 : 2015 Cat.3 / PL:e, EN 60204-1 Stop Category 0, EN 61800-5-2 SIL3 (Functional Safety : STO), EN 62061 SIL3, SEMI F47-0706																
Protective construction (IEC 60529)			Enclosed IP20 type, UL open type											IP00, UL open type IP55 at external side when external cooling installed					
Cooling system			Natural cooling			Fan cooling													
Weight [kg (lbs)]			1.7 (3.6)	1.9 (4.2)	2.6 (5.7)	2.9 (6.3)	2.9 (6.4)	5.8 (13)	6.2 (14)	5.7 (13)	11 (23)	11 (24)	12 (25)	23 (51)	31 (68)	40 (88)	42 (93)	60 (132)	97 (214)

(*1) Fuji 4-pole standard motor

(*2) The rated capacity indicates 220 V for the 200V series, and 440 V for the 400V series.

(*3) It is not possible to output a voltage higher than the power supply voltage.

(*4) Interphase unbalance ratio (%) = Max. voltage [V] - min. voltage [V] / Three-phase average voltage [V] x 67 (See IEC/EN 61800-3)
If using the motor with an unbalance ratio of 2 to 3%, use an AC reactor (ACR: option).

(*5) This indicates the capacity when the motor is equipped with a DC reactor (DCR) (option).

(*6) This is the average braking torque value for the motor on its own. (This will vary based on the motor efficiency.)

(*7) If using motors with output of 75 kW or higher, be sure to use a DC reactor (option).

(*8) This specification is an estimated value to be applied when the power supply capacity is 500 kVA (Inverter capacity × 10 when the capacity exceeds 50 kVA) and the power supply with %X = 5% is connected.

■ HND specification for Normal Duty applications

(7.5 to 110 kW)
(10 to 150HP)

Item			Specification											
Type (FRN****G2S-2G)			0032	0046	0059	0075	0088	0115	0146	0180	0215	0288	0346	0432
Standard applicable motor [kW(HP)] (*1) (rated output)			7.5 (10)	11 (15)	15 (20)	18.5 (25)	22 (30)	30 (40)	37 (50)	45 (60)	55 (75)	75 (100)	90 (125)	110 (150)
Output ratings	Rated capacity [kVA] (*2)		12	17	22	28	33	43	55	68	81	109	131	164
	Rated voltage [V] (*3)		Three-phase 200 to 240 V (with AVR function)						Three-phase 200 to 230 V (with AVR function)					
	Rated current [A] (at Ta=50°C(122°F))		31.8	46.2	59.4	74.8	88	115	146	180	215	288	346	432
	Overload current rating		120% for 1 min											
Input power supply	Voltage, frequency		Three-phase 200 to 240 V, 50/60 Hz						Three-phase 200 to 230 V, 50/60 Hz					
	Permissible voltage, frequency fluctuation		Voltage: +10 to -15% (interphase unbalance ratio: 2% or less) (*4) Frequency: +5 to -5%											
	Rated input current [A] (*8)	with DCR	28.8	42.2	57.6	71	84.4	114	138	167	203	282	334	410
		w/o DCR	42.7	60.7	80.1	97	112	151	185	225	270	-	-	-
	Required capacity (with DCR) [kVA] (*5)		10	15	20	25	30	40	48	58	71	98	116	143
Braking	Braking torque [%] (*6)		70%		15%				7 to 12%					
	Braking transistor		Built-in										-	
	Minimum connectable resistance value [Ω]		16	12	8.0	6.0	4.0		2.5	2.25	2.0	1.6		
	Built-in braking resistor [Ω]		20		-									
		Braking time [s]	3.7 s	3.4 s										
		Duty cycle [%ED]	2.2	1.4	-									
DC reactor (DCR)			Option									Option (*7)		
Applicable standards			UL 61800-5-1, UL 61800-5-2 SIL3 (Functional Safety : STO), C22.2 No.274-17, IEC/EN 61800-5-1, EN ISO 13849-1 : 2015 Cat.3 / PL:e, EN 60204-1 Stop Category 0, EN 61800-5-2 SIL3 (Functional Safety : STO), EN 62061 SIL3, SEMI F47-0706											
Protective construction (IEC 60529)			Enclosed IP20 type, UL open type						IP00, UL open type IP55 at external side when external cooling installed					
Cooling system			Fan cooling											
Weight [kg (lbs)]			5.8 (13)	6.2 (14)	5.7 (13)	11 (23)	11 (24)	12 (25)	23 (51)	31 (68)	40 (88)	42 (93)	60 (132)	97 (214)

(*1) Fuji 4-pole standard motor

(*2) The rated capacity indicates 220 V for the 200V series, and 440 V for the 400V series.

(*3) It is not possible to output a voltage higher than the power supply voltage.

(*4) Interphase unbalance ratio (%) = Max. voltage [V] - min. voltage [V] / Three-phase average voltage [V] x 67 (See IEC/EN 61800-3)
If using the motor with an unbalance ratio of 2 to 3%, use an AC reactor (ACR: option).

(*5) This indicates the capacity when the motor is equipped with a DC reactor (DCR) (option).

(*6) This is the average braking torque value for the motor on its own. (This will vary based on the motor efficiency.)

(*7) If using motors with output of 75 kW or higher, be sure to use a DC reactor (option).

(*8) This specification is an estimated value to be applied when the power supply capacity is 500 kVA (Inverter capacity × 10 when the capacity exceeds 50 kVA) and the power supply with %X = 5% is connected.

12.1.2 Three-phase 400 V series

■ HHD specification for Heavy Duty applications

(0.4 to 55 kW)
(1/2 to 75HP)

Item			Specification														
Type (FRN****G2S-4G)			0002	0003	0004	0006	0009	0018	0023	0035	0041	0045	0060	0085	0105	0139	0179
Standard applicable motor [kW (HP)] (*1) (rated output)			0.4 (1/2)	0.75 (1)	1.5 (2)	2.2 (3)	3.7 (5)	5.5 (7.5)	7.5 (10)	11 (15)	15 (20)	18.5 (25)	22 (30)	30 (40)	37 (50)	45 (60)	55 (75)
Output ratings	Rated capacity [kVA] (*2)		1.1	1.9	3.2	4.5	6.8	10	14	18	24	29	34	45	57	69	85
	Rated voltage [V] (*3)		Three-phase 380 to 480 V (with AVR function)														
	Rated current [A] (at Ta=50°C(122°F))		1.5	2.5	4.2	6.0	9.0	13.5	18.5	24.5	32	39	45	60	75	91	112
	Overload current rating		150% for 1 min, 200% for 3.0 s														
Input power supply	Voltage, frequency		Three-phase 380 to 480 V, 50/60 Hz														
	Permissible voltage, frequency fluctuation		Voltage: +10 to -15% (interphase unbalance ratio: 2% or less) (*4) Frequency: +5 to -5%														
	Rated input current [A] (*8)	with DCR	0.85	1.6	3.0	4.5	7.5	10.6	14.4	21.1	28.8	35.5	42.2	57.0	68.5	83.2	102
		w/o DCR	1.7	3.1	5.9	8.2	13	17.3	23.2	33	43.8	52.3	60.6	77.9	94.3	114	140
	Required capacity (with DCR) [kVA] (*5)		0.6	1.2	2.1	3.2	5.2	7.4	10	15	20	25	30	40	48	58	71
Braking	Torque [%] (*6)		150%		100%					20%				10 to 15%			
	Braking transistor		Built-in														
	Minimum connectable resistance value [Ω]		200		160		96	64	48	32	24	16		10	9.0	8.0	6.5
	Built-in braking resistor [Ω]		720	470	160			80		-							
		Braking time [s]	5 s							-							
		Duty cycle [%ED]	5	3	5	3	2	3	2	-							
DC reactor (DCR)			Option														
Applicable standards			UL 61800-5-1, UL 61800-5-2 SIL3 (Functional Safety : STO), C22.2 No.274-17, IEC/EN 61800-5-1, EN ISO 13849-1 : 2015 Cat.3 / PL:e, EN 60204-1 Stop Category 0, EN 61800-5-2 SIL3 (Functional Safety : STO), EN 62061 SIL3, SEMI F47-0706														
Protective construction (IEC 60529)			Enclosed IP20 type, UL open type											IP00, UL open type IP55 at external side when external cooling installed			
Cooling system			Natural cooling			Fan cooling											
Weight [kg (lbs)]			1.7 (3.7)	2.0 (4.3)	2.6 (5.8)	2.9 (6.4)	3.0 (6.6)	5.9 (13)	6.0 (13)	5.7 (13)	10 (23)	11 (23)	11 (23)	23 (51)	23 (51)	28 (62)	31 (68)

(*1) Fuji 4-pole standard motor

(*2) The rated capacity indicates 220 V for the 200V series, and 440 V for the 400V series.

(*3) It is not possible to output a voltage higher than the power supply voltage.

(*4) Interphase unbalance ratio (%) = Max. voltage [V] - min. voltage [V] / Three-phase average voltage [V] x 67 (See IEC/EN 61800-3)
If using the motor with an unbalance ratio of 2 to 3%, use an AC reactor (ACR: option).

(*5) This indicates the capacity when the motor is equipped with a DC reactor (DCR) (option).

(*6) This is the average braking torque value for the motor on its own. (This will vary based on the motor efficiency.)

(*8) This specification is an estimated value to be applied when the power supply capacity is 500 kVA (Inverter capacity × 10 when the capacity exceeds 50 kVA) and the power supply with %X = 5% is connected.

■ HHD specification for Heavy Duty applications

(75 to 630 kW)
(100 to 900HP)

Item			Specification												
Type (FRN****G2S-4G)			0217	0261	0290	0376	0431	0547	0610	0739	0840	1039	1169	1385	1480
Standard applicable motor [kW (HP)] (*1) (rated output)			75 (100)	90 (125)	110 (150)	132 (200)	160 (250)	200 (300)	220 (350)	280 (400)	315 (450)	355 (500)	400 (600)	500 (800)	630 (900)
Output ratings	Rated capacity [kVA] (*2)		114	137	164	198	247	287	329	396	445	495	563	731	891
	Rated voltage [V] (*3)		Three-phase 380 to 480 V (with AVR function)												
	Rated current [A] (at Ta=50°C(122°F))		150	180	216	260	325	377	432	520	585	650	740	960	1170
	Overload current rating		150% for 1 min, 200% for 3.0 s												
Input power supply	Voltage, frequency		Three-phase 380 to 480 V, 50/60 Hz												
	Permissible voltage, frequency fluctuation		Voltage: +10 to -15% (interphase unbalance ratio: 2% or less) (*4) Frequency: +5 to -5%												
	Rated input current [A] (*8)	with DCR	138	164	201	238	286	357	390	500	559	628	705	881	1115
	Required capacity (with DCR) [kVA] (*5)		96	114	140	165	199	248	271	347	388	436	489	611	773
Braking	Braking torque [%] (*6)		10 to 15%												
	Braking transistor		Built-in	-											
	Minimum connectable resistance value [Ω]		4.7	-											
	Built-in braking resistor		-												
	Braking time [s]														
	Duty cycle [%ED]		-												
DC reactor (DCR)			Option (*7)												
Applicable standards			UL 61800-5-1, UL 61800-5-2 SIL3 (Functional Safety : STO), C22.2 No.274-17, IEC/EN 61800-5-1, EN ISO 13849-1 : 2015 Cat.3 / PL:e, EN 60204-1 Stop Category 0, EN 61800-5-2 SIL3 (Functional Safety : STO), EN 62061 SIL3, SEMI F47-0706												
Protective construction (IEC 60529)			IP00, UL open type IP55 at external side when external cooling installed												
Cooling system			Fan cooling												
Weight [kg (lbs)]			38 (84)	60 (132)	60 (132)	89 (196)	89 (196)	116 (256)	124 (273)	221 (487)	221 (487)	291 (642)	295 (650)	450 (992)	450 (992)

(*1) Fuji 4-pole standard motor

(*2) The rated capacity indicates 220 V for the 200V series, and 440 V for the 400V series.

(*3) It is not possible to output a voltage higher than the power supply voltage.

(*4) Interphase unbalance ratio (%) = Max. voltage [V] - min. voltage [V] / Three-phase average voltage [V] x 67 (See IEC/EN 61800-3)
If using the motor with an unbalance ratio of 2 to 3%, use an AC reactor (ACR: option).

(*5) This indicates the capacity when the motor is equipped with a DC reactor (DCR) (option).

(*6) This is the average braking torque value for the motor on its own. (This will vary based on the motor efficiency.)

(*7) If using motors with output of 75 kW or higher, be sure to use a DC reactor (option).

(*8) This specification is an estimated value to be applied when the power supply capacity is 500 kVA (Inverter capacity × 10 when the capacity exceeds 50 kVA) and the power supply with %X = 5% is connected.

■ HND specification for Normal Duty applications

(7.5 to 110 kW)
(10 to 150HP)

Item			Specification										
Type (FRN****G2S-4G)			0018	0023	0035	0041	0045	0060	0085	0105	0139	0179	0217
Standard applicable motor [kW (HP)] (*1) (rated output)			7.5 (10)	11 (15)	15 (20)	18.5 (25)	22 (30)	30 (40)	37 (50)	45 (60)	55 (75)	75 (100)	110 (150)
Output ratings	Rated capacity [kVA] (*2)		13	17	26	31	34	45	57	69	85	114	165
	Rated voltage [V] (*3)		Three-phase 380 to 480 V (with AVR function)										
	Rated current [A] (at Ta=50°C(122°F))		17.5	23	35	41	45	60	75	91	112	150	217
	Overload current rating		120% for 1 min										
Input power supply	Voltage, frequency		Three-phase 380 to 480 V, 50/60 Hz										
	Permissible voltage, frequency fluctuation		Voltage: +10 to -15% (interphase unbalance ratio: 2% or less) (*4) Frequency: +5 to -5%										
	Rated input current [A] (*8)	with DCR	14.4	21.1	28.8	35.5	42.2	57	68.5	83.2	102	138	201
		w/o DCR	23.2	33	43.8	52.3	60.6	77.9	94.3	114	140	-	-
	Required capacity (with DCR) [kVA] (*5)		10	15	20	25	30	40	48	58	71	96	140
Braking	Braking torque [%] (*6)		70%		15%				7 to 12%				
	Braking transistor		Built-in										
	Minimum connectable resistance value [Ω]		64	48	32	24	16		10	9.0	8.0	6.5	4.7
	Built-in braking resistor [Ω]		80		-								
		Braking time [s]	3.7 s	3.4 s	-								
		Duty cycle [%ED]	2.2	1.4	-								
DC reactor (DCR)			Option									Option (*7)	
Applicable standards			UL 61800-5-1, UL 61800-5-2 SIL3 (Functional Safety : STO), C22.2 No.274-17, IEC/EN 61800-5-1, EN ISO 13849-1 : 2015 Cat.3 / PL:e, EN 60204-1 Stop Category 0, EN 61800-5-2 SIL3 (Functional Safety : STO), EN 62061 SIL3, SEMI F47-0706										
Protective construction (IEC 60529)			Enclosed IP20 type, UL open type						IP00, UL open type IP55 at external side when external cooling installed				
Cooling system			Fan cooling										
Weight [kg (lbs)]			5.9 (13)	6.0 (13)	5.7 (13)	10 (23)	11 (23)	11 (23)	23 (51)	23 (51)	28 (62)	31 (63)	38 (84)

(*1) Fuji 4-pole standard motor

(*2) The rated capacity indicates 220 V for the 200V series, and 440 V for the 400V series.

(*3) It is not possible to output a voltage higher than the power supply voltage.

(*4) Interphase unbalance ratio (%) = Max. voltage [V] - min. voltage [V] / Three-phase average voltage [V] x 67 (See IEC/EN 61800-3)
If using the motor with an unbalance ratio of 2 to 3%, use an AC reactor (ACR: option).

(*5) This indicates the capacity when the motor is equipped with a DC reactor (DCR) (option).

(*6) This is the average braking torque value for the motor on its own. (This will vary based on the motor efficiency.)

(*7) If using motors with output of 75 kW or higher, be sure to use a DC reactor (option).

(*8) This specification is an estimated value to be applied when the power supply capacity is 500 kVA (Inverter capacity × 10 when the capacity exceeds 50 kVA) and the power supply with %X = 5% is connected.

■ HND specification for Normal Duty applications

(132 to 710 kW)
(200 to 1200HP)

Item			Specification											
Type (FRN****G2S-4G)			0261	0290	0376	0431	0547	0610	0739	0840	1039	1169	1385	1480
Standard applicable motor [kW (HP)] (*1) (rated output)			132 (200)	160 (200)	200 (300)	220 (350)	280 (450)	315 (500)	355 (500)	400 (600)	500 (800)	560 (900)	630 (900)	710 (1200)
Output ratings	Rated capacity [kVA] (*2)		198	221	275	316	416	464	495	563	731	792	891	1056
	Rated voltage [V] (*3)		Three-phase 380 to 480 V (with AVR function)											
	Rated current [A] (at Ta=50°C(122°F))		261	290	361	415	547	610	650	740	960	1040	1170	1386
	Overload current rating		120%											
Input power supply	Voltage, frequency		Three-phase 380 to 480 V, 50/60 Hz											
	Permissible voltage, frequency fluctuation		Voltage: +10 to -15% (interphase unbalance ratio: 2% or less) (*4) Frequency: +5 to -5%											
	Rated input current [A] (*8)	with DCR	238	286	357	390	500	559	628	705	881	990	1115	1256
	Required capacity (with DCR) [kVA] (*5)		165	199	248	271	347	388	436	489	611	686	773	871
Braking	Braking torque [%] (*6)		7 to 12%											
	Braking transistor		-											
	Built-in braking resistor		-											
	Braking time [s]													
	Duty cycle [%ED]		-											
DC reactor (DCR)			Option (*7)											
Applicable standards			UL 61800-5-1, UL 61800-5-2 SIL3 (Functional Safety : STO), C22.2 No.274-17, IEC/EN 61800-5-1, EN ISO 13849-1 : 2015 Cat.3 / PL:e, EN 60204-1 Stop Category 0, EN 61800-5-2 SIL3 (Functional Safety : STO), EN 62061 SIL3, SEMI F47-0706											
Protective construction (IEC 60529)			IP00, UL open type IP55 at external side when external cooling installed											
Cooling system			Fan cooling											
Weight [kg (lbs)]			60 (132)	60 (132)	89 (196)	89 (196)	116 (256)	124 (273)	221 (487)	221 (487)	291 (642)	295 (650)	450 (992)	450 (992)

(*1) Fuji 4-pole standard motor

(*2) The rated capacity indicates 220 V for the 200V series, and 440 V for the 400V series.

(*3) It is not possible to output a voltage higher than the power supply voltage.

(*4) Interphase unbalance ratio (%) = Max. voltage [V] - min. voltage [V] / Three-phase average voltage [V] x 67 (See IEC/EN 61800-3)
If using the motor with an unbalance ratio of 2 to 3%, use an AC reactor (ACR: option).

(*5) This indicates the capacity when the motor is equipped with a DC reactor (DCR) (option).

(*6) This is the average braking torque value for the motor on its own. (This will vary based on the motor efficiency.)

(*7) If using motors with output of 75 kW or higher, be sure to use a DC reactor (option).

(*8) This specification is an estimated value to be applied when the power supply capacity is 500 kVA (Inverter capacity × 10 when the capacity exceeds 50 kVA) and the power supply with %X = 5% is connected.

■ **HD specification for Heavy Duty applications (Supported with ROM0600 or later.)**

Item			Specification																
Type (FRN***G2S-4G)			0085	0105	0139	0179	0217	0261	0290	0376	0431	0547	0610	0739	0840	1039	1169	1385	1480
Standard applicable motor [kW (HP)] (*1) (rated output)			37 (50)	45 (60)	55 (75)	75 (100)	90 (150)	110 (150)	132 (200)	160 (250)	200 (300)	220 (350)	250 (400)	315 (450)	355 (500)	400 (600)	450 (700)	560 (900)	710 (1200)
Output ratings	Rated capacity [kVA] (*2)		57	69	85	114	137	165	198	247	287	329	363	445	495	563	640	792	1056
	Rated voltage [V] (*3)		Three-phase 380 to 480 V (with AVR function)																
	Rated current [A] (at Ta=40°C(104°F))		75	91	112	150	180	217	261	325	377	432	477	585	650	740	840	1040	1386
	Overload current rating		150% for 1 min																
Input power supply	Voltage, frequency		Three-phase 380 to 480 V, 50/60 Hz																
	Permissible voltage, frequency fluctuation		Voltage: +10 to -15% (interphase unbalance ratio: 2% or less) (*4) Frequency: +5 to -5%																
	Rated input current [A] (*8)	with DCR	68.5	83.2	102	138	164	201	238	286	357	390	443	559	628	705	789	990	1256
		w/o DCR	94.3	114	140	--													
	Required capacity (with DCR) [kVA] (*5)		48	58	71	96	114	140	165	199	248	271	307	388	436	489	547	686	871
Braking	Braking torque [%] (*6)		7 to 12%																
	Braking transistor		Built-in					--											
	Minimum connectable resistance value [Ω]		10	9.0	8.0	6.5	4.7	--											
	Built-in braking resistor [Ω]		--																
DC reactor (DCR)			Option			Option (*7)													
Applicable standards			UL 61800-5-1, UL 61800-5-2 SIL3 (Functional Safety : STO), C22.2 No.274-17, IEC/EN 61800-5-1, EN ISO 13849-1 : 2015 Cat.3 / PL:e, EN 60204-1 Stop Category 0, EN 61800-5-2 SIL3 (Functional Safety : STO), EN 62061 SIL3, SEMI F47-0706																
Protective construction (IEC 60529)			IP00, UL open type IP55 at external side when external cooling installed																
Cooling system			Fan cooling																
Weight [kg (lbs)]			23 (51)	23 (51)	28 (62)	31 (63)	38 (84)	60 (132)	60 (132)	89 (196)	89 (196)	116 (256)	124 (273)	221 (487)	221 (487)	291 (642)	295 (650)	450 (992)	450 (992)

(*1) Fuji 4-pole standard motor

(*2) The rated capacity indicates 220 V for the 200V series, and 440 V for the 400V series.

(*3) It is not possible to output a voltage higher than the power supply voltage.

(*4) Interphase unbalance ratio (%) = Max. voltage [V] - min. voltage [V] / Three-phase average voltage [V] x 67 (See IEC/EN 61800-3)
If using the motor with an unbalance ratio of 2 to 3%, use an AC reactor (ACR: option).

(*5) This indicates the capacity when the motor is equipped with a DC reactor (DCR) (option).

(*6) This is the average braking torque value for the motor on its own. (This will vary based on the motor efficiency.)

(*7) If using motors with output of 75 kW or higher, be sure to use a DC reactor (option).

(*8) This specification is an estimated value to be applied when the power supply capacity is 500 kVA (Inverter capacity × 10 when the capacity exceeds 50 kVA) and the power supply with %X = 5% is connected.

■ **ND specification for Normal Duty applications (Supported with ROM0600 or later.)**

Item			Specification																
Type (FRN***G2S-4G)			0085	0105	0139	0179	0217	0261	0290	0376	0431	0547	0610	0739	0840	1039	1169	1385	1480
Standard applicable motor [kW (HP)] (*1) (rated output)			45 (60)	55 (75)	75 (100)	90 (125)	110 (150)	132 (200)	160 (200)	200 (300)	220 (350)	280 (450)	315 (500)	400 (600)	450 (700)	560 (900)	630 (900)	710 (1200)	800 (1300)
Output ratings	Rated capacity [kVA] (*2)		64	80	105	136	165	198	221	286	328	416	464	563	640	791	890	1055	1127
	Rated voltage [V] (*3)		Three-phase 380 to 480 V (with AVR function)																
	Rated current [A] (at Ta=40°C(104°F))		85	105	139	179	217	261	290	376	431	547	610	739	840	1039	1169	1385	1480
	Overload current rating		120% for 1 min																
Input power supply	Voltage, frequency		Three-phase 380 to 480 V, 50/60 Hz																
	Permissible voltage, frequency fluctuation		Voltage: +10 to -15% (interphase unbalance ratio: 2% or less) (*4) Frequency: +5 to -5%																
	Rated input current [A] (*8)	with DCR	83.2	102	138	164	201	238	286	357	390	500	559	705	789	990	1115	1256	1415
		w/o DCR	114	140	--														
	Required capacity (with DCR) [kVA] (*5)		58	71	96	114	140	165	199	248	271	347	388	489	547	686	773	871	981
Braking	Braking torque [%] (*6)		7 to 12%																
	Braking transistor		Built-in					--											
	Minimum connectable resistance value [Ω]		10	9.0	8.0	6.5	4.7	--											
	Built-in braking resistor [Ω]		--																
DC reactor (DCR)			Option		Option (*7)														
Applicable standards			UL 61800-5-1, UL 61800-5-2 SIL3 (Functional Safety : STO), C22.2 No.274-17, IEC/EN 61800-5-1, EN ISO 13849-1 : 2015 Cat.3 / PL:e, EN 60204-1 Stop Category 0, EN 61800-5-2 SIL3 (Functional Safety : STO), EN 62061 SIL3, SEMI F47-0706																
Protective construction (IEC 60529)			IP00, UL open type IP55 at external side when external cooling installed																
Cooling system			Fan cooling																
Weight [kg (lbs)]			23 (51)	23 (51)	28 (62)	31 (63)	38 (84)	60 (132)	60 (132)	89 (196)	89 (196)	116 (256)	124 (273)	221 (487)	221 (487)	291 (642)	295 (650)	450 (992)	450 (992)

(*1) Fuji 4-pole standard motor

(*2) The rated capacity indicates 220 V for the 200V series, and 440 V for the 400V series.

(*3) It is not possible to output a voltage higher than the power supply voltage.

(*4) Interphase unbalance ratio (%) = Max. voltage [V] - min. voltage [V] / Three-phase average voltage [V] x 67 (See IEC/EN 61800-3)
If using the motor with an unbalance ratio of 2 to 3%, use an AC reactor (ACR: option).

(*5) This indicates the capacity when the motor is equipped with a DC reactor (DCR) (option).

(*6) This is the average braking torque value for the motor on its own. (This will vary based on the motor efficiency.)

(*7) If using motors with output of 75 kW or higher, be sure to use a DC reactor (option).

(*8) This specification is an estimated value to be applied when the power supply capacity is 500 kVA (Inverter capacity × 10 when the capacity exceeds 50 kVA) and the power supply with %X = 5% is connected.

12.2 Standard Specifications 2 (Type with Built-in EMC Filter)

12.2.1 Three-phase 400V series

■ **HHD specification for High, Heavy Duty applications**

(0.4 to 55 kW)
(1/2 to 75HP)

Item			Specification														
Type (FRN****G2E-4G)			0002	0003	0004	0006	0009	0018	0023	0035	0041	0045	0060	0085	0105	0139	0179
Standard applicable motor [kW (HP)] (*1) (rated output)			0.4 (1/2)	0.75 (1)	1.5 (2)	2.2 (3)	3.7 (5)	5.5 (7.5)	7.5 (10)	11 (15)	15 (20)	18.5 (25)	22 (30)	30 (40)	37 (50)	45 (60)	55 (75)
Output ratings	Rated capacity [kVA] (*2)		1.1	1.9	3.2	4.5	6.8	10	14	18	24	29	34	45	57	69	85
	Rated voltage [V] (*3)		Three-phase 380 to 480 V (with AVR function)														
	Rated current [A] (at Ta=50°C(122°F))		1.5	2.5	4.2	6.0	9.0	13.5	18.5	24.5	32	39	45	60	75	91	112
	Overload current rating		150% for 1 min, 200% for 3.0 s														
Input power supply	Voltage, frequency		Three-phase 380 to 480 V, 50/60 Hz														
	Permissible voltage, frequency fluctuation		Voltage: +10 to -15% (interphase unbalance ratio: 2% or less) (*4) Frequency: +5 to -5%														
	Rated input current [A] (*8)	with DCR	0.85	1.6	3.0	4.5	7.5	10.6	14.4	21.1	28.8	35.5	42.2	57.0	68.5	83.2	102
		w/o DCR	1.7	3.1	5.9	8.2	13	17.3	23.2	33	43.8	52.3	60.6	77.9	94.3	114	140
	Required capacity (with DCR) [kVA] (*5)		0.6	1.2	2.1	3.2	5.2	7.4	10	15	20	25	30	40	48	58	71
Braking	Braking torque [%] (*6)		150%		100%					20%			10 to 15%				
	Braking transistor		Built-in														
	Minimum connectable resistance value [Ω]		200		160		96	64	48	32	24	16		10	9.0	8.0	6.5
	Built-in braking resistor [Ω]		720	470	160			80		-							
		Braking time [s]	5 s							-							
		Duty cycle [%ED]	5	3	5	3	2	3	2	-							
EMC filter			Complying EMC standard on emissions and immunity: Category C3 (2nd Env.) (IEC61800-3)														
DC reactor (DCR)			Option														
Applicable standards			UL 61800-5-1, UL 61800-5-2 SIL3 (Functional Safety : STO), C22.2 No.274-17, IEC/EN 61800-5-1, EN ISO 13849-1 : 2015 Cat.3 / PL:e, EN 60204-1 Stop Category 0, EN 61800-5-2 SIL3 (Functional Safety : STO), EN 62061 SIL3, SEMI F47-0706														
Protective construction (IEC 60529)			Enclosed IP20 type, UL open type											IP00, UL open type IP55 at external side when external cooling installed			
Cooling system			Natural cooling			Fan cooling											
Weight [kg (lbs)]			1.8 (3.9)	2.1 (4.5)	2.8 (6.1)	3.1 (6.8)	3.2 (6.9)	6.6 (15)	6.6 (15)	6.4 (14)	11 (25)	11 (25)	12 (25)	23 (51)	23 (51)	30 (66)	31 (68)

(*1) Fuji 4-pole standard motor

(*2) The rated capacity indicates 220 V for the 200V series, and 440 V for the 400V series.

(*3) It is not possible to output a voltage higher than the power supply voltage.

(*4) Interphase unbalance ratio (%) = Max. voltage [V] - min. voltage [V] / Three-phase average voltage [V] x 67 (See IEC/EN 61800-3)
If using the motor with an unbalance ratio of 2 to 3%, use an AC reactor (ACR: option).

(*5) This indicates the capacity when the motor is equipped with a DC reactor (DCR).

(*6) This is the average braking torque value for the motor on its own. (This will vary based on the motor efficiency.)

(*8) This specification is an estimated value to be applied when the power supply capacity is 500 kVA (Inverter capacity × 10 when the capacity exceeds 50 kVA) and the power supply with %X = 5% is connected.

■ HHD specification for Normal Duty applications

(75 to 630 kW)
(100 to 900HP)

Item		Specification												
Type (FRN****G2E-4G)		0217	0261	0290	0376	0431	0547	0610	0739	0840	1039	1169	1385	1480
Standard applicable motor [kW (HP)] (*1) (rated output)		75 (100)	90 (125)	110 (150)	132 (200)	160 (250)	200 (300)	220 (350)	280 (400)	315 (450)	355 (500)	400 (600)	500 (800)	630 (900)
Output ratings	Rated capacity [kVA] (*2)	114	137	164	198	247	287	329	396	445	495	563	731	891
	Rated voltage [V (*3)	Three-phase 380 to 480 V (with AVR function)												
	Rated current [A] (at Ta=50°C(122°F))	150	180	216	260	325	377	432	520	585	650	740	960	1170
	Overload current rating	150% for 1 min, 200% for 3.0 s												
Input power supply	Voltage, frequency	Three-phase 380 to 480 V, 50/60 Hz												
	Permissible voltage, frequency fluctuation	Voltage: +10 to -15% (interphase unbalance ratio: 2% or less) (*4) Frequency: +5 to -5%												
	Rated input current [A] (*8) with DCR	138	164	201	238	286	357	390	500	559	628	705	881	1115
	Required capacity (with DCR) [kVA] (*5)	96	114	140	165	199	248	271	347	388	436	489	611	773
Braking	Braking torque [%] (*6)	10 to 15%												
	Braking transistor	Build in	-											
	Minimum connectable resistance value [Ω]	4.7	-											
	Built-in braking resistor	-												
	Braking time [s]													
	Duty cycle [%ED]	-												
EMC filter		Complying EMC standard on emissions and immunity: Category C3 (2nd Env.) (IEC61800-3)												
DC reactor (DCR)		Option (*7)												
Applicable standards		UL 61800-5-1, UL 61800-5-2 SIL3 (Functional Safety : STO), C22.2 No.274-17, IEC/EN 61800-5-1, EN ISO 13849-1 : 2015 Cat.3 / PL:e, EN 60204-1 Stop Category 0, EN 61800-5-2 SIL3 (Functional Safety : STO), EN 62061 SIL3, SEMI F47-0706												
Protective construction (IEC 60529)		IP00, UL open type IP55 at external side when external cooling installed												
Cooling system		Fan cooling												
Weight [kg (lbs)]		38 (84)	60 (132)	60 (132)	89 (196)	89 (196)	116 (256)	124 (273)	221 (487)	221 (487)	291 (642)	295 (650)	450 (992)	450 (992)

(*1) Fuji 4-pole standard motor

(*2) The rated capacity indicates 220 V for the 200V series, and 440 V for the 400V series.

(*3) It is not possible to output a voltage higher than the power supply voltage.

(*4) Interphase unbalance ratio (%) = Max. voltage [V] - min. voltage [V] / Three-phase average voltage [V] x 67 (See IEC/EN 61800-3)
If using the motor with an unbalance ratio of 2 to 3%, use an AC reactor (ACR: option).

(*5) This indicates the capacity when the motor is equipped with a DC reactor (DCR).

(*6) This is the average braking torque value for the motor on its own. (This will vary based on the motor efficiency.)

(*7) If using motors with output of 75 kW or higher, be sure to use a DC reactor (option).

(*8) This specification is an estimated value to be applied when the power supply capacity is 500 kVA (Inverter capacity × 10 when the capacity exceeds 50 kVA) and the power supply with %X = 5% is connected.

■ HND specification for Normal Duty applications

(7.5 to 110 kW)
(10 to 150HP)

Item			Specification										
Type (FRN****G2E-4G)			0018	0023	0035	0041	0045	0060	0085	0105	0139	0179	0217
Standard applicable motor [kW (HP)] (*1) (rated output)			7.5 (10)	11 (15)	15 (20)	18.5 (25)	22 (30)	30 (40)	37 (50)	45 (60)	55 (75)	75 (100)	110 (150)
Output ratings	Rated capacity [kVA] (*2)		13	17	26	31	34	45	57	69	85	114	165
	Rated voltage [V] (*3)		Three-phase 380 to 480 V (with AVR function)										
	Rated current [A] (at Ta=50°C(122°F))		17.5	23	35	41	45	60	75	91	112	150	217
	Overload current rating		120% for 1 min										
Input power supply	Voltage, frequency		Three-phase 380 to 480 V, 50/60 Hz										
	Permissible voltage, frequency fluctuation		Voltage: +10 to -15% (interphase unbalance ratio: 2% or less) (*4) Frequency: +5 to -5%										
	Rated input current [A] (*8)	with DCR	14.4	21.1	28.8	35.5	42.2	57	68.5	83.2	102	138	201
		w/o DCR	23.2	33	43.8	52.3	60.6	77.9	94.3	114	140	-	-
	Required capacity (with DCR) [kVA] (*5)		10	15	20	25	30	40	48	58	71	96	140
Braking	Braking torque [%] (*6)		70%		15%				7 to 12%				
	Braking transistor		Built-in										
	Minimum connectable resistance value [Ω]		64	48	32	24	16		10	9.0	8.0	6.5	4.7
	Built-in braking resistor [Ω]		80		-								
		Braking time [s]	3.7 s	3.4 s	-								
		Duty cycle [%ED]	2.2	1.4	-								
EMC filter			Complying EMC standard on emissions and immunity: Category C3 (2nd Env.) (IEC61800-3)										
DC reactor (DCR)			Option										Option (*7)
Applicable standards			UL 61800-5-1, UL 61800-5-2 SIL3 (Functional Safety : STO), C22.2 No.274-17, IEC/EN 61800-5-1, EN ISO 13849-1 : 2015 Cat.3 / PL:e, EN 60204-1 Stop Category 0, EN 61800-5-2 SIL3 (Functional Safety : STO), EN 62061 SIL3, SEMI F47-0706										
Protective construction (IEC 60529)			Enclosed P20 type, UL open type						IP00, UL open type IP55 at external side when external cooling installed				
Cooling system			Fan cooling										
Weight [kg (lbs)]			6.6 (15)	6.6 (15)	6.4 (14)	11 (25)	11 (25)	12 (25)	23 (51)	23 (51)	30 (66)	31 (68)	38 (84)

(*1) Fuji 4-pole standard motor

(*2) The rated capacity indicates 220 V for the 200V series, and 440 V for the 400V series.

(*3) It is not possible to output a voltage higher than the power supply voltage.

(*4) Interphase unbalance ratio (%) = Max. voltage [V] - min. voltage [V] / Three-phase average voltage [V] x 67 (See IEC/EN 61800-3)
If using the motor with an unbalance ratio of 2 to 3%, use an AC reactor (ACR: option).

(*5) This indicates the capacity when the motor is equipped with a DC reactor (DCR) (option).

(*6) This is the average braking torque value for the motor on its own. (This will vary based on the motor efficiency.)

(*7) If using motors with output of 75 kW or higher, be sure to use a DC reactor (option).

(*8) This specification is an estimated value to be applied when the power supply capacity is 500 kVA (Inverter capacity × 10 when the capacity exceeds 50 kVA) and the power supply with %X = 5% is connected.

■ HND specification for Normal Duty applications

(132 to 710 kW)
(200 to 1200HP)

Item			Specification											
Type (FRN****G2E-4G)			0261	0290	0376	0431	0547	0610	0739	0840	1039	1169	1385	1480
Standard applicable motor [kW (HP)] (*1) (rated output)			132 (200)	160 (200)	200 (300)	220 (350)	280 (450)	315 (500)	355 (500)	400 (600)	500 (800)	560 (900)	630 (900)	710 (1200)
Output ratings	Rated capacity [kVA] (*2)		198	221	275	316	416	464	495	563	731	792	891	1056
	Rated voltage [V] (*3)		Three-phase 380 to 480 V (with AVR function)											
	Rated current [A] (at Ta=50°C(122°F))		216	260	325	377	432	520	650	740	960	1040	1170	1386
	Overload current rating		120% for 1 min											
Input power supply	Voltage, frequency		Three-phase 380 to 480 V, 50/60 Hz											
	Permissible voltage, frequency fluctuation		Voltage: +10 to -15% (interphase unbalance ratio: 2% or less) (*4) Frequency: +5 to -5%											
	Rated input current [A] (*8)	with DCR	238	286	357	390	500	559	628	705	881	990	1115	1256
	Required capacity (with DCR) [kVA] (*5)		165	199	248	271	347	388	436	489	611	686	773	871
Braking	Braking torque [%] (*6)		7 to 12%											
	Braking transistor		-											
	Built-in braking resistor		-											
	Braking time [s]													
	Duty cycle [%ED]		-											
EMC filter			Complying EMC standard on emissions and immunity: Category C3 (2nd Env.) (IEC61800-3)											
DC reactor (DCR)			Option (*7)											
Applicable standards			UL 61800-5-1, UL 61800-5-2 SIL3 (Functional Safety : STO), C22.2 No.274-17, IEC/EN 61800-5-1, EN ISO 13849-1 : 2015 Cat.3 / PL:e, EN 60204-1 Stop Category 0, EN 61800-5-2 SIL3 (Functional Safety : STO), EN 62061 SIL3, SEMI F47-0706											
Protective construction (IEC 60529)			IP00, UL open type IP55 at external side when external cooling installed											
Cooling system			Fan cooling											
Weight [kg (lbs)]			60 (132)	60 (132)	89 (196)	89 (196)	116 (256)	124 (273)	221 (487)	221 (487)	291 (642)	295 (650)	450 (992)	450 (992)

(*1) Fuji 4-pole standard motor

(*2) The rated capacity indicates 220 V for the 200V series, and 440 V for the 400V series.

(*3) It is not possible to output a voltage higher than the power supply voltage.

(*4) Interphase unbalance ratio (%) = Max. voltage [V] - min. voltage [V] / Three-phase average voltage [V] x 67 (See IEC/EN 61800-3)
If using the motor with an unbalance ratio of 2 to 3%, use an AC reactor (ACR: option).

(*5) This indicates the capacity when the motor is equipped with a DC reactor (DCR) (option).

(*6) This is the average braking torque value for the motor on its own. (This will vary based on the motor efficiency.)

(*7) If using motors with output of 75 kW or higher, be sure to use a DC reactor (option).

(*8) This specification is an estimated value to be applied when the power supply capacity is 500 kVA (Inverter capacity × 10 when the capacity exceeds 50 kVA) and the power supply with %X = 5% is connected.

■ **HD specification for Normal Duty applications (Supported with ROM0600 or later.)**

Item			Specification																
Type (FRN***G2E-4G)			0085	0105	0139	0179	0217	0261	0290	0376	0431	0547	0610	0739	0840	1039	1169	1385	1480
Standard applicable motor [kW (HP)] (*1) (rated output)			37 (50)	45 (60)	55 (75)	75 (100)	90 (150)	110 (150)	132 (200)	160 (250)	200 (300)	220 (350)	250 (400)	315 (450)	355 (500)	400 (600)	450 (700)	560 (900)	710 (1200)
Output ratings	Rated capacity [kVA] (*2)		57	69	85	114	137	165	198	247	287	329	363	445	495	563	640	792	1056
	Rated voltage [V] (*3)		Three-phase 380 to 480 V (with AVR function)																
	Rated current [A] (at Ta=40°C(104°F))		75	91	112	150	180	217	261	325	377	432	477	585	650	740	840	1040	1386
	Overload current rating		150% for 1 min																
Input power supply	Voltage, frequency		Three-phase 380 to 480 V, 50/60 Hz																
	Permissible voltage, frequency fluctuation		Voltage: +10 to -15% (interphase unbalance ratio: 2% or less) (*4) Frequency: +5 to -5%																
	Rated input current [A] (*8)	with DCR	68.5	83.2	102	138	164	201	238	286	357	390	443	559	628	705	789	990	1256
		w/o DCR	94.3	114	140	--													
	Required capacity (with DCR) [kVA] (*5)		48	58	71	96	114	140	165	199	248	271	307	388	436	489	547	686	871
Braking	Braking torque [%] (*6)		7 to 12%																
	Braking transistor		Built-in					--											
	Minimum connectable resistance value [Ω]		10	9.0	8.0	6.5	4.7	--											
	Built-in braking resistor [Ω]		--																
EMC filter			Complying EMC standard on emissions and immunity: Category C3 (2nd Env.) (IEC61800-3)																
DC reactor (DCR)			Option			Option (*7)													
Applicable standards			UL 61800-5-1, UL 61800-5-2 SIL3 (Functional Safety : STO), C22.2 No.274-17, IEC/EN 61800-5-1, EN ISO 13849-1 : 2015 Cat.3 / PL:e, EN 60204-1 Stop Category 0, EN 61800-5-2 SIL3 (Functional Safety : STO), EN 62061 SIL3, SEMI F47-0706																
Protective construction (IEC 60529)			IP00, UL open type IP55 at external side when external cooling installed																
Cooling system			Fan cooling																
Weight [kg (lbs)]			23 (51)	23 (51)	28 (62)	31 (63)	38 (84)	60 (132)	60 (132)	89 (196)	89 (196)	116 (256)	124 (273)	221 (487)	221 (487)	291 (642)	295 (650)	450 (992)	450 (992)

(*1) Fuji 4-pole standard motor

(*2) The rated capacity indicates 220 V for the 200V series, and 440 V for the 400V series.

(*3) It is not possible to output a voltage higher than the power supply voltage.

(*4) Interphase unbalance ratio (%) = Max. voltage [V] - min. voltage [V] / Three-phase average voltage [V] x 67 (See IEC/EN 61800-3)
If using the motor with an unbalance ratio of 2 to 3%, use an AC reactor (ACR: option).

(*5) This indicates the capacity when the motor is equipped with a DC reactor (DCR) (option).

(*6) This is the average braking torque value for the motor on its own. (This will vary based on the motor efficiency.)

(*7) If using motors with output of 75 kW or higher, be sure to use a DC reactor (option).

(*8) This specification is an estimated value to be applied when the power supply capacity is 500 kVA (Inverter capacity × 10 when the capacity exceeds 50 kVA) and the power supply with %X = 5% is connected.

■ ND specification for Normal Duty applications (Supported with ROM0600 or later.)

Item			Specification																
Type (FRN***G2E-4G)			0085	0105	0139	0179	0217	0261	0290	0376	0431	0547	0610	0739	0840	1039	1169	1385	1480
Standard applicable motor [kW (HP)] (*1) (rated output)			45 (60)	55 (75)	75 (100)	90 (125)	110 (150)	132 (200)	160 (200)	200 (300)	220 (350)	280 (450)	315 (500)	400 (600)	450 (700)	560 (900)	630 (900)	710 (1200)	800 (1300)
Output ratings	Rated capacity [kVA] (*2)		64	80	105	136	165	198	221	286	328	416	464	563	640	791	890	1055	1127
	Rated voltage [V] (*3)		Three-phase 380 to 480 V (with AVR function)																
	Rated current [A] (at Ta=40°C(104°F))		85	105	139	179	217	261	290	376	431	547	610	739	840	1039	1169	1385	1480
	Overload current rating		120% for 1 min																
Input power supply	Voltage, frequency		Three-phase 380 to 480 V, 50/60 Hz																
	Permissible voltage, frequency fluctuation		Voltage: +10 to -15% (interphase unbalance ratio: 2% or less) (*4) Frequency: +5 to -5%																
	Rated input current [A] (*8)	with DCR	83.2	102	138	164	201	238	286	357	390	500	559	705	789	990	1115	1256	1415
		w/o DCR	114	140	--														
	Required capacity (with DCR) [kVA] (*5)		58	71	96	114	140	165	199	248	271	347	388	489	547	686	773	871	981
Braking	Braking torque [%] (*6)		7 to 12%																
	Braking transistor		Built-in					--											
	Minimum connectable resistance value [Ω]		10	9.0	8.0	6.5	4.7	--											
	Built-in braking resistor [Ω]		--																
EMC filter			Complying EMC standard on emissions and immunity: Category C3 (2nd Env.) (IEC61800-3)																
DC reactor (DCR)			Option		Option (*7)														
Applicable standards			UL 61800-5-1, UL 61800-5-2 SIL3 (Functional Safety : STO), C22.2 No.274-17, IEC/EN 61800-5-1, EN ISO 13849-1 : 2015 Cat.3 / PL:e, EN 60204-1 Stop Category 0, EN 61800-5-2 SIL3 (Functional Safety : STO), EN 62061 SIL3, SEMI F47-0706																
Protective construction (IEC 60529)			IP00, UL open type IP55 at external side when external cooling installed																
Cooling system			Fan cooling																
Weight [kg (lbs)]			23 (51)	23 (51)	28 (62)	31 (63)	38 (84)	60 (132)	60 (132)	89 (196)	89 (196)	116 (256)	124 (273)	221 (487)	221 (487)	291 (642)	295 (650)	450 (992)	450 (992)

(*1) Fuji 4-pole standard motor

(*2) The rated capacity indicates 220 V for the 200V series, and 440 V for the 400V series.

(*3) It is not possible to output a voltage higher than the power supply voltage.

(*4) Interphase unbalance ratio (%) = Max. voltage [V] - min. voltage [V] / Three-phase average voltage [V] x 67 (See IEC/EN 61800-3)
If using the motor with an unbalance ratio of 2 to 3%, use an AC reactor (ACR: option).

(*5) This indicates the capacity when the motor is equipped with a DC reactor (DCR) (option).

(*6) This is the average braking torque value for the motor on its own. (This will vary based on the motor efficiency.)

(*7) If using motors with output of 75 kW or higher, be sure to use a DC reactor (option).

(*8) This specification is an estimated value to be applied when the power supply capacity is 500 kVA (Inverter capacity × 10 when the capacity exceeds 50 kVA) and the power supply with %X = 5% is connected.

12.3 Common Specifications

Table 12.3-1

Item			Explanation		Remarks
Output	Adjustment	Maximum output frequency	5 to 599 Hz variable setting		
		Base frequency	5 to 599 Hz variable setting		
		Number of motor poles setting	2 to 128 poles		
		Starting frequency	0.1 to 60.0 Hz variable setting (0.0 Hz when performing sensorless vector control/vector control with sensor)		
		Carrier frequency	· 0.75 to 16 kHz variable setting (HHD specification: FRN0003G2S-2G to FRN0288G2S-2G/ FRN0002G2■-4G to FRN0179G2■-4G) (HND specification: FRN0032G2S-2G to FRN0088G2S-2G/ FRN0018G2■-4G to FRN0045G2■-4G) · 0.75 to 10 kHz variable setting (HHD specification: FRN0346G2S-2G to FRN0432G2S-2G/ FRN0217G2■-4G to FRN1480G2■-4G) (HND specification: FRN0115G2S-2G to FRN0288G2S-2G/ FRN0060G2■-4G to FRN0179G2■-4G) (HD specification: FRN0085G2■-4G to FRN0179G2■-4G) · 0.75 to 6 kHz variable setting (HND specification: FRN0346G2S-2G to FRN0432G2S-2G/ FRN0217G2■-4G to FRN1480G2■-4G) (HD specification: FRN0217G2■-4G to FRN1480G2■-4G) (ND specification: FRN0085G2■-4G to FRN1480G2■-4G) Note: The carrier frequency may automatically lower depending upon the ambient temperature or the output current to protect the inverter. (The automatic lowering function can be disabled.)		
	Output frequency accuracy		· Analog setting: ±0.2% of maximum output frequency (at 25 ±10 °C) (77 ±18 °F) · Keypad setting: ±0.01% of maximum output frequency (at -10 to +50 °C) (14 to 122 °F)		
	Frequency setting resolution		· Analog setting: 1/3000 of maximum output frequency · Keypad setting: 0.01 Hz · Link setting: 1/20000 of maximum output frequency or 0.01 Hz (fixed)		
	Induction motors	When performing V/f control with sensor (*1) When performing dynamic torque vector control with sensor (*2)	Speed control range	· 1:20 (*1) (Minimum speed: Nominal speed) · 1:200 (*2) (Minimum speed: Nominal speed) · 1:2 (fixed torque area: fixed output area)	
			Speed control accuracy	· Analog setting: ±0.2% of maximum output frequency or below (at 25 ±10 °C) (77 ±18 °F) · Digital setting: ±0.01% of maximum output frequency or below (at -10 to +50 °C) (14 to 122 °F)	

Item				Explanation	Remarks
Output	Induction motors	When performing sensorless vector control	Speed control range	· 1:200 (Minimum speed: Nominal speed, 4P, 7.5 to 1500 r/min) · 1:2 (fixed torque area : fixed output area)	
			Speed control accuracy	· Analog setting: ±0.5% of nominal speed or below (at 25 ±10 °C) (77 ±18 °F) · Digital setting: ±0.5% of nominal speed or below (at -10 to +50 °C) (14 to 122 °F)	
		When performing vector control with sensor	Speed control range	· 1:1500 (Minimum speed: Nominal speed, 4P, 1 to 1500 r/min) · 1:16 (fixed torque area : fixed output area)	
			Speed control accuracy	· Analog setting: ±0.2% of maximum output frequency or below (at 25 ±10 °C) (77 ±18 °F) · Digital setting: ±0.01% of maximum output frequency or below (at -10 to +50 °C) (14 to 122 °F)	
	Synchronous motors	When performing sensorless vector control	Speed control range	· 1:10 (Minimum speed: Nominal speed, 6P, 180 to 1800 r/min) · 1:2 (fixed torque area : fixed output area)	
			Speed control accuracy	· Analog setting: ±0.5% of nominal speed or below (at 25 ±10 °C) (77 ±18 °F) · Digital setting: ±0.5% of nominal speed or below (at -10 to +50 °C) (14 to 122 °F)	
		When performing vector control with sensor	Speed control range	· 1:1500 (Minimum speed: Nominal speed, 4P, 1 to 1500 r/min) · 1:2 (fixed torque area : fixed output area)	
			Speed control accuracy	· Analog setting: ±0.2% of maximum output frequency (at 25 ±10 °C) (77 ±18 °F) · Digital setting: ±0.01% of maximum output frequency (at -10 to +50 °C) (14 to 122 °F)	
Control	Control method			· V/f control · Dynamic torque vector control · V/f control with sensor, dynamic torque vector control with sensor · Sensorless vector control · Vector control with sensor · Sensorless vector control (synchronous motors) · Vector control with sensor (synchronous motors)	
	Voltage/frequency characteristics		200V series	· The base frequency and maximum output frequency are common, and the voltage can be set between 80 and 240 V. · AVR control can be turned ON or OFF. · Non-linear V/f setting (3 points): The desired voltage (0 to 240 V) and frequency (0 to 599 Hz) can be set.	
			400V series	· The base frequency and maximum output frequency are common, and the voltage can be set between 160 and 500 V. · AVR control can be turned ON or OFF. · Non-linear V/f setting (3 points): The desired voltage (0 to 500 V) and frequency (0 to 599 Hz) can be set.	

Table 12.3-2

	Item	Explanation	Remarks
Control	Torque boost	· Auto torque boost (for constant torque load) · Manual torque boost: The desired torque boost value (0.0 to 20.0%) can be set. · The applicable load can be selected (for constant torque load, quadratic-torque load)	
	Starting torque (HHD specification)	· FRN0115G2S-2G/FRN0060G2■-4G or below 200% or higher, · FRN0145G2S-2G/FRN0085G2■-4G or above 180% or higher set frequency: 0.3 Hz, when performing V/f control (base frequency: 50 Hz, slip compensation/auto torque boost)	
	Running, operation	Key operation: Start and stop with RUN and STOP keys (standard keypad) Start and stop with FWD, REV, and STOP keys (optional multi-function keypad)	
		External signals: Forward (reverse) rotation, start/stop commands (capable of 3-wire operation), (digital input) coast to stop command, external alarm, alarm reset, etc.	
		Link operation: Operation through RS-485, field bus communication (option)	
		Run command switching: Remote/local switching, link switching	
		[RUN] key hold: The RUN key (FWD, REV keys on multi-function keypad) status is held when a power failure occurs while running the inverter with the keypad, and operation is resumed once the power is restored. *1	
	Frequency setting	Keypad operation: Using ▲ and ▼ keys	
		External potentiometer: Using external frequency command potentiometer (external resistor of 1 to 5 kΩ, 1/2 W)	
		Analog input: Voltage input (terminal [12], [V2], [C1] (V3 function)) 0 to ±10 VDC (±5 VDC)/0 to ±100% 0 to +10 VDC (+5 VDC)/0 to +100% (+1 to +5 VDC can also be adjusted with bias, analog input gain) Voltage input (terminal [C1] (C1 function)) 4 to 20 mA DC/0 to 100%, 0 to 20 mA DC/0 to 100% 4 to 20 mA DC/-100 to +100%, 0 to 20 mA DC/-100 to +100%	
		UP/DOWN operation: Frequency can be increased or decreased while the digital input signal is ON. The frequency is cleared with digital input “STZ”.	
		Multistep frequency selection: Selectable from 16 different frequencies (step 0 to 15)	
		Pattern operation: The inverter runs automatically according to the previously specified run time, rotation direction, acceleration/deceleration time and reference frequency. Up to 7 stages can be specified.	
		Link operation: Setting through RS-485, field bus communication (option) (built in as standard)	
		Frequency setting switching: Two types of frequency settings can be switched with an external signal (digital input). Remote/local switching, link switching	

Item		Explanation	Remarks
Control	Frequency setting	Auxiliary frequency setting: Can be selected by adding and entering the respective terminal [12], [C1], or [V2] inputs.	
		Operation at a specified ratio: The ratio can be set with an analog input signal.	
		Inverse operation: Can be switched from “0 to +10 VDC/0 to 100%” to “-10 to 0 VDC/0 to 100%” from an external source. Can be switched from “4 to 20 mA DC/0 to 100%” to “20 to 4 mA DC/0 to 100%” from an external source. Can be switched from “0 to 20 mA DC/0 to 100%” to “20 to 0 mA DC/0 to 100%” from an external source.	
		Pulse train input : (standard) Pulse input = terminal [X6], [X7], forward/reverse pulse, pulse + rotation direction Complementary output: Max. 100 kHz Open collector output: Max. 30 kHz	
		Pulse train input : (option) PG interface option, forward/reverse pulse, pulse + rotation direction Complementary output: Max. 100 kHz Open collector output: Max. 30 kHz	
	Acceleration/deceleration time	Setting range: Setting range from 0.00 to 6000 s	
		Switching: The four types of acceleration/deceleration time can be set or selected individually (switchable during operation).	
		Acceleration/deceleration pattern: Linear acceleration/Deceleration, S-curve acceleration/deceleration (week, random (weak)), curve line acceleration/deceleration (max. acceleration/deceleration at rated output)	
		Deceleration mode (coast to stop): Shutoff of the run command lets the motor coast to a stop.	
		Forcible stop deceleration time: Deceleration stop in exclusive deceleration time by forced stop (STOP).	
		JOG dedicated acceleration/deceleration time	
		Acceleration/deceleration time is changed to 0 with acceleration/deceleration operation cancel "BPS".	

*1 Supported with ROM0500 or later.

Table 12.3-3

	Item	Explanation	Remarks
Control	Frequency limiter (upper limit and lower limit frequencies)	· Specifies the upper and lower frequencies in Hz. · Processing can be selected when the reference frequency is less than the lower limit (F16). (The output frequency will be maintained at the lower limit/motor decelerates and stops.) · Setting is possible with analog input terminals [12], [C1] (C1 function, V3 function) and [V2].	
	Frequency/PID command bias	Bias of reference frequency and PID command can be independently set (setting range: 0 to ±100%).	
	Analog input	· Gain: Setting range from 0 to 400% · Offset: Setting range from -5.0 to +5.0% · Filter: Setting range from 0.00 to 5.00 s	
	Jump frequency	Six operation points and their common jump width (0 to 30.0 Hz) can be set.	
	Ready for jogging	Operation with (RUN) key (standard keypad), (FWD) or (REV) keys (multi-function keypad), or digital contact inputs “FWD” or “REV” (Exclusive acceleration/deceleration time setting, exclusive frequency setting)	
	Restart mode after momentary power failure	· Trip immediately: Trip immediately at the time of power failure. · Trip after recovery from power failure: Coast to a stop at the time of power failure and trip when the power is recovered. · Trip after decelerate-to-stop: Deceleration stop at power failure, and trip after stoppage · Continue to run: Operation is continued using the load inertia energy. · Start at the frequency selected before momentary power failure: Free run at power failure and start after power recovery at the frequency selected before momentary stop. · Start at starting frequency: Free run at power failure and start at the starting frequency after power recovery.	
	Hardware current limiter	Limits the current by hardware to prevent an overcurrent trip from being caused by fast load variation or momentary power failure, which cannot be covered by the software current limiter. This limiter can be canceled.	
	Current limiting (software current limiter)	· Automatically reduces the frequency so that the output current becomes lower than the preset operation level. (This limiter can be canceled.) · The operation can be selected (operation at constant speed only, operation when accelerating and at constant speed).	
	Operation by commercial power supply	· With commercial power selection commands (“SW50”, “SW60”), the inverter outputs 50/60 Hz. · Commercial switching sequence built in	
	Slip compensation	Compensates for decrease in speed according to the load.	
	Droop control	Decreases the speed according to the load torque.	
	Torque limit control	· Switchable between 1st and 2nd torque limit values. · Torque limiting/torque current limiting/power limiting for each quadrant · Analog torque limit input	
	Software current limiter	Automatically reduces the frequency so that the output current becomes lower than the preset operation level.	

Item		Explanation	Remarks
Control	PID control	· PID processor for process control/dancer control · Switch normal/inverse operation · PID command: keypad, analog input (terminals [12], [C1] (C1 function, V3 function), [V2],), RS-485 communication, Field bus communication (option) · PID feedback value: analog input (terminals [12], [C1] (C1 function, V3 function), [V2]) · Alarm output (absolute value alarm, deviation alarm) · PID feedback error detection *1 · Sensor input quantity scaling function *1 · Sensor input conversion/calculation function *1 · Low liquid level stop function (pressurized operation possible before low liquid level stop) · Slow flowrate stop operating frequency automatic update function *1 · PID output limiter · Integration reset/hold · Anti-reset wind-up function · PID constant auto tuning function for process control PID controller · Built-in external PID regulator : 3 units *1	
	Retry	· Even if the retry target protective function is triggered, an attempt is made to automatically clear the trip condition up to the number of set attempts, and operation is resumed without outputting an integrated alarm. · The number of attempts can be set up to 20 times (set with function code). · The wait time until a reset is performed can be set. · Retry target alarms can be set.	
	Auto search	The motor speed is estimated before startup, and the motor is started without ever stopping the motor while it is idling. (Motor constants must be tuned. Auto tuning (offline))	

*1 Supported with ROM0500 or later.

Table 12.3-4

	Item	Explanation	Remarks
Control	Anti-regenerative control (Automatic deceleration)	· If the intermediate DC voltage/torque calculation value reach or exceed the anti-regenerative control level when the motor is decelerating, the deceleration time is automatically extended to avoid an overvoltage trip. (Forced deceleration can be set at three or more times the deceleration time.) · If the torque calculation value reaches or exceeds the anti-regenerative control level during constant speed operation, overvoltage tripping is avoided by performing control to raise the frequency.	
	Deceleration characteristics (Improvement of braking performance)	The motor loss is increased during deceleration to reduce the regenerative energy in the inverter to avoid overvoltage trip.	
	Auto energy saving operation	Controls the output voltage to minimize the total sum of the motor loss and inverter loss. (Auto energy saving control can be turned ON and OFF from an external source with a digital input signal.)	
	Overload prevention control	If the surrounding temperature or IGBT junction temperature increases due to overload, the inverter lowers the output frequency to avoid overload.	
	Offline tuning	Tunes the motor while the motor is stopped or running, for setting up motor parameters.	
	Online tuning	This corrects changes in motor constants caused by temperature rise.	
	Cooling fan ON-OFF control	· Detects inverter internal temperature and stops cooling fan when the temperature is low. · Possible to output a fan control signal to an external device.	
	Motor 1 to 4 settings	· Switching is possible between 4 motors. (Synchronous motor switching is not possible.) · It is possible to switch between four types of specific function code data (switching is possible while the motor is running.) The following data can be set for motors 1 to 4: base frequency, rated current, torque boost, electronic thermal slip compensation.	
	Universal DI	Transfers the status of an external digital signal connected with the general-purpose digital input terminal to the host controller.	
	Universal DO	Outputs a digital command signal sent from the host controller to the general-purpose digital output terminal.	
	Universal AO	Outputs an analog command signal sent from the host controller to the analog output terminal.	
	Speed control	· Selection is possible from four types of auto speed regulator (ASR) parameters. · Notch filter for vibration control	
	Line speed control	To suppress increases in peripheral speed (line speed), the motor speed is controlled so that the peripheral speed remains constant even if the roll winding diameter changes.	
	Master-follower operation	Performs synchronization for two motors.	
	Pre-excitation	Excitation is carried out to create the motor flux before starting the motor.	
	Zero speed control	The motor speed is held to zero by forcibly zeroing the speed command.	
	Servo lock	Stops the motor and holds the motor in the stopped position.	
	DC braking	Applies DC current to the motor when the inverter starts or stops to generate braking torque.	

Item		Explanation	Remarks
Control	Mechanical brake control	· The control signal release and input timing can be adjusted with output current and torque commands, output frequency, and a timer. · The timing of control signals can be adjusted individually when performing forward rotation (hoisting) and reverse rotation (lowering). · Errors are detected with mechanical brake operation check input signals.	
	Torque control	· Analog torque command input · Speed limit function is provided to prevent the motor from becoming out of control. · Torque bias (with analog setting, digital setting) possible	
	Rotation direction limitation	Select either of reverse or forward rotation prevention.	
	Motor condensation prevention	Current flows automatically when the motor is stopped, and the motor temperature is raised to prevent condensation.	
	Customizable logic interface	It is possible to select or connect digital logic circuits or analog operation circuits with digital/analog I/O signals, configure a simple relay sequence, and operate it freely. (Max. 260 steps)	
	Battery operation	Inverters at which an undervoltage has occurred are run with the battery power. FRN0008G2S-2G to FRN0180G2S-2G (200V class), FRN0004G2□-4G to FRN0179G2□-4G (400V class)	
	Overload stop function	This is used for raising and lowering applications, and when raising, the motor stops when the inverter detects an overload. After stopping, operation is possible only in the lowering direction.	
	Load adaptive control function	If the load is lighter than the load level set beforehand, the motor can be run at the maximum permissible frequency (e.g., vertical conveyors, conveyors) based on the frequency/load multiplied by the specified ratio relative to the set frequency.	
	Position control	· Absolute positioning/relative positioning using a pulse encoder is possible. · The stop target position can be set with a function code (8 points) or by communication in the unit system (using electronic gear) preferred by the user. · Homing, preset, clear function, teaching function · Position regulator (APR), position feed forward function · The movable range can be set with the overtravel detection/stop function.	
	Orientation function	This function makes it possible for rotors such as the machine tool spindle or turntable to be positioned. The stop target position can be set with a function code (8 points).	
	Pump control *1	· Cascade operation (fixed-type drive motor: 1 + 8 units, circulation-type drive motor: 4 units (when using OPC-RY2)) · Run time homogenization function · Anti jam function · Auxiliary motor control function · Check valve protection function · Control of maximum starts per hour function · Boost function · Drought detection function · Filter clogging prevention function · End of curve protection	
	Rotary operation *1	With RTU Communication, up to 3 inverters can be connected.	

Item		Explanation	Remarks
	Wet-bulb temperature estimation control *1	This function controls the fan to suppress unnecessary power use by estimating the wet-bulb temperature for cooling tower fan control so that cooling water can be linked to the outside air (wet-bulb) temperature.	
	Scheduled operation *1	Combination with the TP-A2SW built-in RTC (Real Time Clock) allows the inverter to be run and stopped, and external signals to be output. · 4 timers can be set in 1 week units. · National holidays (20/year) can be set. · The time can be offset to take daylight saving time (DST) into account.	
	Favorites Function codes	Function codes can be registered in "Favorites" and displayed. (Applicable to: all function codes)	
	Data initialization	All function codes and limited function codes can be initialized. (for each motor, other than communication related items, customizable logic only, favorites only)	
	Simulated operation mode	A sequence check can be carried out without inverter output.	
	Start check function	To ensure safety, a check for the existence of run commands when turning the power ON, when resetting alarms, and when changing the run command method is performed, and an alarm is displayed if a run command has been input.	
	Multifunction button	The M/SHIFT button function when in running mode can be changed on standard keypads (TP-E2), allowing it to be used as means of input for functions such as the X terminal function.	
Control	Traceback	Data (can be selected by user) such as the frequency, voltage, and current immediately prior to tripping can be analyzed when saving.	

*1 Supported with ROM0500 or later.

Table 12.3-5

Item		Explanation	Remarks
Display	Running/stopping	Speed monitor (reference frequency, output frequency, motor speed, load shaft speed, Feed speed (Line speed), and speed indication percentage), output current [A], output voltage [V], calculated torque [%], power consumption [kW], PID command value, PID feedback value, PID output, load factor [%], motor output [kW], torque current (%), magnetic flux command (%), analog input monitor, input watt-hour etc.	
	Inverter lifetime alarm	· It is judged that the life of main circuit capacitors, electrolytic capacitors on PCBs,IGBT or the cooling fan has been reached. · Life alarm information can be output externally. · Ambient temperature: 40 °C Load factor: Inverter rated current of 100% (HHD specification), 80% (HND specification)	
	Cumulative operating status	· The inverter cumulative running time, cumulative input watt-hours, and motor cumulative running time/start count (for each motor) is displayed. · A warning is output if the maintenance time or startup count set beforehand is exceeded.	
	Trip	Displays the cause of a trip.	
	Warning	The cause of light alarms is displayed.	
	During operation, when trip occurs	· Trip history: The cause (code) of the up to the last four trips is retained and displayed. · All kinds of running status data for up to the past four trips is retained and displayed. · The month, day, and year can be displayed in the history by using the clock function (TP-A2SW).	
Protection	Refer to Chapter 6 “TROUBLESHOOTING”.		
Environment	Refer to Chapter 1 “1.3 Precautions for Using Inverters”.		

Chapter 13
EXTERNAL DIMENSIONS

This chapter gives external dimensions of the inverter.

Contents

13.1 Standard Specification, Semi-standard Specification ····· 13-1
13.2 Keypad ····· 13-21

13.1 Standard Specification, Semi-standard Specification

External dimension drawings for each inverter capacity are shown below.

(Note) □ is replaced by a letter of the alphabet indicating the inverter type.
□: S (basic type, E (built-in EMC filter type)

Refer to 13-13 onward for external dimension drawings indicated in inches.

(Unit: mm)

■ **FRN0003G2S-2G/FRN0002G2□-4G**

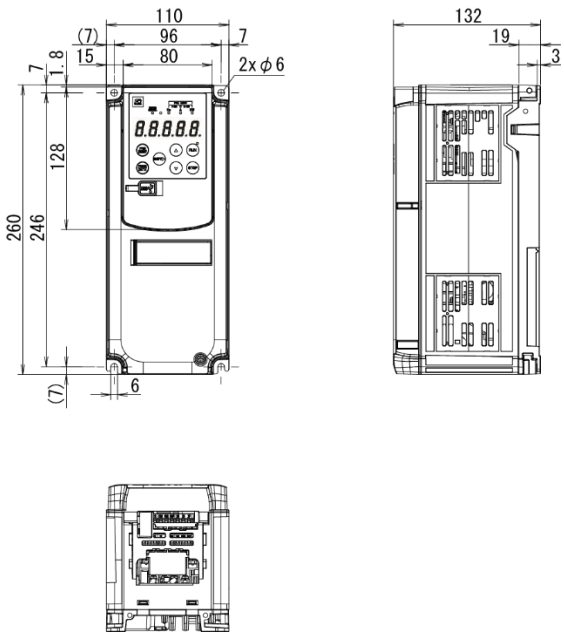

Fig. 13.1-1

■ **FRN0005G2S-2G/FRN0003G2□-4G**

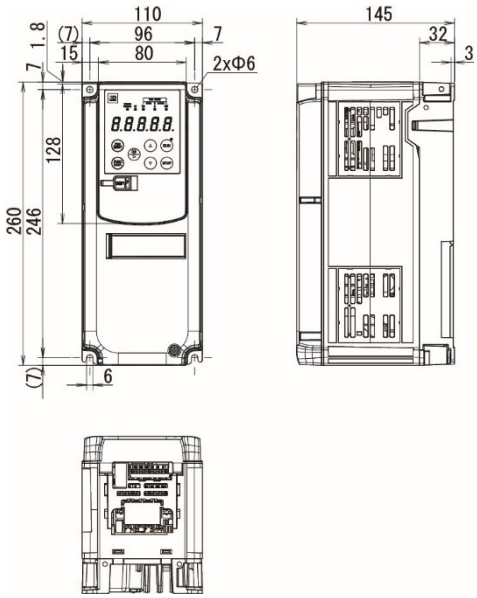

Fig. 13.1-2

■ **FRN0008G2S-2G/FRN0004G2□-4G**

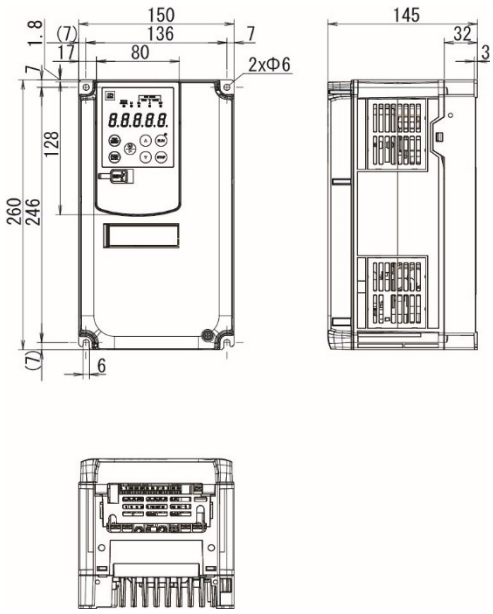

Fig. 13.1-3

■ **FRN0011G2S-2G/FRN0006G2□-4G,**
FRN0018G2S-2G/FRN0009G2□-4G

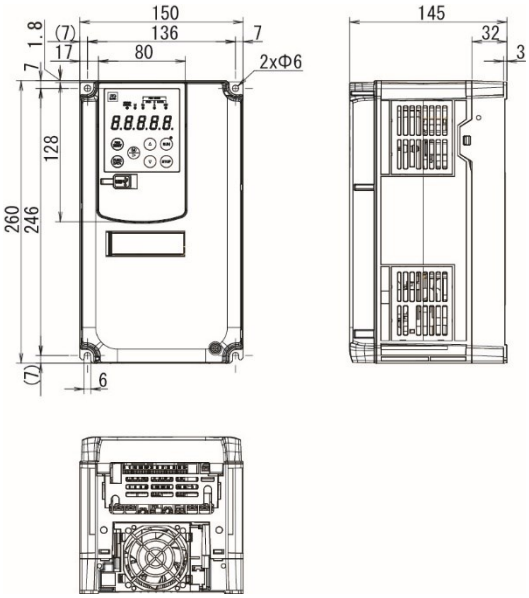

Fig. 13.1-4

(Unit: mm)

■ **FRN0032G2S-2G/FRN0018G2□-4G, FRN0046G2S-2G/FRN0023G2□-4G, FRN0059G2S-2G/FRN0035G2□-4G**

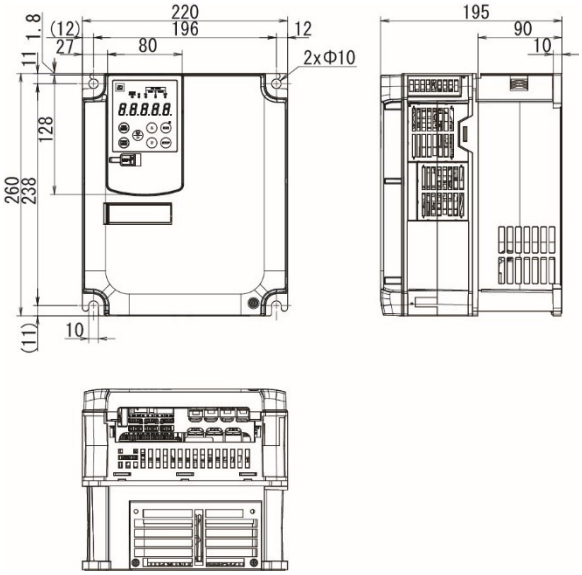

Fig. 13.1-5

■ **FRN0075G2S-2G/FRN0041G2□-4G, FRN0088G2S-2G/FRN0045G2□-4G, FRN0115G2S-2G/FRN0060G2□-4G**

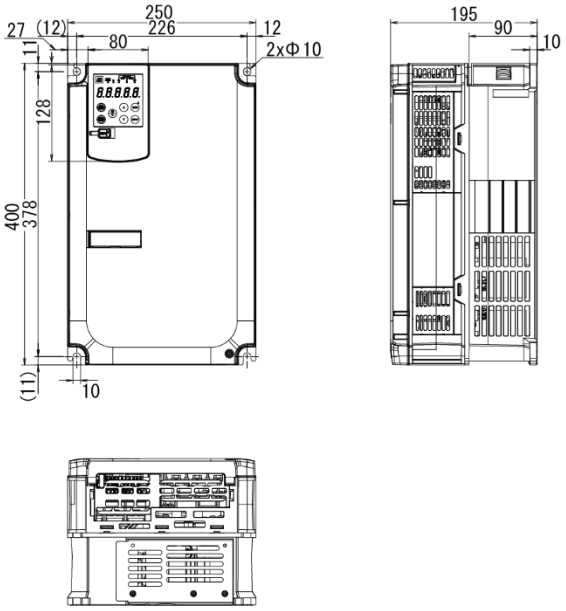

Fig. 13.1-6

(Unit: mm)

■ **FRN0146G2S-2G/FRN0085G2S-4G, FRN0105G2S-4G**

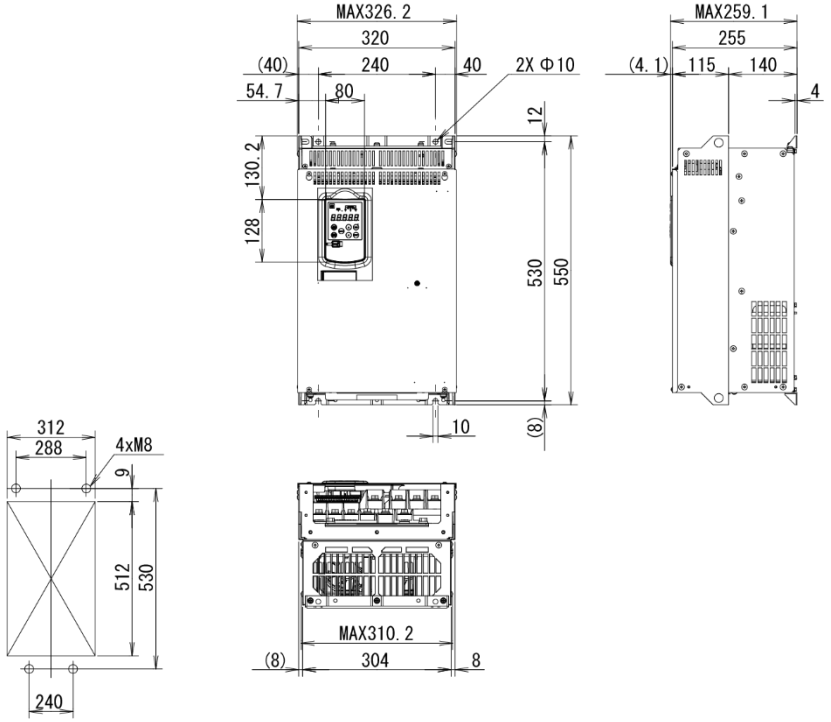

Panel cutout size drawing for external cooling installation

Fig. 13.1-7

■ **FRN0085G2E-4G, FRN0105G2E-4G**

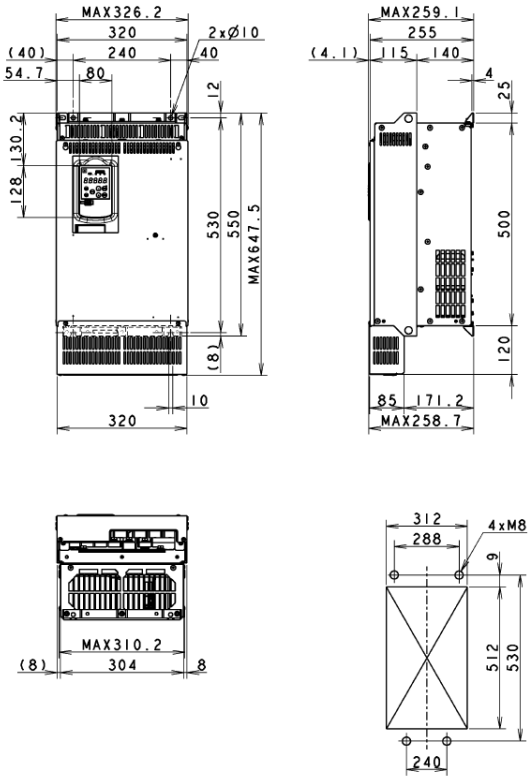

Panel cutout size drawing for external cooling installation

Fig. 13.1-8

(Unit: mm)

■ **FRN0180G2S-2G/FRN0139G2S-4G**

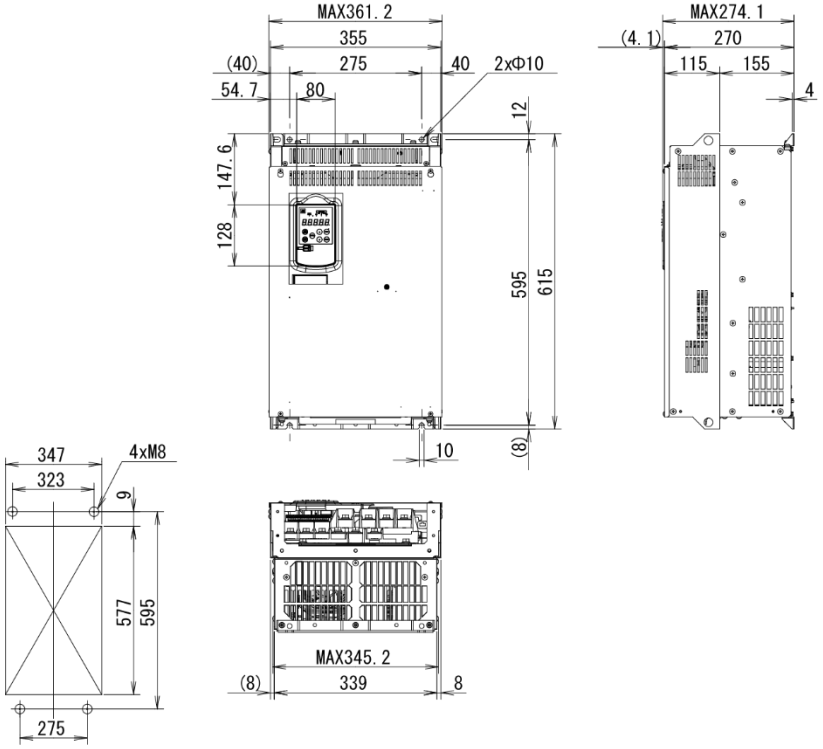

Panel cutout size drawing for external cooling installation

Fig. 13.1-9

■ **FRN0139G2E-4G**

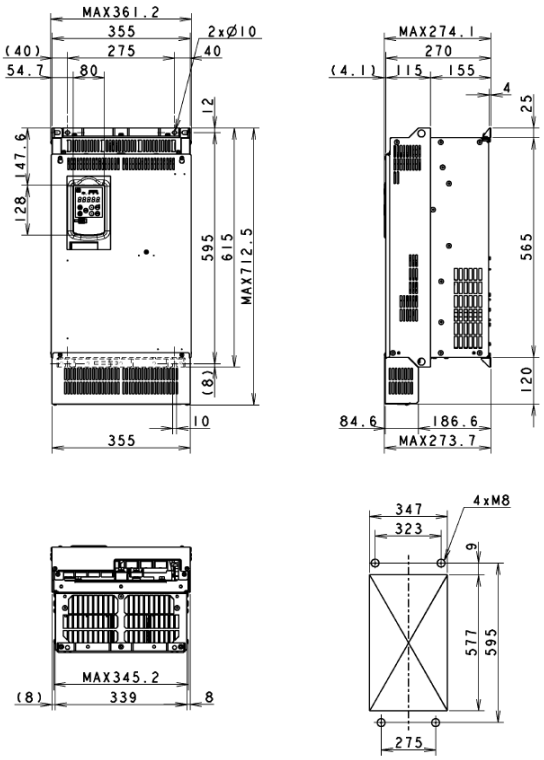

Panel cutout size drawing for external cooling installation

Fig. 13.1-10

(Unit: mm)

■ **FRN0179G2S-4G**

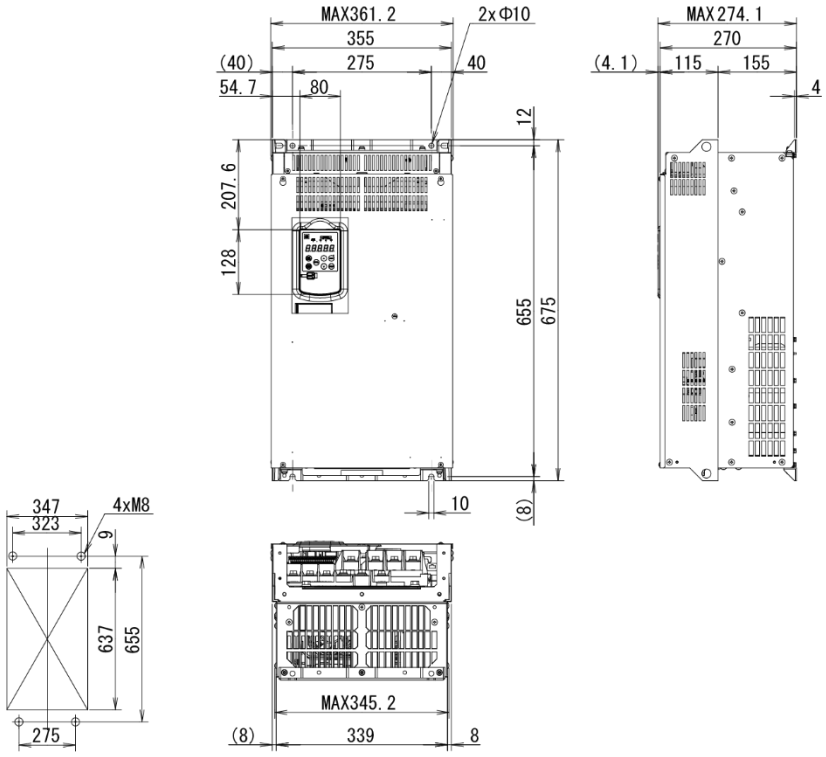

Panel cutout size drawing for external cooling installation

Fig. 13.1-11

■ **FRN0179G2E-4G**

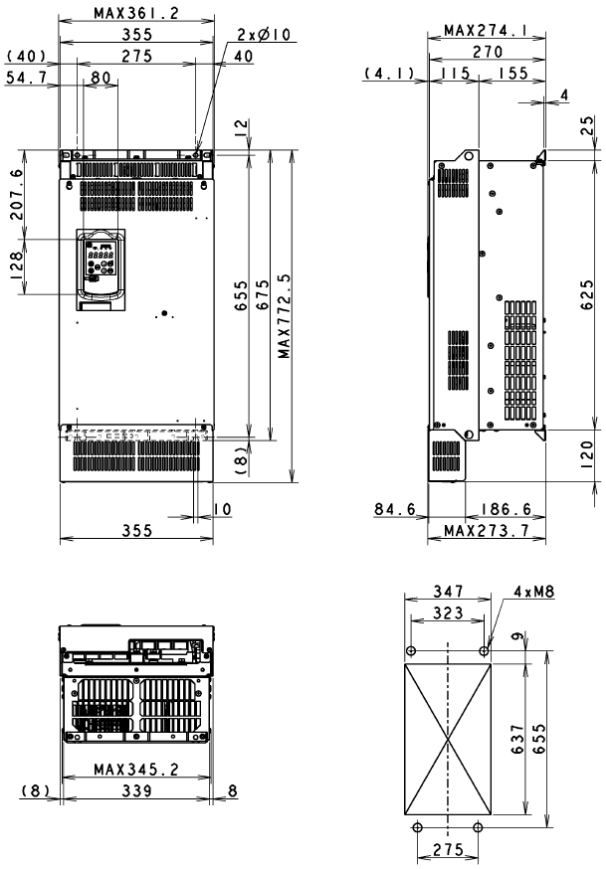

Panel cutout size drawing for external cooling installation

Fig. 13.1-12

(Unit: mm)

■ **FRN0215G2S-2G, FRN0288G2S-2G, FRN0217G2S-4G**

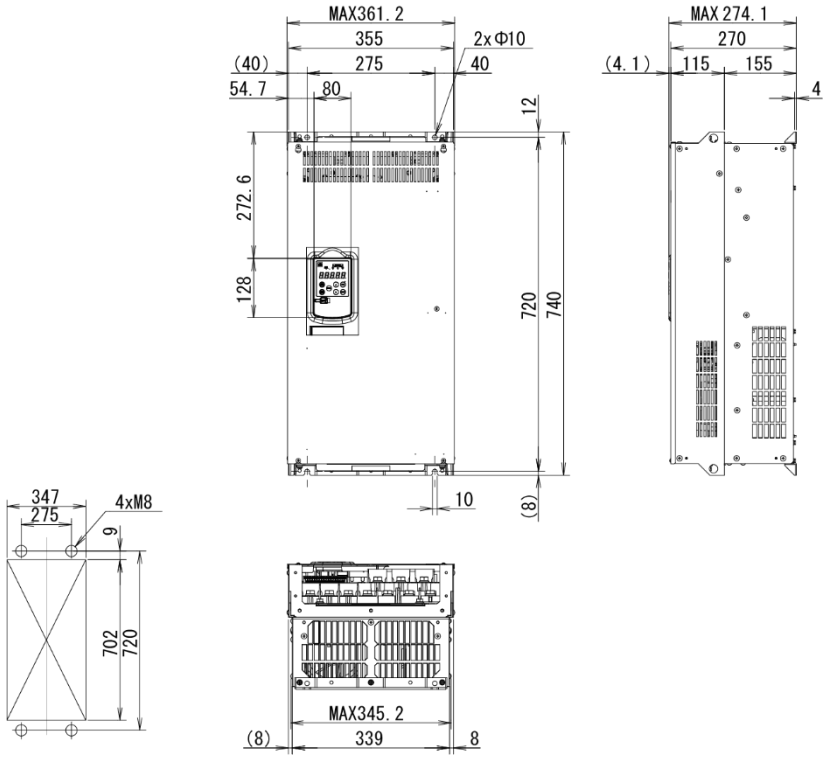

Panel cutout size drawing for external cooling installation

Fig. 13.1-13

■ **FRN0217G2E-4G**

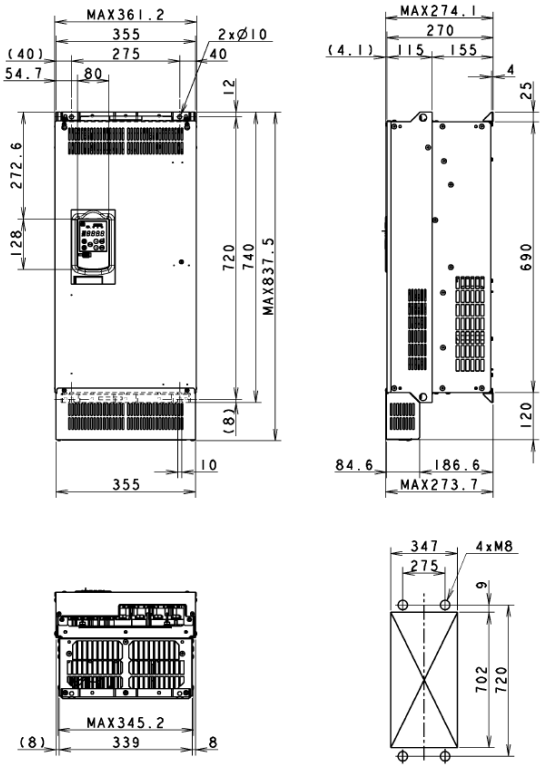

Panel cutout size drawing for external cooling installation

Fig. 13.1-14

(Unit: mm)

■ **FRN0346G2S-2G**

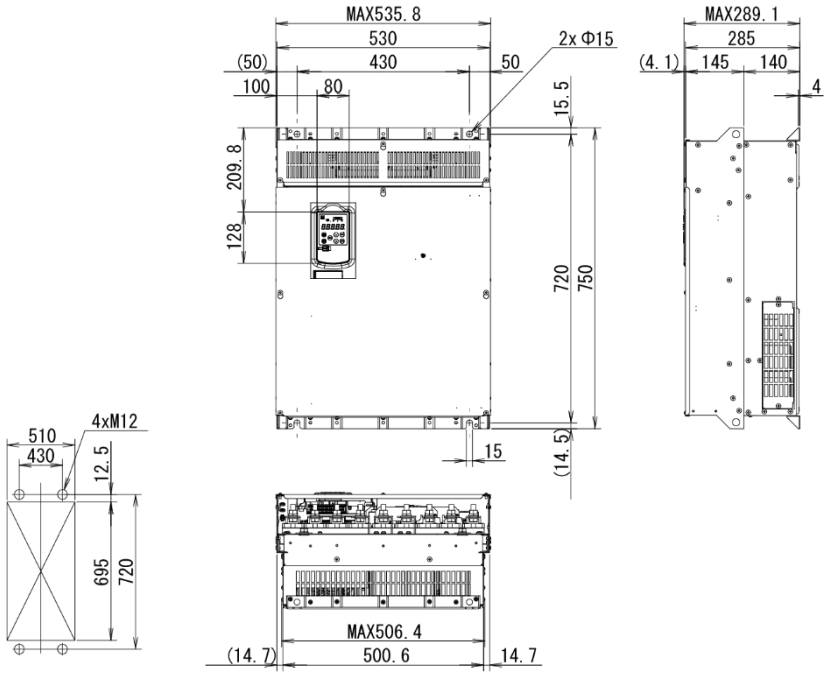

Panel cutout size drawing for external cooling installation

Fig. 13.1-15

■ **FRN0432G2S-2G**

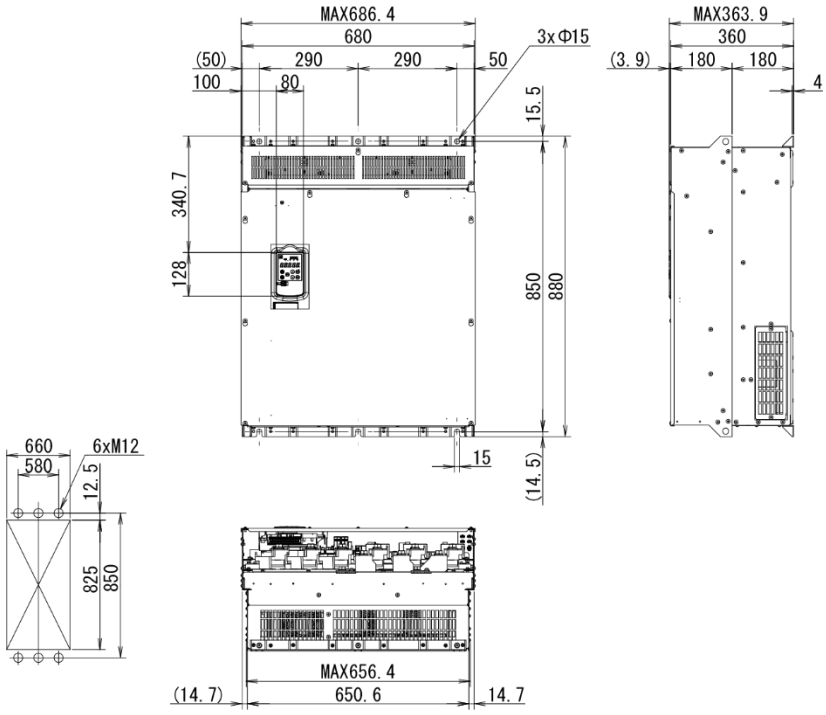

Panel cutout size drawing for external cooling installation

Fig. 13.1-16

(Unit: mm)

■ **FRN0261G2S-4G, FRN0290G2S-4G**

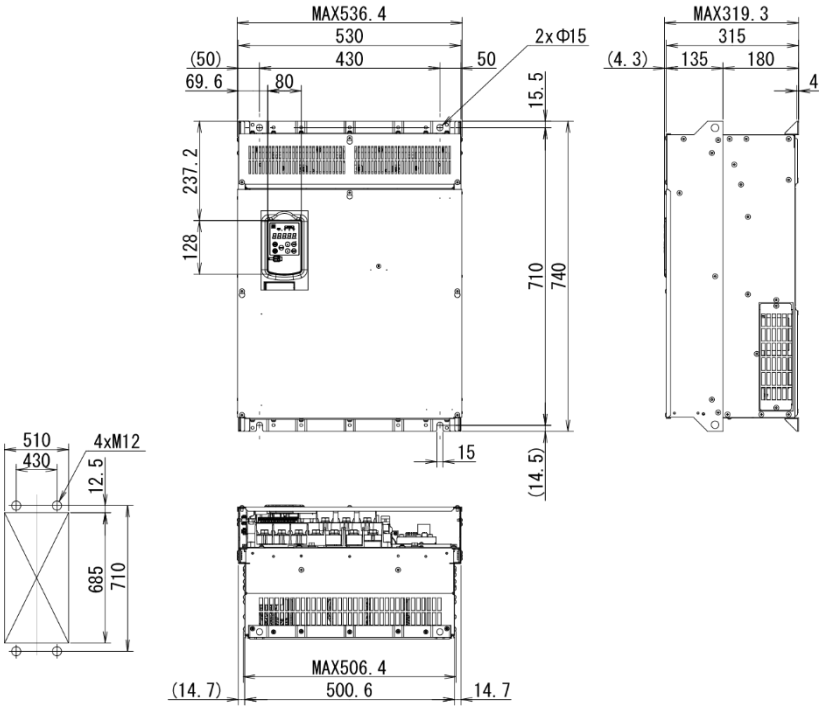

Panel cutout size drawing for external cooling installation

Fig. 13.1-17

■ **FRN0261G2E-4G, FRN0290G2E-4G**

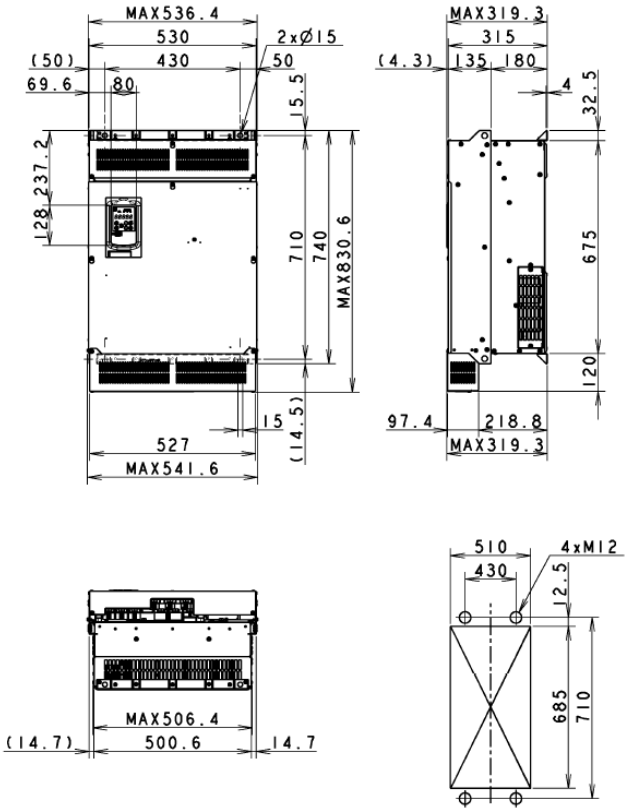

Panel cutout size drawing for external cooling installation

Fig. 13.1-18

(Unit: mm)

■ **FRN0376G2S-4G, FRN0431G2S-4G**

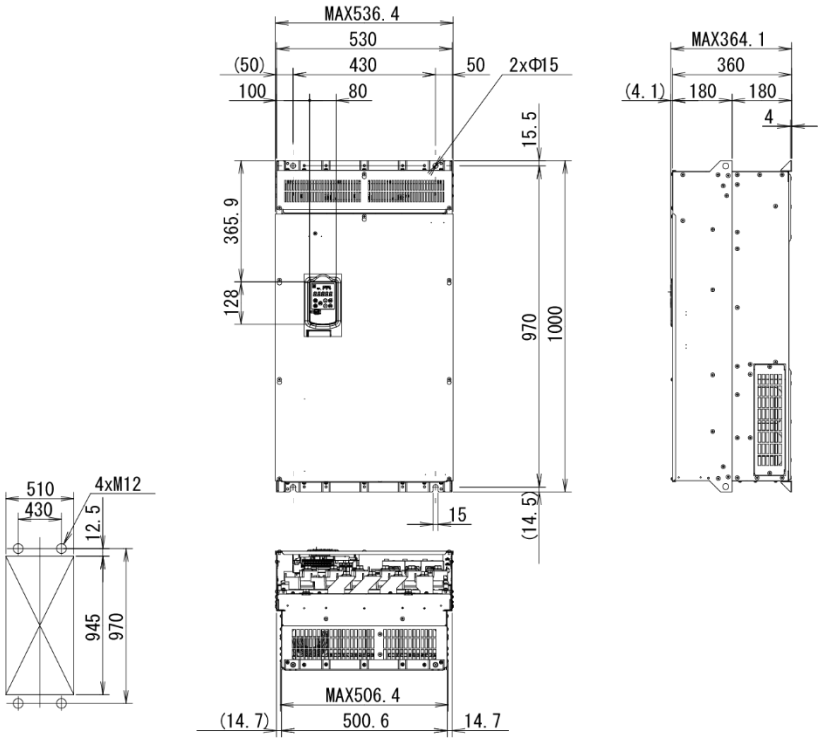

Panel cutout size drawing for external cooling installation

Fig. 13.1-19

■ **FRN0376G2E-4G, FRN0431G2E-4G**

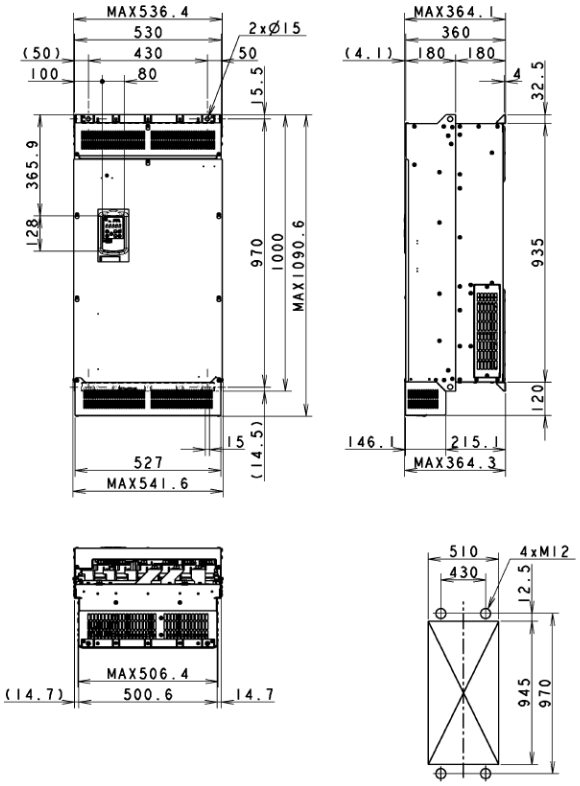

Panel cutout size drawing for external cooling installation

Fig. 13.1-20

(Unit: mm)

■ **FRN0547G2S-4G, FRN0610G2S-4G**

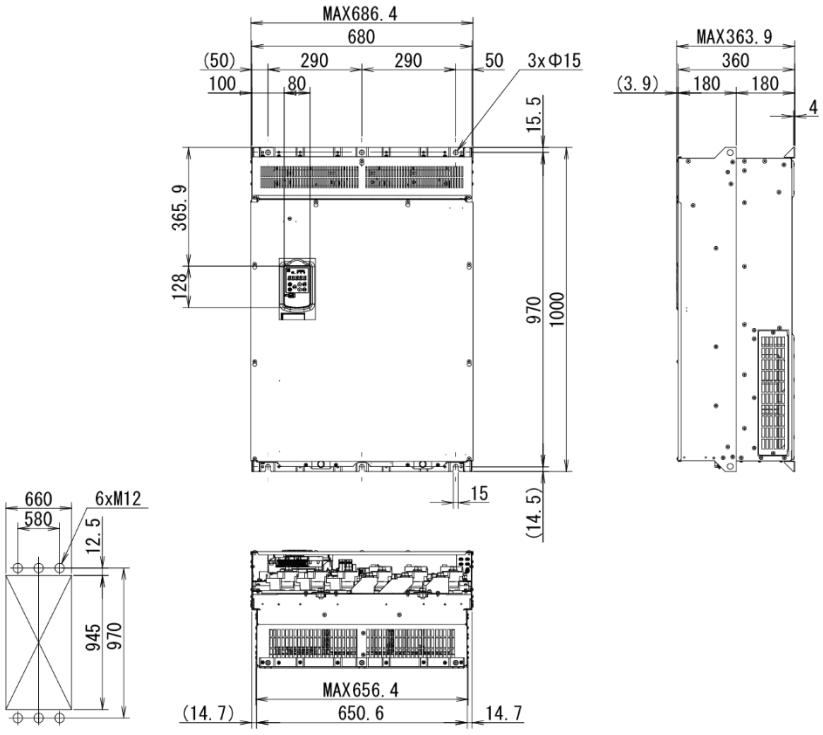

Panel cutout size drawing for external cooling installation

Fig. 13.1-21

■ **FRN0547G2E-4G, FRN0610G2E-4G**

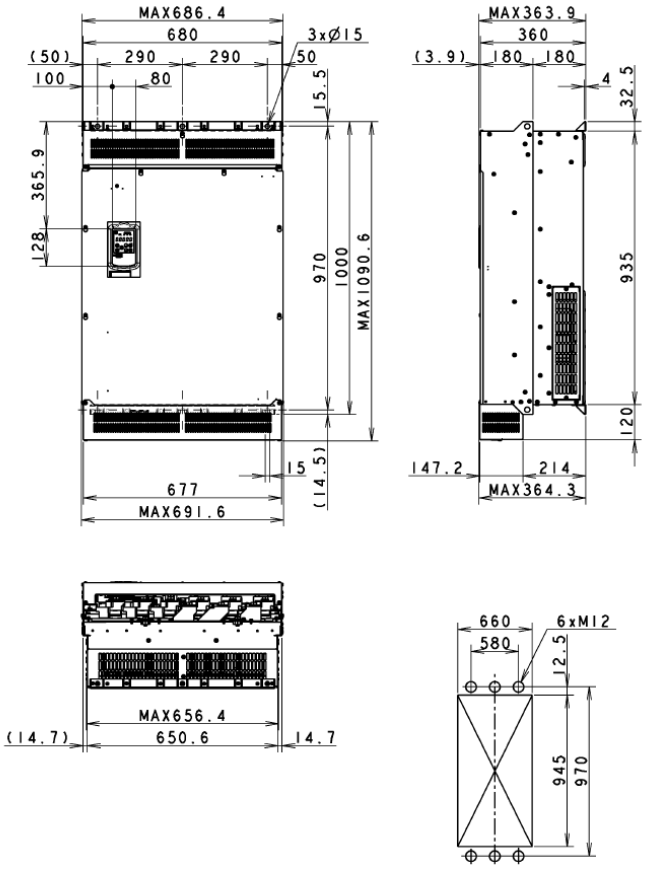

Panel cutout size drawing for external cooling installation

Fig. 13.1-22

(Unit: mm)

■ **FRN0739G2□-4G, FRN0840G2□-4G**

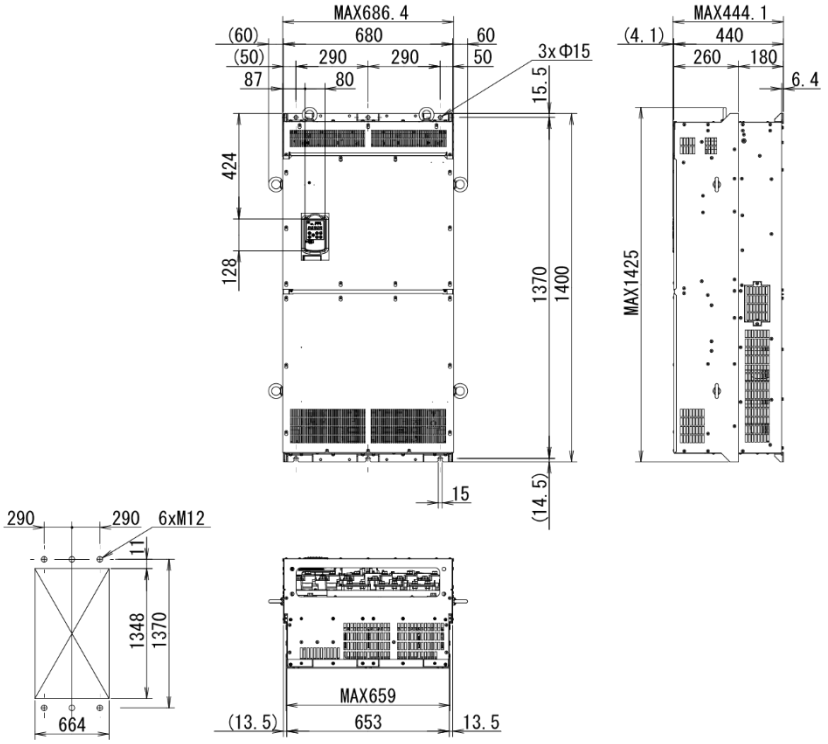

Panel cutout size drawing for external cooling installation

Fig. 13.1-23

■ **FRN1039G2□-4G, FRN1169G2□-4G**

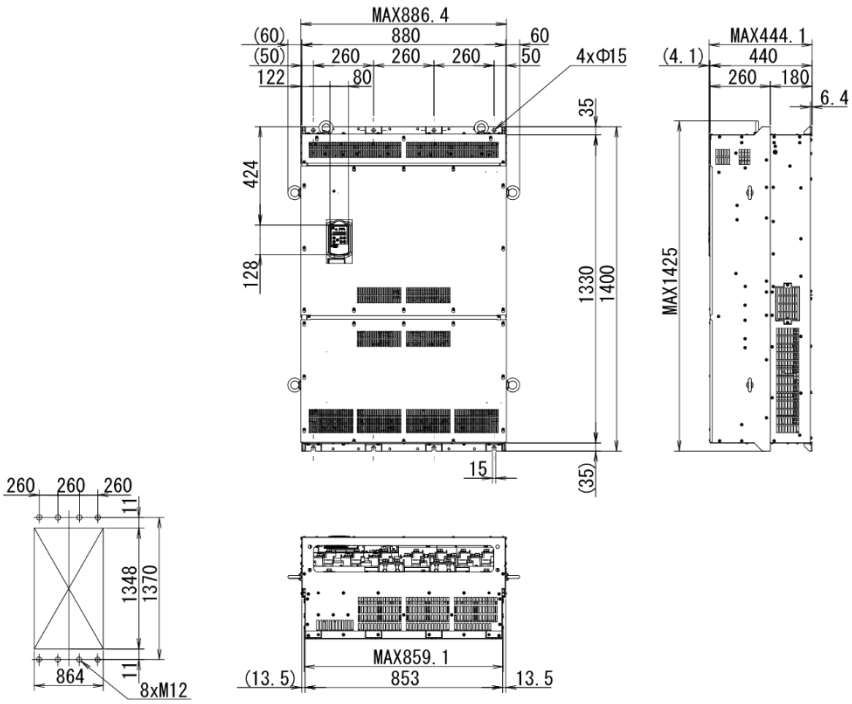

Panel cutout size drawing for external cooling installation

Fig. 13.1-24

(Unit: mm)

■ **FRN1385G2□-4G, FRN1480G2□-4G**

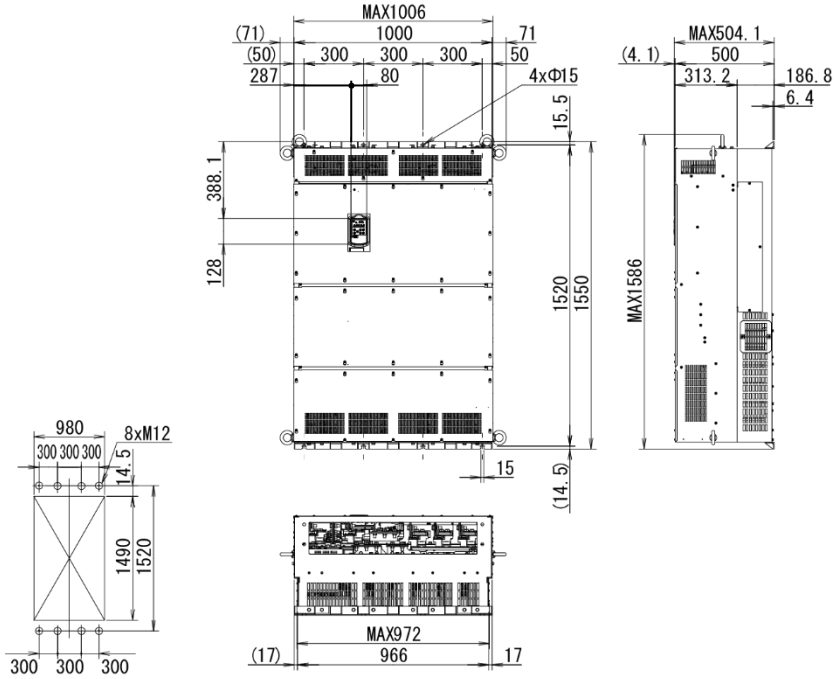

Panel cutout size drawing for external cooling installation

Fig. 13.1-25

External dimension drawings indicated in inches.

(Unit: inches)

■ **FRN0003G2S-2G/FRN0002G2□-4G**

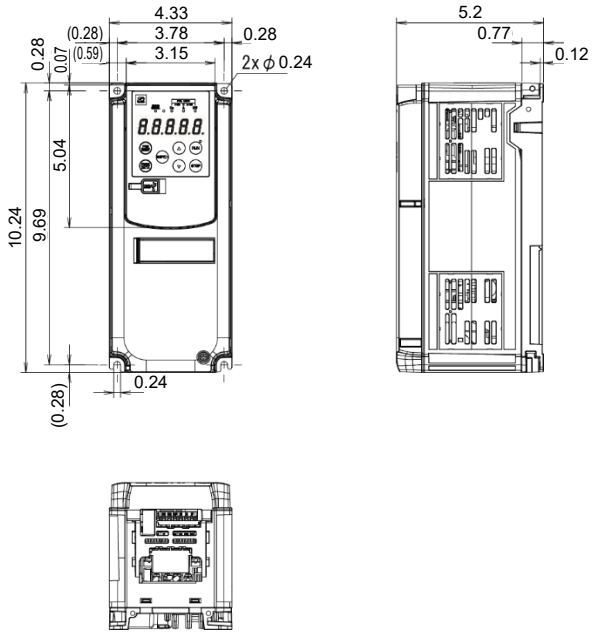

Fig. 13.1-26

■ **FRN0005G2S-2G/FRN0003G2□-4G**

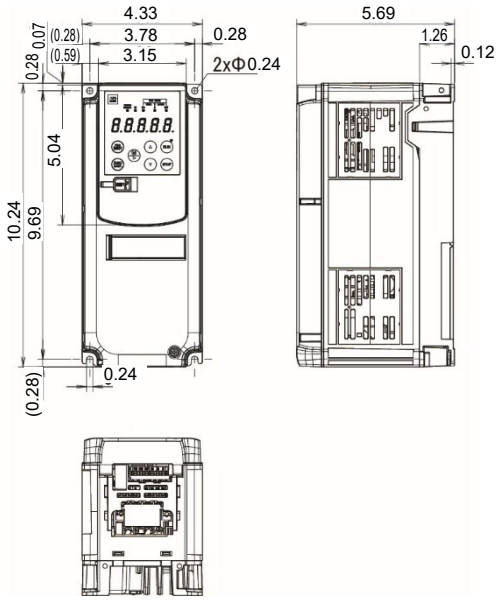

Fig. 13.1-27

■ **FRN0008G2S-2G/FRN0004G2□-4G**

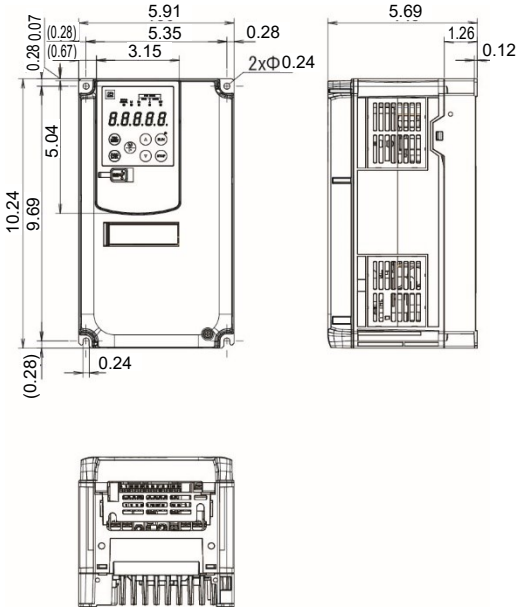

Fig. 13.1-28

■ **FRN0011G2S-2G/FRN0006G2□-4G,**
FRN0018G2S-2G/FRN0009G2□-4G

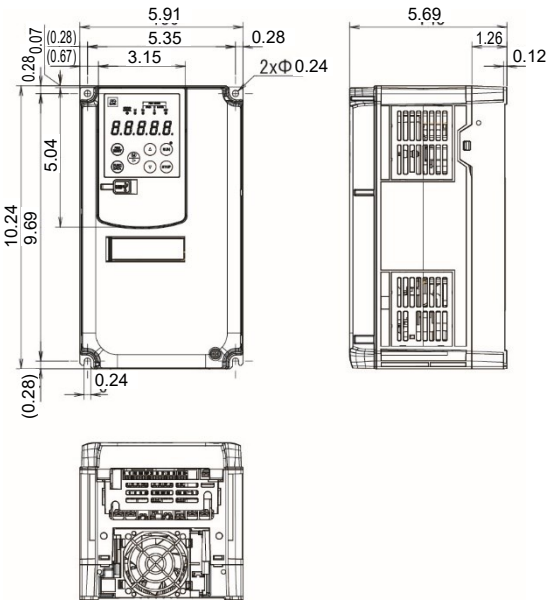

Fig. 13.1-29

(Unit: inches)

■ **FRN0032G2S-2G/FRN0018G2□-4G, FRN0046G2S-2G/FRN0023G2□-4G, FRN0059G2S-2G/FRN0035G2□-4G**

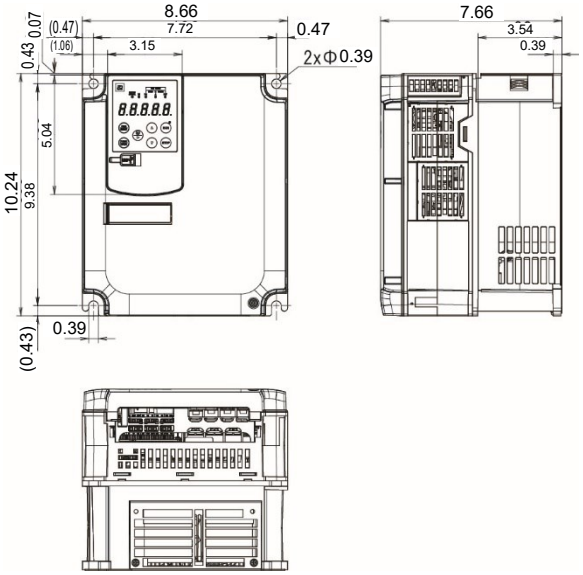

Fig. 13.1-30

■ **FRN0075G2S-2G/FRN0041G2□-4G, FRN0088G2S-2G/FRN0045G2□4G, FRN0115G2S-2G/FRN0060G2□-4G**

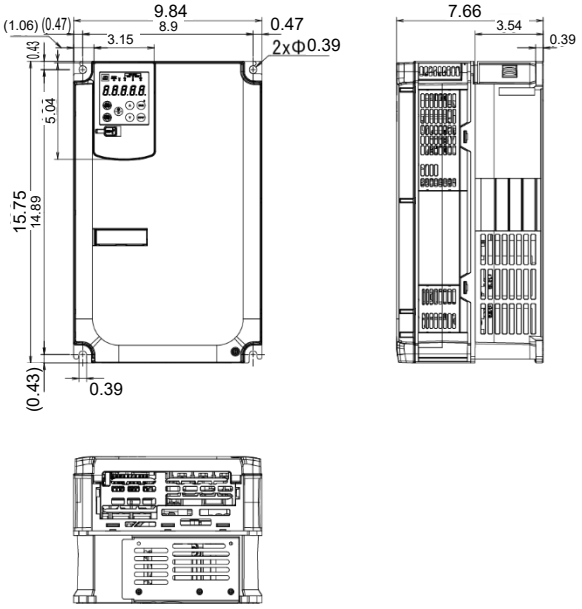

Fig. 13.1-31

■ **FRN0146G2S-2G/FRN0085G2S-4G, FRN0105G2S-4G**

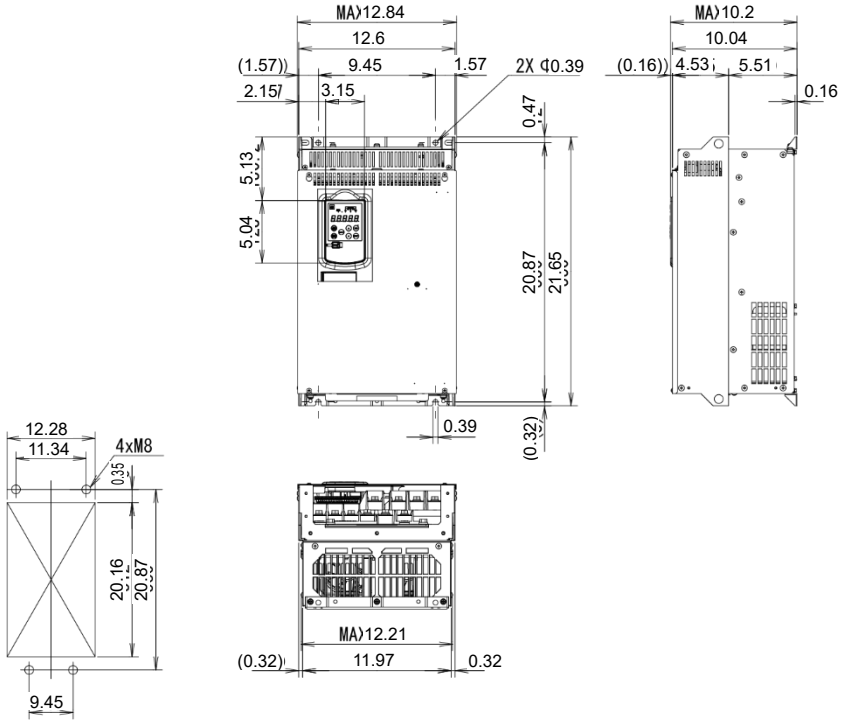

Panel cutout size drawing for external cooling installation

Fig. 13.1-32

(Unit: inches)

■ **FRN0180G2S-2G/FRN0139G2S-4G**

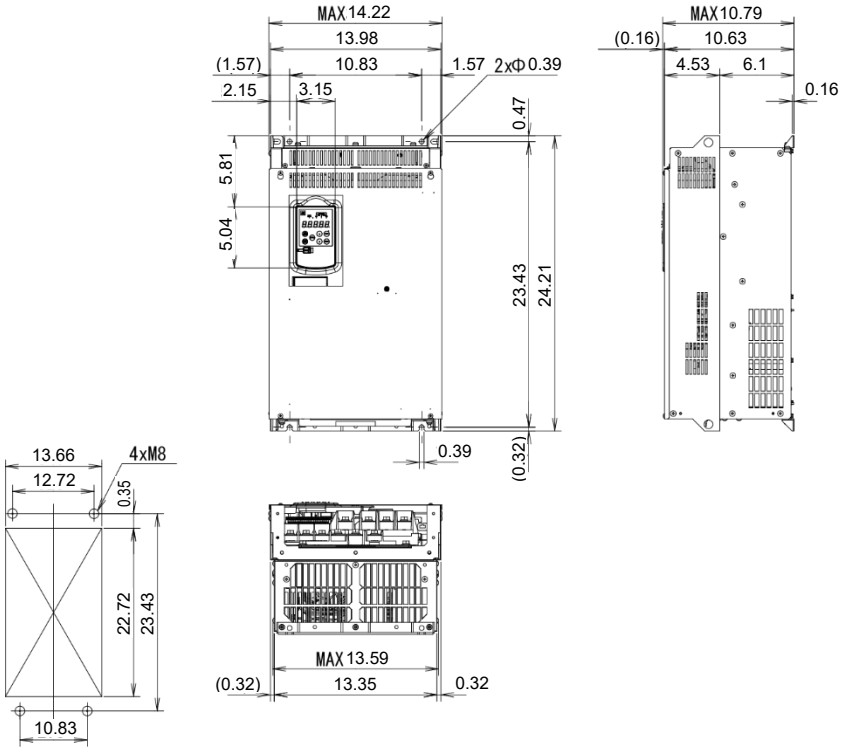

Panel cutout size drawing for external cooling installation

Fig. 13.1-33

■ **FRN0179G2S-4G**

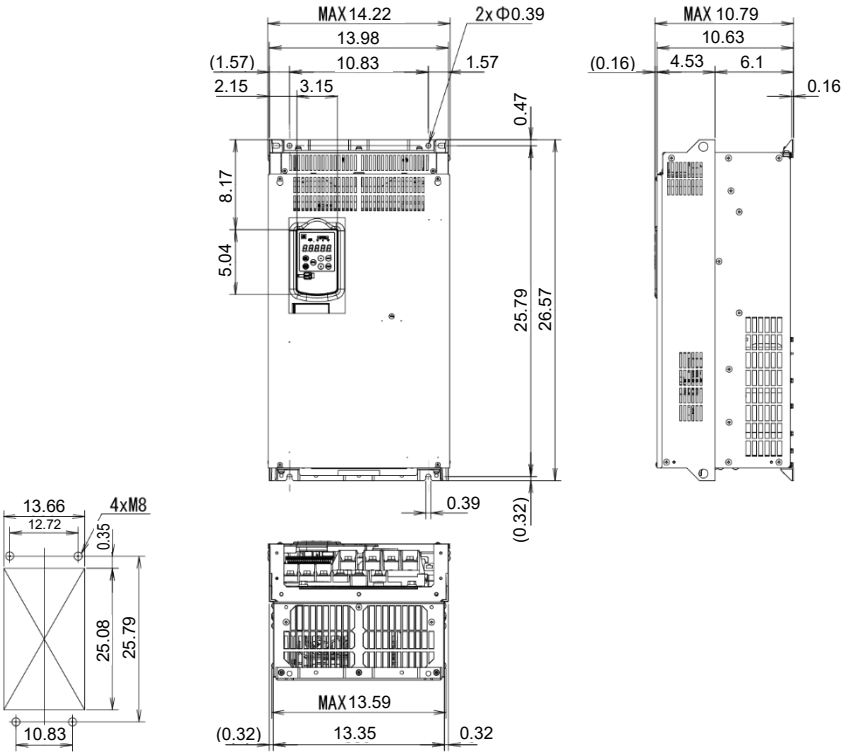

Panel cutout size drawing for external cooling installation

Fig. 13.1-34

(Unit: inches)

■ **FRN0215G2S-2G, FRN0288G2S-2G/FRN0217G2S-4G**

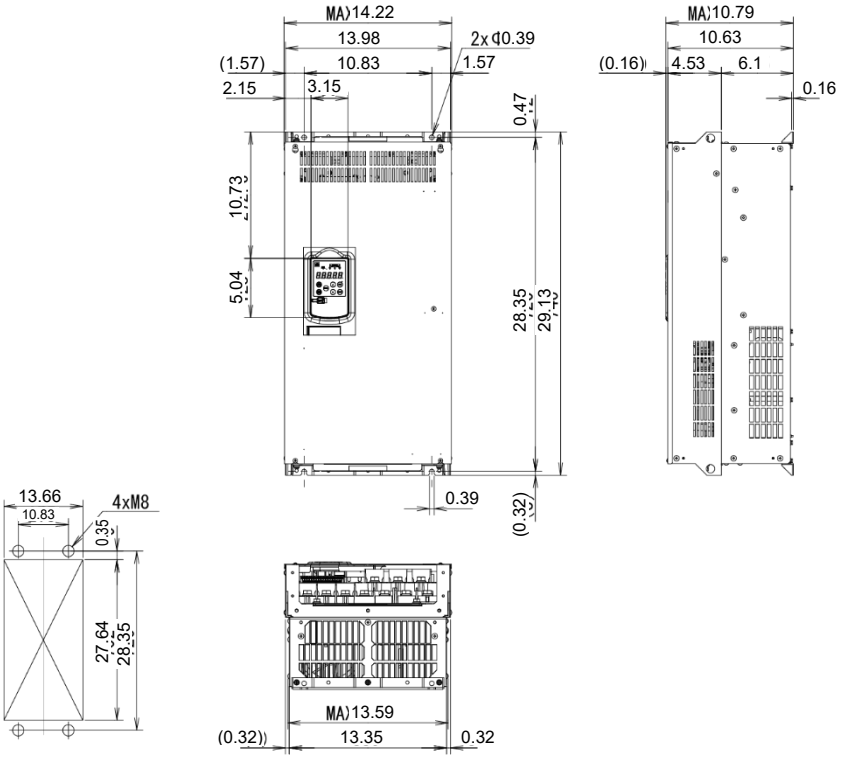

Panel cutout size drawing for external cooling installation

Fig. 13.1-35

■ **FRN0346G2S-2G**

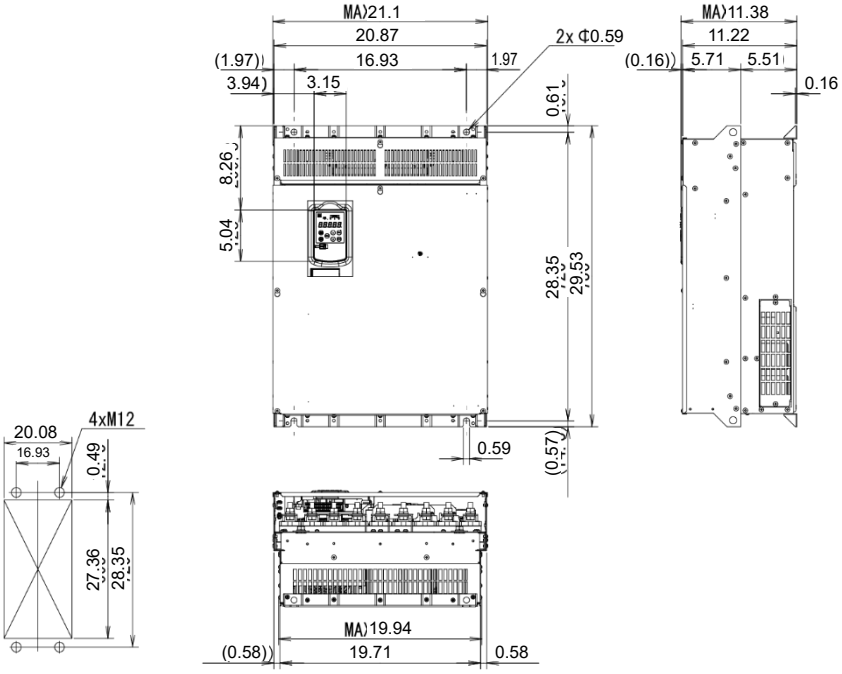

Panel cutout size drawing for external cooling installation

Fig. 13.1-36

(Unit: inches)

■ **FRN0432G2S-2G**

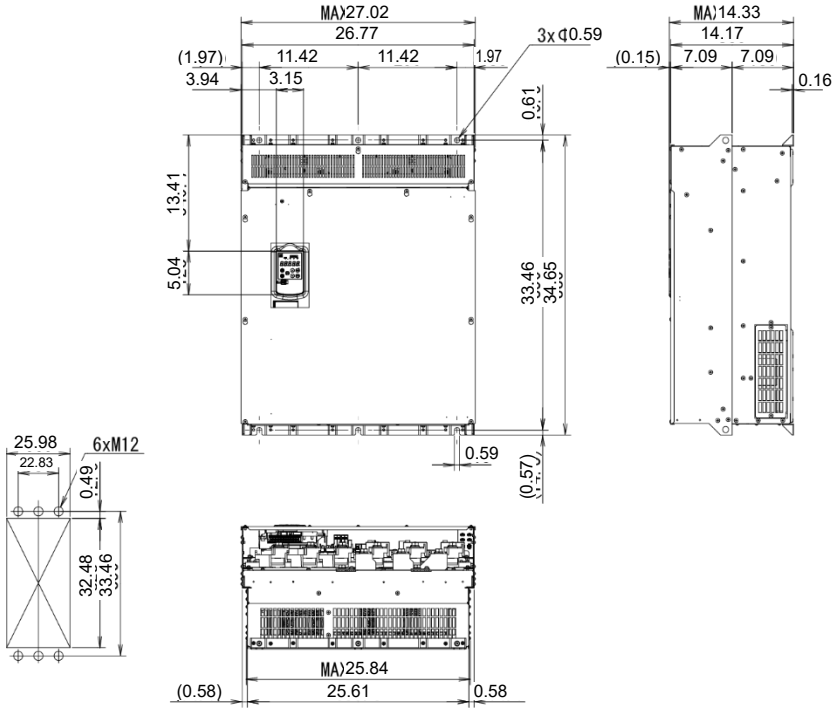

Panel cutout size drawing for external cooling installation

Fig. 13.1-37

■ **FRN0261G2S-4G/FRN0290G2S-4G**

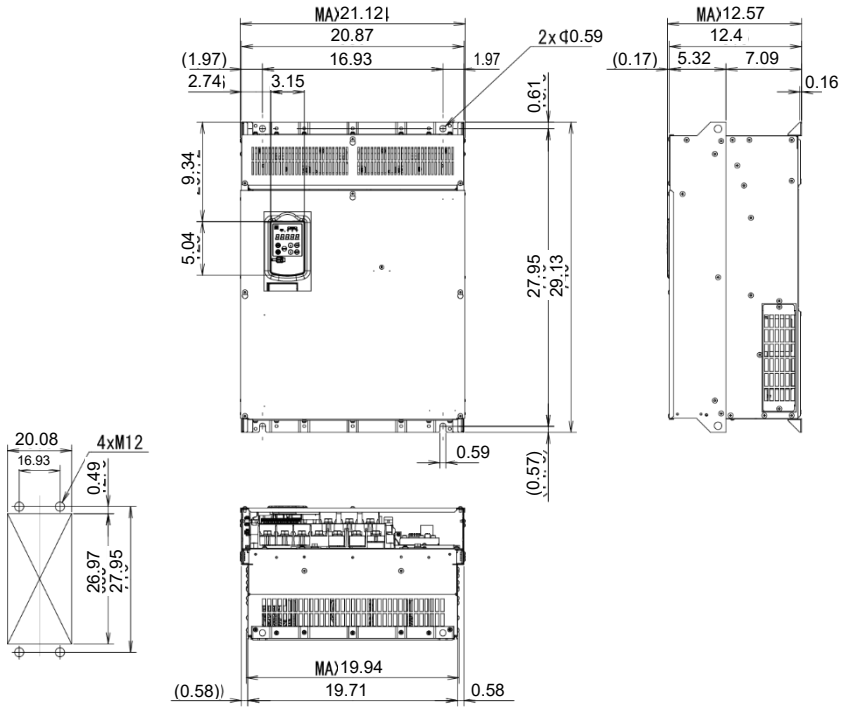

Panel cutout size drawing for external cooling installation

Fig. 13.1-38

(Unit: inches)

■ **FRN0376G2S-4G, FRN0431G2S-4G**

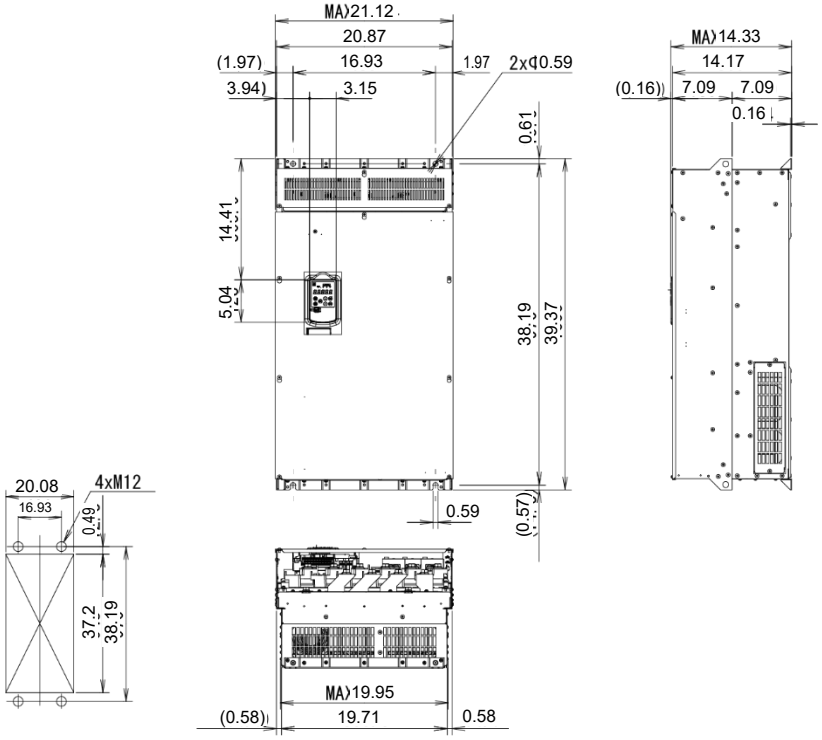

Panel cutout size drawing for external cooling installation

Fig. 13.1-39

■ **FRN0547G2S-4G, FRN0610G2S-4G**

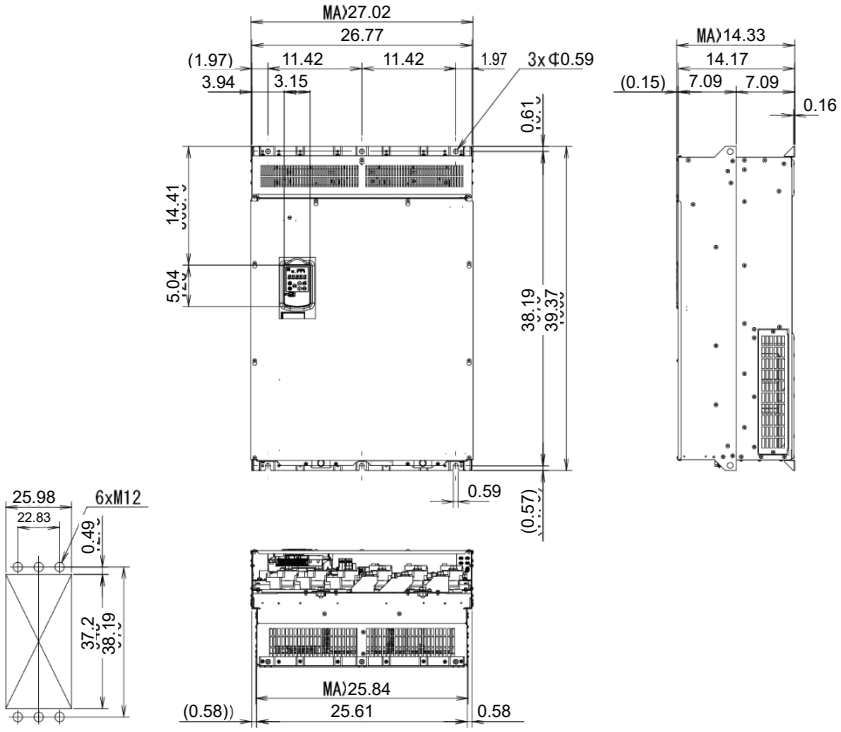

Panel cutout size drawing for external cooling installation

Fig. 13.1-40

(Unit: inches)

■ **FRN0739G2S-4G, FRN0840G2S-4G**

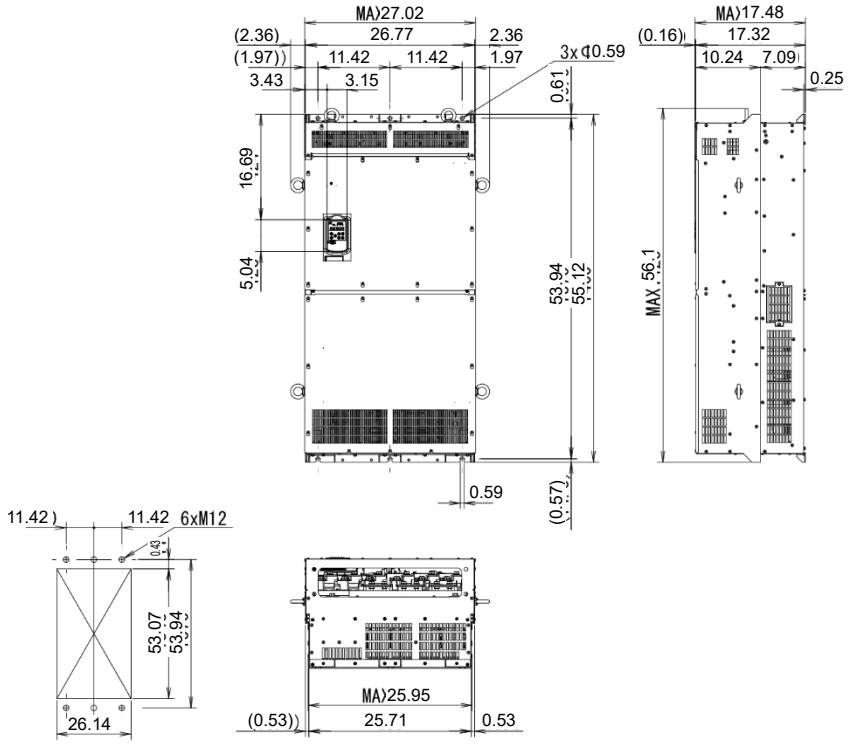

Panel cutout size drawing for external cooling installation

Fig. 13.1-41

■ **FRN1039G2S-4G, FRN1169G2S-4G**

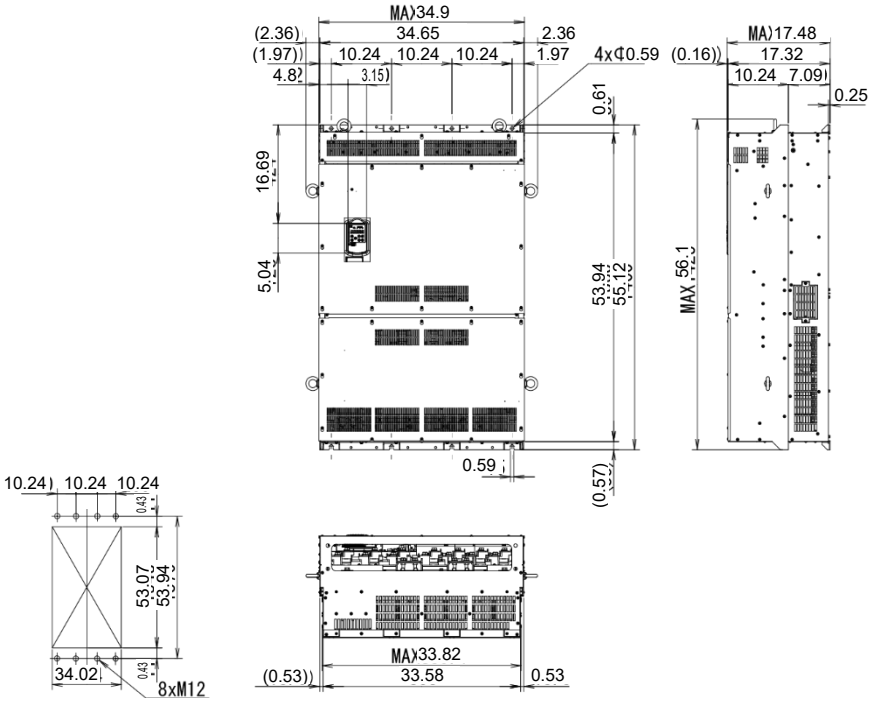

Panel cutout size drawing for external cooling installation

Fig. 13.1-42

(Unit: inches)

■ **FRN1385G2S-4G, FRN1480G2S-4G**

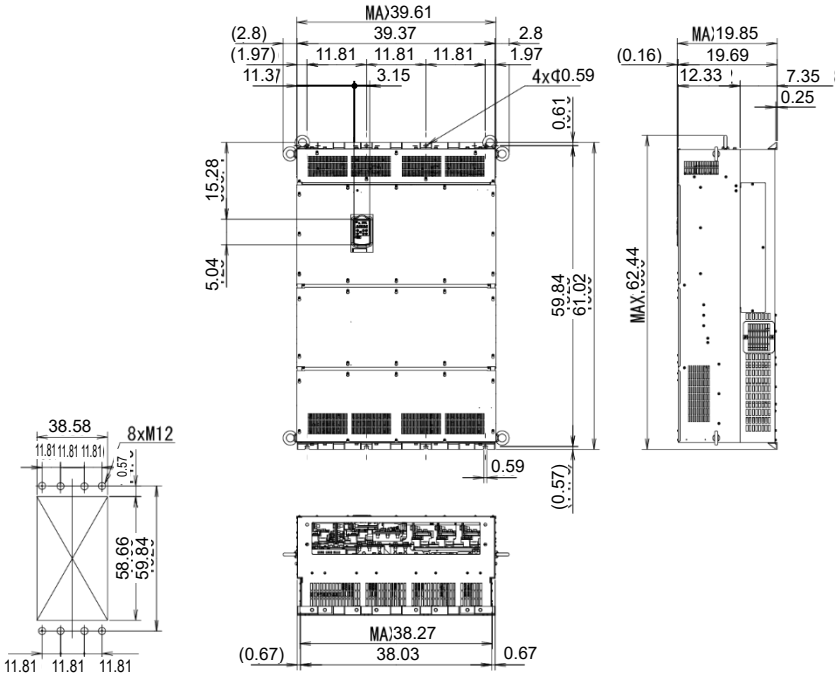

Panel cutout size drawing for external cooling installation

Fig. 13.1-43

13.2 Keypad

(Unit: mm)

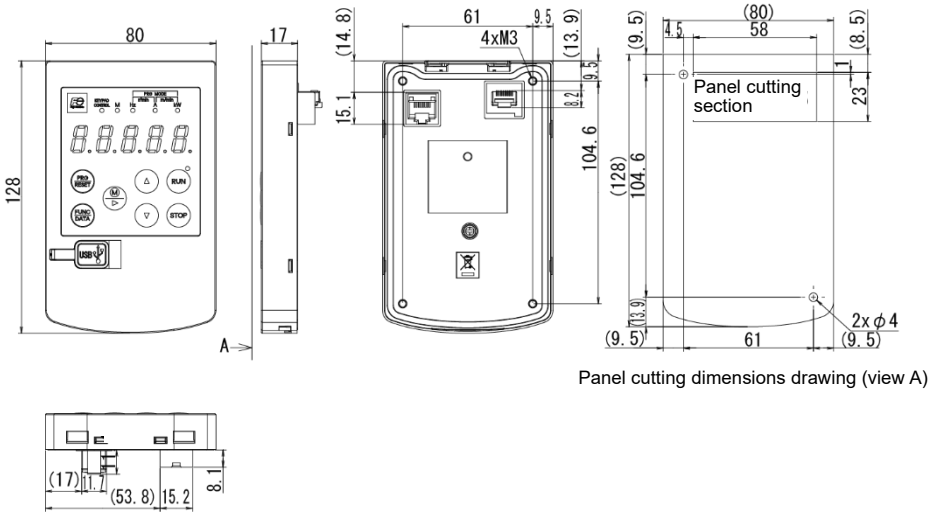

Panel cutting dimensions drawing (view A)

Fig. 13.2-1

(Unit: inches)

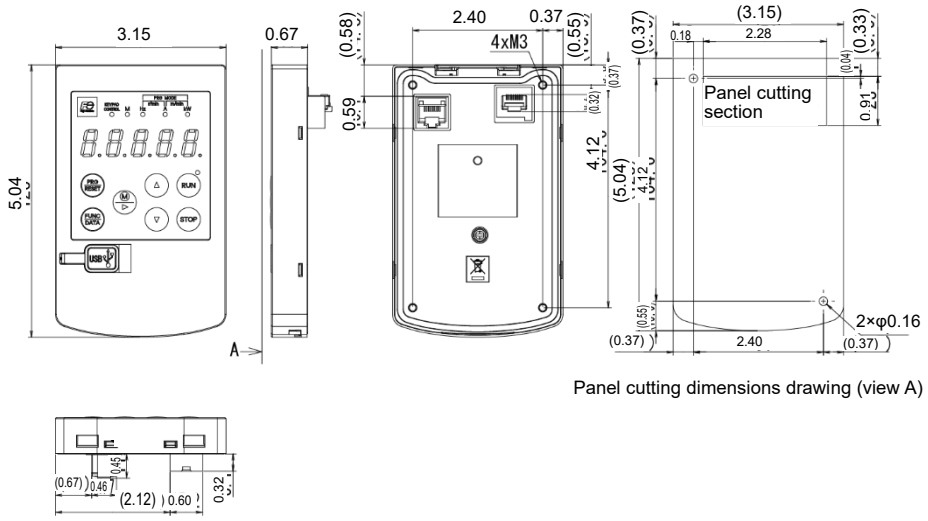

Panel cutting dimensions drawing (view A)

Fig. 13.2-2

APPENDICES

Contents

Appendix A Trouble-free Use of Inverters (Notes on Electrical Noise) ····· 1
A.1 Effect of inverters on other devices ····· 1
[1] Effect on AM radios ····· 1
[2] Effect on telephones ····· 1
[3] Effect on pressure sensors ····· 1
[4] Effect on position detectors (pulse encoders) ····· 1
[5] Effect on proximity switches ····· 1
A.2 Noise ····· 2
[1] Inverter Operating Principle and Noise ····· 2
[2] Types of noise ····· 3
A.3 Measure ····· 5
[1] Noise prevention prior to installation ····· 5
[2] Implementation of noise prevention measures ····· 6
[3] Noise prevention examples ····· 9
Appendix B Japanese Guideline for Suppressing Harmonics by Customers Receiving High Voltage or Special High Voltage (General-purpose Inverters) ····· 13
B.1 Application of general-purpose inverters ····· 13
[1] Application for Other Than Special Customers ····· 13
[2] Application for "Guideline for Suppressing Harmonics by Customers Receiving High Voltage or Special High Voltage" ····· 13
B.2 Complying with "Guideline for Suppressing Harmonics by Customers Receiving High Voltage or Special High Voltage" ····· 15
[1] Calculation of equivalent capacity (Pi) ····· 15
[2] Harmonic Current Calculation ····· 16
[3] Examples of calculation ····· 18
Appendix C Effect on Insulation of General-purpose Motors Driven with 400 V Class Inverters ····· 19
C.1 Generating mechanism of surge voltages ····· 19
C.2 Effect of surge voltages ····· 20
C.3 Countermeasures against surge voltages ····· 21
[1] Suppressing surge voltages ····· 21
[2] Using motors with enhanced insulation ····· 21
C.4 Regarding existing equipment ····· 21

[1] In case of a motor being driven with 400 V class inverter ····· 21
[2] In case of an existing motor driven using a newly installed 400 V class inverter ····· 21
Appendix D Inverter Generating Loss ····· 22
Appendix E Conversion to other than SI Units ····· 23
E.1 Conversion of units ····· 23
E.2 Calculation formulas ····· 24
Appendix F Permissible Current of Insulated Wires ····· 25
Appendix G Conformity with Standards ····· 28
G.1 Compliance with European Standards (CE) ····· 28
[1] Compliance with EMC standards ····· 28
[2] Compliance with European Low Voltage Directive ····· 33
G.2 Harmonic Component Regulations in EU ····· 44
[1] General comments ····· 44
[2] Compliance with the harmonic component regulation ····· 44
G.3 Compliance with UL Standards and Canadian Standards (cUL certification) ····· 45
[1] General comments ····· 45
[2] UL Standards and Canadian Standards (cUL Certification) Compatibility ····· 45
G.4 Compliance with Functional Safety Standards ····· 53
[1] General ····· 53
[2] Notes for compliance with functional safety standards ····· 55
[3] Inverter output status when STO is activated ····· 56
[4] EcF alarm and inverter-output status ····· 57
[5] Precautions for releasing STO ····· 58
Appendix H Inverter Replacement Precautions (When Using PWM Converter (RHC series)) ····· 59
H.1 Applicable inverters ····· 59
H.2 Changing the connection method (inverter control power auxiliary input terminals (R0, T0)) ····· 60

Appendix A Trouble-free Use of Inverters (Notes on Electrical Noise)

Excerpt from technical material of
the Japan Electrical Manufacturers' Association (JEMA) (December 2008)

A.1 Effect of inverters on other devices

Inverters have been and are rapidly expanding its application fields. This paper describes the effect that inverters have on electronic devices already installed or on devices installed in the same system as inverters, as well as introducing noise prevention measures. (Refer to "A.3 [3] Noise prevention examples" for details.)

[1] Effect on AM radios

Phenomenon: If an inverter operates, AM radios may pick up noise radiated from the inverter. (An inverter has almost no effect on FM radios or television sets.)

Probable cause: The noise radiated from the inverter may be received by a radio.

Measure: Inserting a noise filter on the power supply side of the inverter is effective.

[2] Effect on telephones

Phenomenon: If an inverter operates, nearby telephones may pick up noise radiated from the inverter in conversation so that it may be difficult to hear.

Probable cause: A high-frequency leakage current radiated from the inverter and motors enters shielded telephone cables, causing noise.

Measure: It is effective to commonly connect the grounding terminals of the motors and return the common grounding line to the grounding terminal of the inverter.

[3] Effect on pressure sensors

Phenomenon: If an inverter operates, pressure sensors may malfunction.

Probable cause: Noise may penetrate through a grounding wire into the signal line.

Measure: It is effective to install a noise filter on the power supply side of the inverter or to change the wiring.

[4] Effect on position detectors (pulse encoders)

Phenomenon: If an inverter operates, pulse encoders may produce erroneous pulses that shift the stop position of a machine.

Probable cause: Erroneous pulses are liable to occur when the signal lines of the PG and power lines are bundled together.

Measure: The influence of induction noise and radiated noise can be reduced by separating the PG signal lines and power lines. Providing noise filters at the input and output terminals is also an effective measure.

[5] Effect on proximity switches

Phenomenon: If an inverter operates, proximity switches (capacitance-type) may malfunction.

Probable cause: The capacitance-type proximity switches may provide inferior noise immunity.

Measure: It is effective to connect a filter to the input terminals of the inverter or change the power supply treatment of the proximity switches. The proximity switches can be replaced with superior noise immunity types such as magnetic types.

A.2 Noise

This section gives a summary of noises generated in inverters and their effects on devices subject to noise.

[1] Inverter Operating Principle and Noise

Fig. A.2-1 shows an Outline of inverter configuration. The inverter converts AC to DC (rectification) in a converter unit, and converts DC to AC (inversion) with 3-phase variable voltage and variable frequency. The conversion (inversion) is performed by PWM implemented by switching six transistors (IGBT: Insulated Gate Bipolar Transistor, etc.), and is used for variable speed motor control.

Switching noise is generated by high-speed on/off switching of the six transistors. Noise current (i) is emitted and at each high-speed on/off switching, the noise current flows through stray capacitance (C) of the inverter, cable and motor to the ground. The amount of the noise current is expressed as follows:

$$i = C \cdot dv/dt$$

It is related to the stray capacitance (C) and dv/dt (switching speed of the transistors). Further, this noise current is related to the carrier frequency since the noise current flows each time the transistors are switched on or off.

Noise is generated by the DC/DC power supply converter for the control circuit during transistor switching.

These noise frequency bands extend across several tens of MHz, and may interfere with communication devices such as AM radios, factory wireless networks, and telephones.

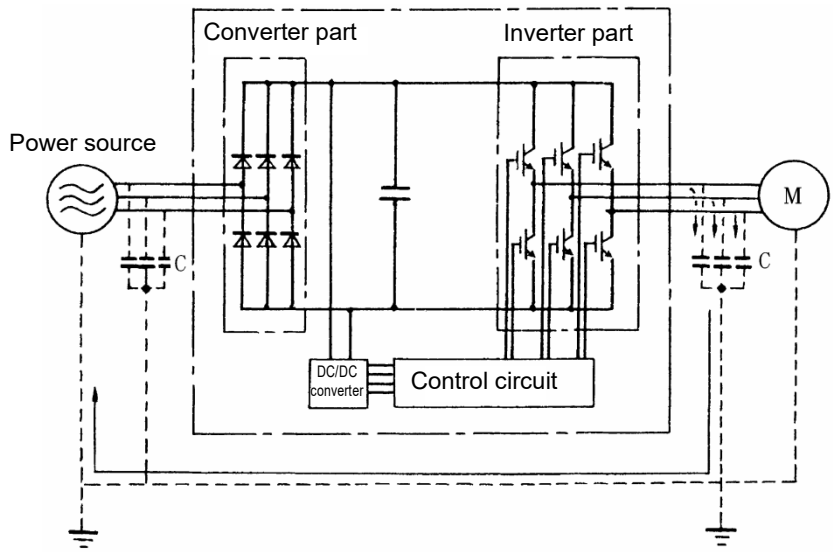

Fig. A.2-1 Outline of inverter configuration

[2] Types of noise

Noise generated in an inverter is propagated through the main circuit wiring to the power supply and the motor so as to affect a wide range of applications from the power supply transformer to the motor. The various propagation routes are shown in Fig. A.2-2. According to those routes, noises are roughly classified into three types:

(1) to (3) are conducted noise, (4) is induction noise, and (5) is radiated noise. Details are given below.

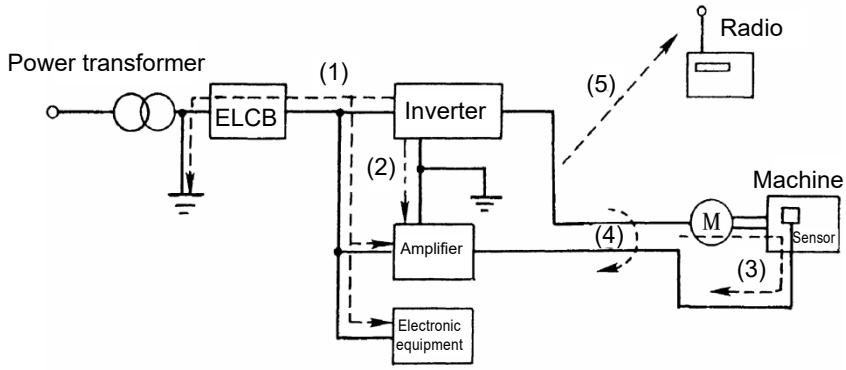

Fig. A.2-2 Noise propagation routes

(1) Conducted noise

The noise that has occurred in the inverter and propagates through a conductor to influence peripheral equipment is called conducted noise. Some conducted noise will propagate through the main circuit (1). If the ground wires are connected to a common ground, conducted noise will propagate through route (2). As shown in route (3), some conducted noise will propagate through signal lines or shielded wires.

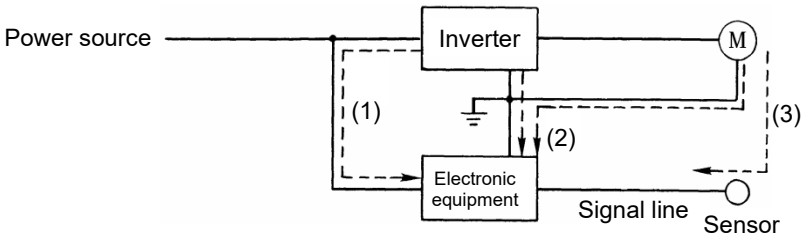

Fig. A.2-3 Conducted noise

(2) Induction noise

When wires or signal lines of peripheral devices are brought close to the wires on the input and output sides of the inverter through which noise current is flowing, noise will be induced into those wires and signal lines of the devices by electromagnetic induction (Fig. A.2-4) or electrostatic induction (Fig. A.2-5). This is called “induction noise” (4).

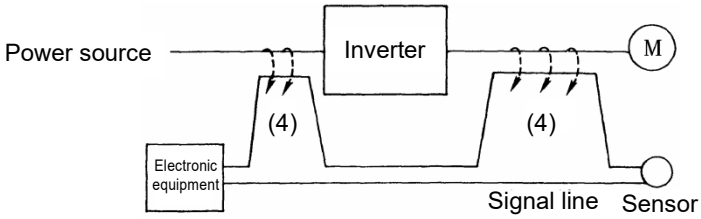

Fig. A.2-4 Electromagnetic induction noise

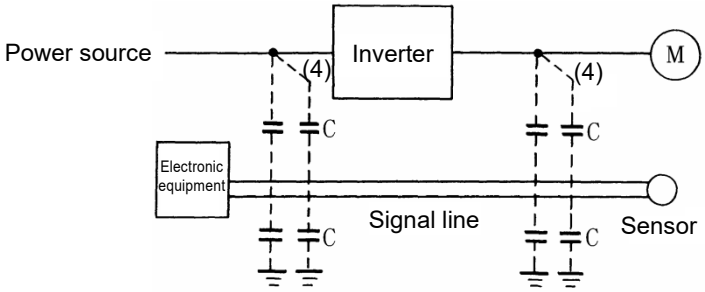

Fig. A.2-5 Electrostatic induction noise

(3) Radiated noise

Noise generated in an inverter radiates through the air with input side and output side main circuit wires, and ground wires acting as antennas, and this affects peripheral devices, as well as broadcast and wireless communication. This noise is called “radiated noise” as shown below as (5). Not only wires but motor frames or control system panels containing inverters may also act as antennas.

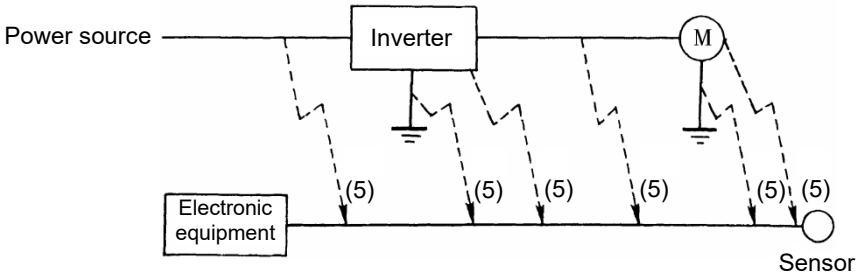

Fig. A.2-6 Radiated noise

A.3 Measure

As the noise prevention is strengthened, the more effective it is. However, with the use of appropriate measures, noise problems may be resolved easily. It is necessary to implement economical noise prevention according to the noise level and the equipment conditions.

[1] Noise prevention prior to installation

Before installing an inverter in your control panel or installing an inverter panel, you need to consider noise prevention. Once noise problems occur, it will cost additional materials and time for solving them.

Noise prevention prior to installation includes:

(1) Separate the main circuit from the control circuit.

(2) Accommodate the main circuit wiring in a metal pipe (conduit pipe).

(3) Use shielded wire or twisted shielded wire in the control circuit.

(4) Perform reliable grounding work and wiring.

These noise prevention measures can avoid most noise problems.

[2] Implementation of noise prevention measures

There are two types of noise prevention measures--one for noise propagation routes and the other for noise receiving sides (that are affected by noise).

The basic measures for reducing the effect of noise at the receiving side include:

(1) Separating the main circuit wiring from the control circuit wiring, avoiding noise effect.
Measures on the noise-affected side are:

(2) Lower the noise level for example by installing a noise filter.

(3) Suppress the noise level for example by using a metal wiring pipe or metal control panel.

(4) Block the noise propagation route for example by using an insulation transformer for power source.

Table A.3-1 lists the Noise prevention measures, their goals, and propagation routes.

Table A.3-1 Noise prevention measures

Noise prevention method		Goal of noise prevention measures				Propagation route		
		Make it more difficult to receive noise	Cutoff noise propagation	Contain noise	Reduce noise level	Conducted noise	Induction noise	Radiated noise
Wiring and installation	Separate main circuit from control circuit	Y					Y	
	Minimize wiring length	Y			Y		Y	Y
	Avoid parallel and bundled wiring	Y					Y	
	Use appropriate grounding	Y			Y		Y	Y
	Use shielded wire and twisted shielded wire	Y					Y	Y
	Use shielded cable in main circuit			Y				Y
	Use metal conduit pipe			Y			Y	Y
Control panel	Appropriate arrangement of devices in panel	Y					Y	Y
	Metal control panel			Y			Y	Y
Anti-noise devices	Line filter	Y			Y	Y		Y
	Insulation transformer		Y			Y		Y
Measures taken on noise-affected side	Use a decoupling capacitor for control circuit	Y					Y	Y
	Use ferrite core for control circuit	Y					Y	Y
	Line filter	Y				Y		
Other IMs	Separate power supply systems	Y	Y			Y		
	Lower the carrier frequency				Y	Y	Y	Y

In the table, a column marked with Y shows a measure expected to produce an effect depending on the conditions. An empty column shows an ineffective measure.

What follows is noise prevention measures for the inverter drive configuration.

(1) Wiring and grounding

As shown in Fig. A.3-1, separate the main circuit wiring from control circuit wiring as far as possible regardless of being located inside or outside the system control panel containing an inverter. Use shielded wires and twisted shielded wires that will block out extraneous noises, and minimize the wiring distance. Also avoid bundled wiring of the main circuit and control circuit or parallel wiring.

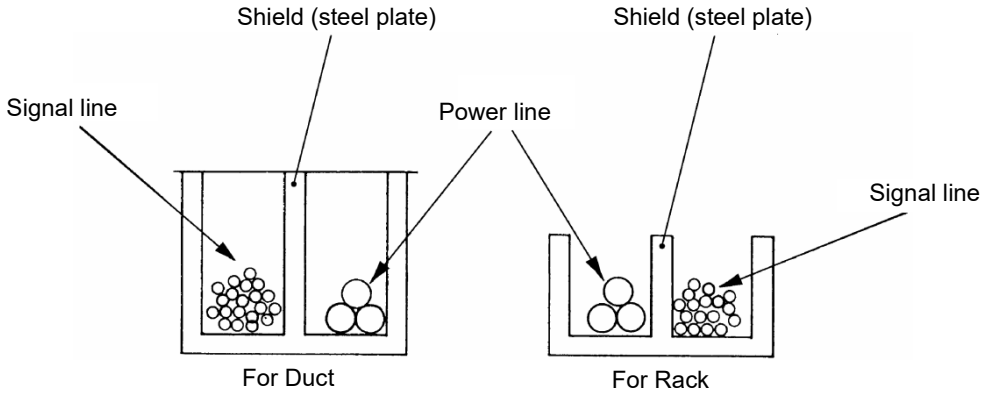

Fig. A.3-1 Separate wiring

For the main circuit wiring, use a metal conduit pipe and connect its wires to the ground to prevent noise propagation (see Fig. A.3-2).

The shield (braided wire) of a shielded wire should be securely connected to the base (common) side of the signal line at only one point to avoid the loop formation resulting from a multi-point connection (see Fig. A.3-3).

The grounding is effective not only to reduce the risk of electrical shocks due to leakage current, but also to block noise penetration and radiation. Corresponding to the main circuit voltage, the grounding work should be Class D (300 VAC or less) and Class C (300 to 600 VAC). Each ground wire is to be provided with its own ground or separately wired to a grounding point.

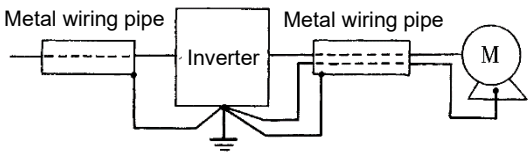

Fig. A.3-2 Grounding of metal conduit pipe

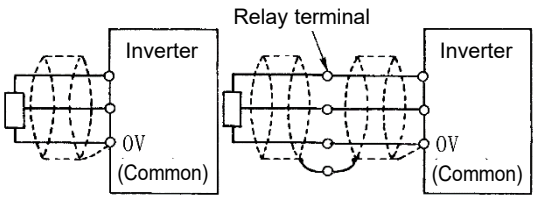

Fig. A.3-3 Treatment of braided wire of shielded wire

(2) Control panel

The system control panel containing an inverter is generally made of metal, which can shield noise radiated from the inverter itself.

When installing other electronic devices such as a programmable logic controller in the same control panel, be careful with the layout of each device. If necessary, arrange shield plates between the inverter and peripheral devices.

(3) Anti-noise devices

To reduce the noise propagated through the electrical circuits and the noise radiated from the main circuit wiring to the air, a line filter and power supply transformer should be used (see Fig. A.3-4).

Line filters are classified into simple-type filters including capacitive filters to be connected in parallel to a power line and inductive filters to be connected in series to a power line and authentic filters (LC filters) to address radio noise restrictions. They are used selectively used to meet the target noise reduction effect. Power transformers include generally used insulation transformers, shield transformers and noise-cut transformers, which have different effects to block propagation of noise.

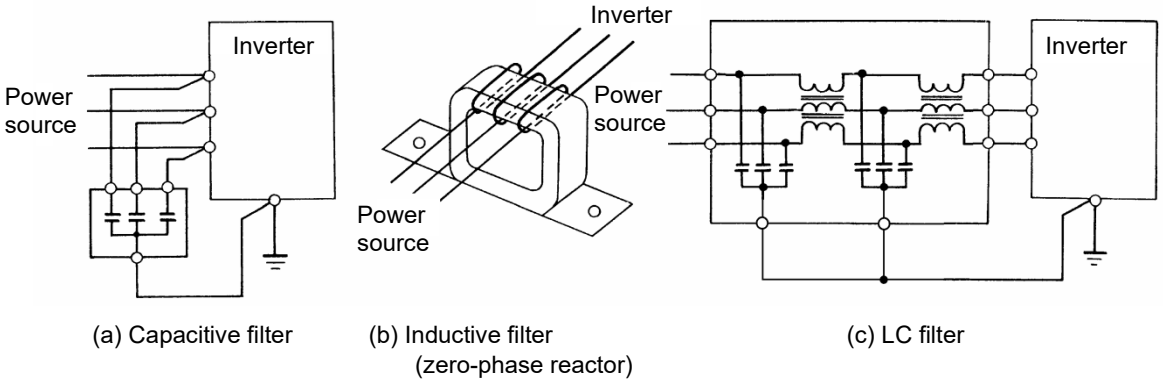

(a) Capacitive filter (b) Inductive filter (zero-phase reactor) (c) LC filter

Fig. A.3-4 Various filters and their connection

(4) Noise prevention measures at the receiving side

It is important to strengthen the noise immunity of those electronic devices installed in the same control panel as the inverter or located near an inverter. Line filters and shielded or twisted shielded wires are used to block the penetration of noise in the signal lines of these devices. The following treatments are also implemented.

1) Lower the circuit impedance by connecting capacitors or resistors to the input and output terminals of the signal circuit in parallel.

2) Increase the circuit impedance for noise by inserting choke coils in series in the signal circuit or passing signal lines through ferrite core beads.

It is also effective to widen the signal base lines (0 V line) or grounding lines.

(5) Other IMs

The level of generating/propagating noise will change with the carrier frequency of the inverter. The higher the carrier frequency, the higher the noise level.

In an inverter whose carrier frequency can be changed, lowering the carrier frequency can reduce the generation of electrical noise and result in a good balance with the audible noise of the motor under driving conditions.

[3] Noise prevention examples

Table A.3-2 lists examples of the measures to prevent noise generated by a running inverter.

Table A.3-2 Examples of noise prevention measures

No.	Target device	Phenomenon	Measure	Notes
1	AM radio	Noise enters the AM radio broadcast (500 to 1500 kHz) when the inverter is operated. 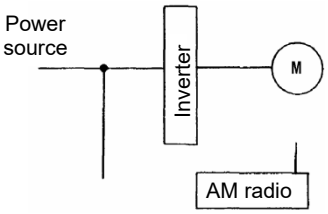 <Possible cause> Radiated noise from the power source and output wiring of inverted was received by the AM radio.	1) Install an LC filter at the power supply side of the inverter. (In some cases, a capacitive filter may be used as a simple method.) 2) Install a metal conduit wiring between the motor and inverter. Or use shielded wiring. 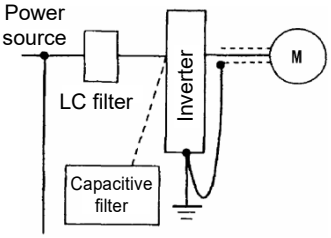 Note: Minimize the distance between the LC filter and the inverter (within 1 m).	1) The radiated noise of the wiring can be reduced. 2) Reduce the conducted noise to the power source or apply shielded wiring. Or use shielded wiring. Note: Sufficient improvement may not be expected in narrow regions such as between mountains.
2	AM radio	Noise enters the AM radio broadcast (500 to 1500 kHz) when the inverter is operated. 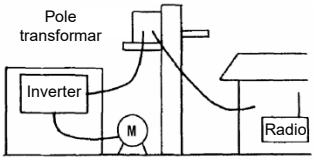 <Possible cause> Radiated noise from the power line of inverter's power source was received by the AM radio.	1) Install inductive filters at the input and output sides of the inverter. 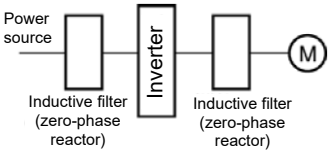 The number of turns of the zero-phase reactor (or ferrite ring) should be as large as possible. Minimize the distance between the inverter and the inductive filter (within 1 m). 2) When further improvement is necessary, install LC filters. 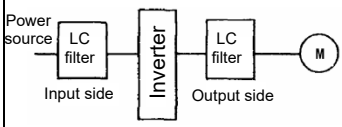 	1) The radiated noise of the wiring can be reduced.

Table A.3-2 Examples of noise prevention measures (cont.)

No.	Target device	Phenomenon	Measure	Notes
3	Telephone (in a common private residence at a distance of 40 m)	When driving a ventilation fan with an inverter, noise enters a telephone in a private residence at a distance of 40 m. 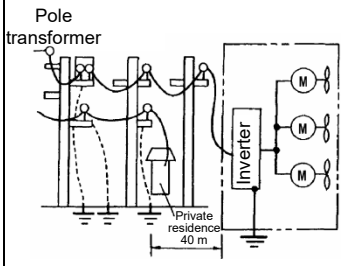 <Possible cause> High-frequency leak current of the inverter and motor flows into the shielded ground of the telephone cable on the way back via the ground of the pole transformer to cause noise by electrostatic induction.	1) Connect the ground terminals of the motors in a common connection. Return to the inverter panel, and insert a 1 μF capacitor between the input terminal of the inverter and ground. 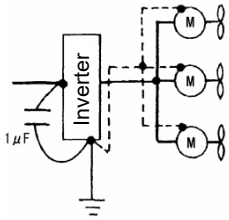 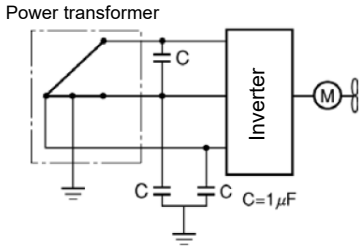 	1) The effect of the inductive filter and LC filter may not be expected because of sound frequency component. 2) In the case of a V-connection power supply transformer in a 200 V system, it is necessary to connect capacitors as shown in the following figure, because of different potentials to ground.
4	Photoelectric relay	A photoelectric relay malfunctioned when the inverter runs the motor. (The inverter and motor are installed in the same place (for overhead traveling)). 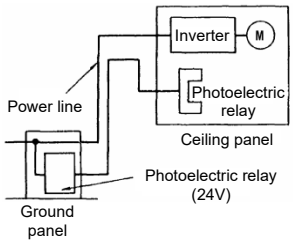 <Possible cause> Input power line of the inverter and wiring of the photoelectric relay run parallel for 30 to 40 m with a spacing of about 25 mm, which invites induction noise. Due to conditions of the installation, these lines cannot be separated.	1) As a temporary measure, Insert a 0.1 μF capacitor between the 0 V terminal of the power supply circuit in the detection unit of the overhead photoelectric relay and a frame of the overhead panel. 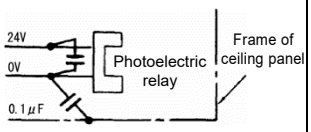 2) As a permanent measure, move the 24 V power supply from the ground to the overhead unit so that signals are sent to the ground side with relay contacts in the ceiling part.	1) Separate the wiring (30 cm or more) 2) When separation is impossible, signals can be received and sent with dry contacts etc. 3) Do not wire low-current signal lines and power lines in parallel.

Table A.3-2 Examples of noise prevention measures (cont.)

No.	Target device	Phenomenon	Measure	Notes
5	Photoelectric relay	A photoelectric relay malfunctioned when the inverter runs the motor. 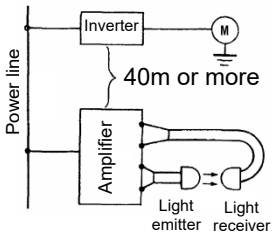 <Possible cause> While the inverter is sufficiently away from the photoelectric relay, the power source is connected in common. Conducted noise has entered from the power source line.	1) Insert a 0.1 μF capacitor between the output common terminal of the amplifier of the photoelectric relay and the frame. 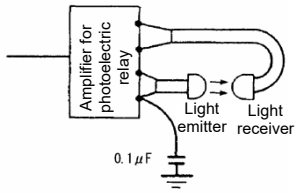 	1) If a low-current circuit at the malfunctioning side is observed, the measures may be simple and economical.
6	Proximity switch (capacitance type)	A proximity switch malfunctioned. 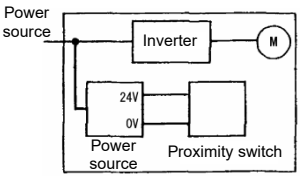 <Possible cause> The electrostatic capacitive proximity switch has a low noise immunity, and is vulnerable to circuit conducted noise and radiated noise.	1) Install an LC filter at the output side of the inverter. 2) Install a capacitive filter at the input side of the inverter. 3) Ground the 0 V (common) line of the DC power supply of the proximity switch through a capacitor to the box body of the machine. 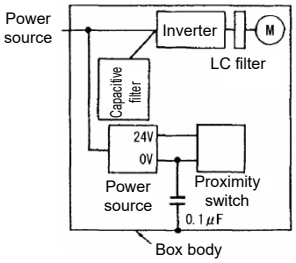 	1) Noise generated in the inverter can be reduced. 2) The switch is superseded by a proximity switch of superior noise immunity (such as a magnetic type).

Table A.3-2 Examples of noise prevention measures (cont.)

No.	Target device	Phenomenon	Measure	Notes
7	Pressure sensor	A pressure sensor malfunctioned. 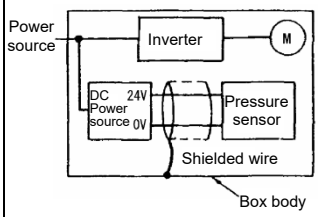 <Possible cause> Noise enters from the box body via the shielded wire to cause malfunctioning of the pressure sensor.	1) Install an LC filter on the input side of the inverter. 2) Connect the shield of the shielded wire of the pressure sensor to the 0 V line (common) of the pressure sensor, changing the original connection. 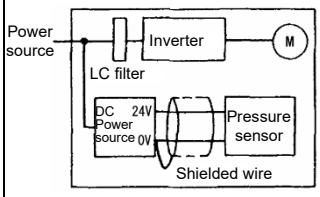 	1) The shielded parts of shield wires for sensor signals are connected to a common point in the system. 2) Conductive noise from the inverter can be reduced.
8	Position detector (pulse encoder)	Erroneous-pulse outputs from a pulse converter caused a shift in the stop position of a crane. 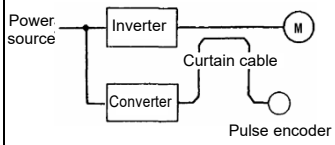 <Possible cause> The motor power line and the signal line for the encoder are wired together in a bundle. This produces induction noise to cause output of error pulses.	1) Install an LC filter and a capacitive filter at the input side of the inverter. 2) Install an LC filter at the output side of the inverter. 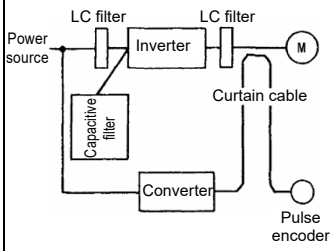 	1) This is an example of a measure where the power line and signal line cannot be separated. 2) Induction noise and radiated noise at the output side of the inverter can be reduced.
9	Programmable logic controller (PLC)	The PLC program sometimes malfunctions. 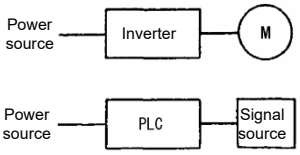 <Possible cause> Power sources of the inverter and PLC are in the same system so that noise enters PLC via the power source.	1) Install a capacitive filter and an LC filter on the input side of the inverter. 2) Install an LC filter on the output side of the inverter. 3) Lower the carrier frequency of the inverter. 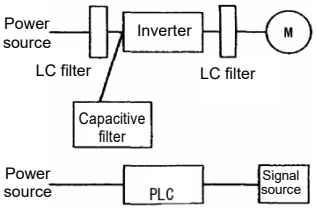 	1) Total conducted noise and induction noise in the electric line can be reduced.

Appendix B Japanese Guideline for Suppressing Harmonics by Customers Receiving High Voltage or Special High Voltage (General-purpose Inverters)

Agency of Natural Resource and Energy of Japan published the following two guidelines for suppressing harmonic noise in September 30, 1994.

(1) "Guideline to Reduce Harmonic Emissions Caused by Electrical and Electronic Equipment for Household and General Use"

(2) "Guideline for Suppressing Harmonics by Customers Receiving High Voltage or Special High Voltage"

These guidelines were enacted based on the assumption that the use of electronic devices generating harmonic current would continue to rise in the future, and that they would lead to the prevention of harmonic interference at devices connected to systems by applying regulations beforehand. These guidelines apply to all electrical and electronic devices used with a commercial power supply and which generate harmonic current, however, the following explanation applies only to "general-purpose inverters".

Refer to “Japan Electrical Manufacturers’ Association JEM-TR201” for details on how to calculate harmonic current.

B.1 Application of general-purpose inverters

[1] Application for Other Than Special Customers

From January 2004, general-purpose inverters (input current of 20A or less) were excluded from the "Guideline to Reduce Harmonic Emissions Caused by Electrical and Electronic Equipment for Household and General Use" (established September, 1994) enacted by the Ministry of Economy, Trade and Industry. Customers for whom the "Guideline for Suppressing Harmonics by Customers Receiving High Voltage or Special High Voltage" does not apply are recommended to connect the "DC reactor" indicated in the catalog or this manual to the inverter as in the past.

[2] Application for "Guideline for Suppressing Harmonics by Customers Receiving High Voltage or Special High Voltage"

All customers receiving high voltage or special high voltage fall under the scope of the "Guideline for Suppressing Harmonics by Customers Receiving High Voltage or Special High Voltage". Devices generating harmonic current such as "general-purpose inverters" are not regulated directly, but for each customer using a power supply. It is necessary to calculate such values as the amount of harmonic current generated by individual devices.

(1) Regulation scope

Generally speaking, regulations apply if the following two conditions are satisfied.

- The device is receiving high or extra-high voltage.
- Converter load "equivalent capacity" exceeds the standard value (50kVA when receiving 6.6 kV) for the receiving voltage.

If calculating "equivalent capacity" in accordance with the guidelines, a supplementary description is provided in "B.2 [1] Calculation of equivalent capacity (Pi)".

(2) Regulation method

Regulate the size (calculated value) of the harmonic current flowing from the customer's power receipt point to the system. Regulation values are proportional to contracted demand. Guideline regulation values are shown in Table B.1-1.

If calculating "harmonic current" in accordance with the guidelines, a supplementary description is provided in "B.2 Complying with "Guideline for Suppressing Harmonics by Customers Receiving High Voltage or Special High Voltage"".

Table B.1-1 Harmonic outflow current upper limit per 1kW of contracted demand (mA/kW)

Receiving voltage	5th	7th	11th	13th	17th	19th	23rd	25th and above
6.6 kV	3.5	2.5	1.6	1.3	1.0	0.90	0.76	0.70
22 kV	1, 8	1.3	0.82	0.69	0.53	0.47	0.39	0.36

(3) Inspection interval

The guideline has been applied.

The estimation for “Voltage distortion factor” required as the indispensable conditions when entering into the consumer’s contract of electric power is already expired.

B.2 Complying with "Guideline for Suppressing Harmonics by Customers Receiving High Voltage or Special High Voltage"

If performing calculations for "general-purpose inverters" in accordance with the guidelines, do so as follows.
The following descriptions are based on “Application Guide for Evaluation of Harmonic Currents Emitted by Consumers of Middle or High Voltage Power Supply” (JEAG 9702-2013) published by the Japan Electrical Manufacturer’s Association (JEMA).

[1] Calculation of equivalent capacity (Pi)

Equivalent capacity is calculated by multiplying the (input rated capacity) by (conversion factor), however, the input rated capacity value is not indicated in previous general-purpose inverter catalogs, and is therefore described below.

(1) “Inverter rated capacity” corresponding to “Pi”

- In the guidelines, a 6-pulse converter is used as a reference for conversion factor 1, and therefore it is necessary to express the general-purpose inverter input rated capacity as a value including the harmonic current equivalent to conversion factor 1.
- In particular, calculate the input fundamental current I1 from the kW rating and efficiency of the motor and the efficiency of the inverter as loads and then calculate:
  Input rated capacity= √3 x (power voltage) x I1 x 1.0228/1000 (kVA). 1.0228 is the 6-pulse converter (effective value current)/(fundamental harmonic current) value.
- When a general-purpose motor or inverter motor is used, the appropriate value shown in Table B.2-1 can be used. Select a value based on the kW rating of the motor used, irrespective of the inverter type.

Note The "input rated capacity" expressed here can be applied only if performing the calculation indicated in the harmonic guidelines, and cannot be used to select inverter power supply side devices and wiring size, etc., and therefore caution is required.

Refer to manufacturer catalogs or technical material for information on peripheral equipment capacity selection.

Table B.2-1 “Input Rated Capacities” of general-purpose inverters determined by the applicable motor ratings

Applicable motor (kW)		0.1	0.2	0.4	0.75	1.5	2.2	3.7	5.5	7.5	11	15	18.5
Pi (kVA)	200 V	0.22	0.35	0.57	0.97	1.95	2.81	4.61	6.77	9.07	13.1	17.6	21.8
	400 V	0.22	0.35	0.57	0.97	1.95	2.81	4.61	6.77	9.07	13.1	17.6	21.8

Applicable motor (kW)		22	30	37	45	55	75	90	110	132	160
Pi (kVA)	200 V	25.9	34.7	42.8	52.1	63.7	87.2	104	127		
	400 V	25.9	34.7	42.8	52.1	63.7	87.2	104	127	153	183

Applicable motor (kW)		200	220	250	280	315	355	400	450	500	630
Pi (kVA)	200 V										
	400 V	229	252	286	319	359	405	456	512	570	718

(2) “Ki (conversion factor)” size

Depending on whether an optional ACR (AC reactor) or DCR (DC reactor) is used, apply the appropriate conversion factor specified in the appendix to the guideline. The conversion factor sizes are listed in Table B.2-2.

Table B.2-2 “Conversion Factors Ki” for general-purpose inverters determined by reactors

Circuit class	Circuit type		Conversion factor Ki	Main applications
3	Three-phase bridge (capacitor smoothing)	No reactor used	K31 = 3.4	• General-purpose inverters
		Reactor used (AC side)	K32 = 1.8	• Elevators
		Reactor used (DC side)	K33 = 1.8	• Cold air refrigerating machines
		Reactor used (AC, DC side)	K34 = 1.4	• Other equipment in general

Note Some models are equipped with a reactor as a standard accessory.

[2] Harmonic Current Calculation

(1) "Fundamental harmonic current" size

- When you calculate the amount of harmonics according to Table 2 in Appendix of the Guideline, you have to previously know the input fundamental harmonic current.
- Apply the appropriate value shown in Table B.2-3 based on the kW rating of the motor, irrespective of the inverter type or whether a reactor is used.

Note If the input voltage is different, calculate the input fundamental current in inverse proportion to the voltage.

Table B.2-3 "Input fundamental harmonic current" of general-purpose inverters determined by applicable motor ratings

Applicable motor (kW)		0.4	0.75	1.5	2.2	3.7	5.5	7.5	11	15	18.5
Input fundamental harmonic current (A)	200 V	1.62	2.74	5.50	7.92	13.0	19.1	25.6	36.9	49.8	61.4
	400 V	0.81	1.37	2.75	3.96	6.50	9.55	12.8	18.5	24.9	30.7
6.6 kV conversion value (mA)		49	83	167	240	394	579	776	1121	1509	1860

Applicable motor (kW)		22	30	37	45	55	75	90	110	132	160
Input fundamental harmonic current (A)	200 V	73.1	98.0	121	147	180	245	293	357		
	400 V	36.6	49.0	60.4	73.5	89.9	123	147	179	216	258
6.6 kV conversion value (mA)		2220	2970	3660	4450	5450	7450	8910	10850	13090	15640

Applicable motor (kW)		200	220	250	280	315	355	400	450	500	630
Input fundamental harmonic current (A)	200 V										
	400 V	323	355	403	450	506	571	643	723	804	1013
6.6 kV conversion value (mA)		19580	21500	24400	27300	30700	34600	39000	43800	48700	61400

(2) Harmonic current calculation

Generally speaking, harmonic current is calculated using "Table 3 Three-phase bridge (capacitor smoothing)" in "Guidelines - Appendix 2". Refer to Table B.2-4 for the guidelines appendices.

Table B.2-4 Amount of harmonic current generation (%), three-phase bridge (capacitor smoothing)

Degree	5th	7th	11th	13th	17th	19th	23rd	25th
No reactor used	65	41	8.5	7.7	4.3	3.1	2.6	1, 8
Reactor used (AC side)	38	14.5	7.4	3.4	3.2	1.9	1.7	1.3
Reactor used (DC side)	30	13	8.4	5.0	4.7	3.2	3.0	2.2
Reactor used (AC, DC side)	28	9.1	7.2	4.1	3.2	2.4	1.6	1.4

- AC side reactor: 3%
- DC side reactor: Stored energy is equivalent to 0.08 to 0.15 ms (100% load conversion)
- Smoothing capacitor: Stored energy is equivalent to 15 to 30 ms (100% load conversion)
- Load: 100%

$$n_{th} \text{ degree harmonic current (A)} = \text{Fundamental harmonic current (A)} \times \frac{\text{Amount of } n_{th} \text{ degree harmonic current generation (\%)}}{100}$$

The harmonic current for each degree is obtained as follows.

(3) Maximum availability factor

- For a load like elevators, which provides intermittent operation, or a load with a sufficient designed motor rating, reduce the current by multiplying the equation by the “maximum availability factor” of the load.
- According to the Appendix to Guideline, “Maximum availability factor of equipment refers to the ratio of the maximum capacity of the operating equipment to the total capacity of the harmonic generation equipment. Capacity of the operating equipment shall be an average value over 30 minutes.”
- In general, the maximum availability factor is calculated according to this definition, but the standard values shown in Table B.2-5 are recommended for inverters for building equipment, and therefore these values should also be referred to when handling similar equipment.

Table B.2-5 Availability factors of inverters, etc. for building equipment (standard values)

Equipment type	Inverter capacity category	Single inverter availability
Air conditioning systems	200 kW or less	0.55
	Over 200 kW	0.60
Sanitary pumps	-	0.30
Elevators	-	0.25
Refrigerators, freezers	50 kW or less	0.60
UPS (6-pulse)	200 kVA	0.60

Correction coefficient according to contract demand level

Since the total availability factor decreases if the scale of a building increases, the calculation of reduced harmonics with the correction coefficient β defined in Table B.2-6 is permitted.

Table B.2-6 Correction coefficient according to the building scale

Contract demand (kW)	Correction coefficient β
300	1.00
500	0.90
1,000	0.85
2,000	0.80

Note: If the contract demand is between two specified values listed in Table B.2-6, calculate the value by interpolation.

Note: The correction coefficient β is to be determined as a matter of consultation between the customer and electric power company for the customers receiving the electric power over 2000 kW or from the special high voltage lines.

(4) Degree of harmonics to be calculated

The higher the degree of harmonics, the lower the current flows. This is the property of harmonics generated by inverters so that the inverters are covered by “The case not causing a special hazard” of the term 3.(3) in the above Appendix for the 9th or higher degrees of the harmonics.

Therefore, “It is sufficient that the 5th and 7th harmonic currents should be calculated.”

[3] Examples of calculation

(1) Equivalent capacity

Example of loads	Input capacity and No. of inverters	Conversion factor	Equivalent capacity
[Example (1)] 400 V, 3.7 kW, 10 units with AC/DC reactor	4.61 kVA x 10 units	K32 = 1.4	4.61 x 10 x 1.4 = 64.54 kVA
[Example (2)] 400 V, 1.5 kW, 15 units with AC reactor	1.93 kVA x 15 units	K34 = 1.8	1.93 x 15 x 1.8 = 52.65 kVA
	See Table B.2-1	See Table B.2-2	

(2) Harmonic current for every harmonic order

Example 1: 400 V, 3.7 kW, 10 units (with AC reactor), maximum availability factor: 0.55

6.6 kV side fundamental current (mA)	Harmonic current onto 6.6 kV lines (mA)							
394 x 10 = 3940 3940 x 0.55 = 2167	5th (38%)	7th (14.5%)	11th (7.4%)	13th (3.4%)	17th (3.2%)	19th (1.9%)	23rd (1.7%)	25th (1.3%)
	823.5	314.2						
See Table B.2-3 and Table B.2-5	See Table B.2-4							

Example 2: 400 V, 3.7 kW, 15 units (with AC/DC reactor), maximum availability factor: 0.55

6.6 kV side fundamental current (mA)	Harmonic current onto 6.6 kV lines (mA)							
394 x 15 = 5910 5910 x 0.55 = 3250.5	5th (28%)	7th (9.1%)	11th (7.2%)	13th (4.1%)	17th (3.2%)	19th (2.4%)	23rd (1.6%)	25th (1.4%)
	910.1	295.8						
See Table B.2-3 and Table B.2-5	See Table B.2-4							

Appendix C Effect on Insulation of General-purpose Motors Driven with 400 V Class Inverters

Excerpt from technical material of
the Japan Electrical Manufacturers' Association (JEMA) (March 1995)

Preface

When an inverter drives a motor, surge voltages generated by switching the inverter elements are superimposed on the inverter output voltage and applied to the motor terminals. If the surge voltages are too high they may have an effect on the motor insulation and some cases have resulted in damage.

For preventing such cases this document describes the generating mechanism of the surge voltages and countermeasures against them.

Refer to "A.2 [1] Inverter Operating Principle and Noise" for details of the principle of inverter operation.

C.1 Generating mechanism of surge voltages

As the inverter rectifies a commercial power source voltage and smoothes into a DC voltage, the magnitude E of the DC voltage becomes about times that of the source voltage (about 620 V in case of an input voltage of 440 VAC). The peak value of the output voltage is usually close to this DC voltage value.

But, as there exists inductance (L) and stray capacitance (C) in wiring between the inverter and the motor, the voltage variation due to switching the inverter elements causes a surge voltage originating in LC resonance and results in the addition of high voltage to the motor terminals. (See Fig. C.1-1.)

This voltage sometimes reaches up to about twice that of the inverter DC voltage (620 V x 2 = approximately 1,200 V) depending on a switching speed of the inverter elements and wiring conditions.

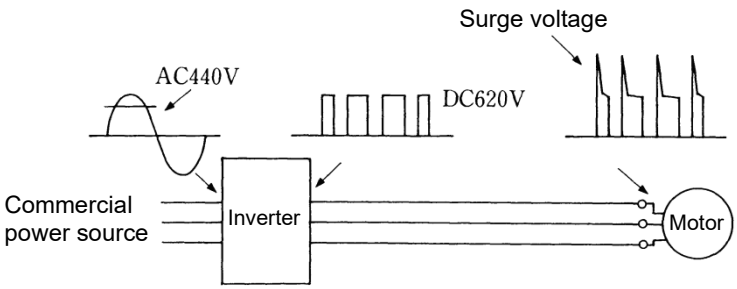

Fig. C.1-1 Voltage waveform of individual portions

A measured example in Fig. C.1-2 illustrates the relation of a peak value of the motor terminal voltage with a wiring length between the inverter and the motor.

From this it can be confirmed that the peak value of the motor terminal voltage ascends as the wiring length increases and becomes saturated at about twice the inverter DC voltage.

The shorter a pulse rise time becomes, the higher the motor terminal voltage rises even in the case of a short wiring length.

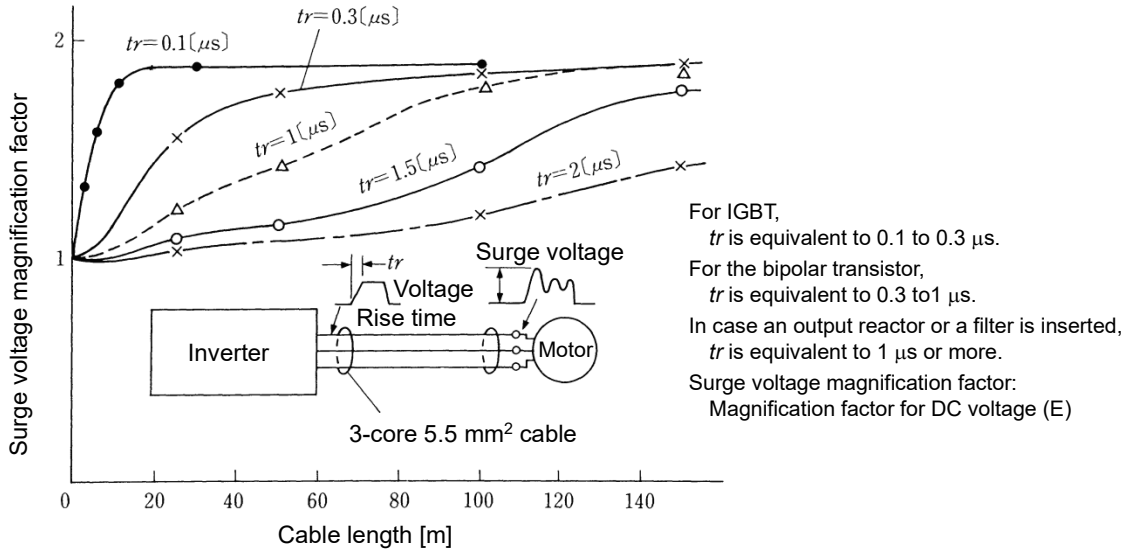

Excerpt from Journal of IEEJ, No. 7, vol. 107, 1987

Fig. C.1-2 Measured example of wiring length and peak value of motor terminal voltage

C.2 Effect of surge voltages

The surge voltages originated in LC resonance of wiring may be applied to the motor terminals and depending on their magnitude sometimes cause damage to the motor insulation.

When the motor is driven with a 200 V class inverter, the dielectric strength of the insulation is no problem even the peak value at the motor terminal voltage increases twice due to the surge voltages (the DC voltage is only about 300 V).

But in case of a 400 V class inverter, the DC voltage is approximately 600 V and depending on the wiring length, the surge voltages may greatly increase and sometimes result in damage to the insulation.

C.3 Countermeasures against surge voltages

When driving a motor with a 400 V class inverter, the following are countermeasures against damage to the motor insulation by the surge voltages.

[1] Suppressing surge voltages

To suppress surge voltage, install a filter on the output side of the inverter allows the peak value of the motor terminal voltage to be reduced. (See Fig. C.3-1)

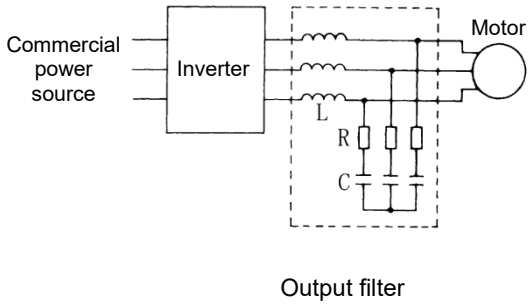

Fig. C.3-1 Method to suppress surge voltage

[2] Using motors with enhanced insulation

Enhanced insulation of a motor winding allows its surge withstanding to be improved.

C.4 Regarding existing equipment

[1] In case of a motor being driven with 400 V class inverter

A survey over the last five years on motor insulation damage due to the surge voltages originating from switching of inverter elements shows that the damage incidence is 0.013% under the surge voltage condition of over 1,100 V and most of the damage occurs several months after commissioning the inverter. Therefore there seems to be little probability of occurrence of motor insulation damage after a lapse of several months of commissioning.

[2] In case of an existing motor driven using a newly installed 400 V class inverter

Contact the motor manufacturer to confirm that it can be driven using the inverter.

Appendix D Inverter Generating Loss

The table below lists the inverter generating loss.

Table D-1

Power system	Inverter type	Inverter generated loss (W)							
		HHD specification		HND specification		HD specification		ND specification	
		Low carrier	High carrier	Low carrier	High carrier	Low carrier	High carrier	Low carrier	High carrier
Three-phase 200 V	FRN0003G2S-2G	35	45	–	–	–	–	–	–
	FRN0005G2S-2G	50	60						
	FRN0008G2S-2G	80	110						
	FRN0011G2S-2G	110	140						
	FRN0018G2S-2G	170	210						
	FRN0032G2S-2G	240	310	290	370				
	FRN0046G2S-2G	300	415	410	520				
	FRN0059G2S-2G	450	620	500	660				
	FRN0075G2S-2G	540	700	630	800				
	FRN0088G2S-2G	660	860	770	970				
	FRN0115G2S -2G	790	1040	1070	1190*1				
	FRN0146G2S-2G	1050	1300	1300	1450*1				
	FRN0180G2S-2G	1300	1550	1500	1650*1				
	FRN0215G2S-2G	1450	1600	1850	1950*1				
	FRN0288G2S-2G	1750	1900	2250	2400*1				
	FRN0346G2S-2G	2300	2550*1	2700	2800*2				
	FRN0432G2S-2G	2750	3050*1	3250	3350*2				
Three-phase 400 V	FRN0002G2□-4G	35	60	–	–	-	-	-	-
	FRN0003G2□-4G	45	80						
	FRN0004G2□-4G	60	110						
	FRN0006G2□-4G	80	140						
	FRN0009G2□-4G	130	230						
	FRN0018G2□-4G	170	300	210	370				
	FRN0023G2□-4G	230	400	300	520				
	FRN0035G2□-4G	300	520	360	610				
	FRN0041G2□-4G	360	610	460	770				
	FRN0045G2□-4G	440	770	510	870				
	FRN0060G2□-4G	510	900	710	1200*1				
	FRN0085G2□-4G	800	1150	1000	1250*1	1000	1250*1	1200	1400*2
	FRN0105G2□-4G	1000	1450	1250	1550*1	1250	1550*1	1350	1600*2
	FRN0139G2□-4G	1100	1600	1350	1700*1	1350	1700*1	1550	1850*2
	FRN0179G2□-4G	1350	1950	1600	2150*1	1600	2150*1	2150	2500*2
	FRN0217G2□-4G	1600	2150*1	2250	2550*2	1950	2250*2	2250	2550*2
	FRN0261G2□-4G	1900	2600*1	2700	3050*2	2300	2600*2	2700	3050*2
	FRN0290G2□-4G	2300	3050*1	3050	3400*2	2700	3050*2	3050	3400*2
	FRN0376G2□-4G	2500	3300*1	3600	4000*2	3100	3450*2	3900	4400*2
	FRN0431G2□-4G	3100	4000*1	4100	4600*2	3900	4400*2	4250	4750*2
	FRN0547G2□-4G	3850	5000*1	5600	6200*2	4250	4750*2	5600	6200*2
	FRN0610G2□-4G	4350	5600*1	6050	6800*2	4850	5500*2	6050	6800*2
	FRN0739G2□-4G	5300	6900*1	6500	7300*2	6000	6750*2	7500	8350*2
	FRN0840G2□-4G	6000	7800*1	7500	8350*2	6500	7300*2	8550	9550*2
	FRN1039G2□-4G	6450	8450*1	9200	10350*2	7500	8350*2	9950	11200*2
	FRN1169G2□-4G	7350	9650*1	9950	11200*2	8550	9550*2	11550	12950*2
	FRN1385G2□-4G	9600	10700*2	11550	12950*2	9950	11200*2	13500	15050*2
	FRN1480G2□-4G	11900	13300*2	13500	15050*2	13500	15050*2	14600	16300*2

(Note) □ in the inverter type is replaced by a letter of the alphabet.

S (basic type), E (type with built-in EMC filter)

Low carrier: 2 kHz

High carrier: FRN0003 to 0115G2S-2G/FRN0002 to 0060G2□-4G: 16 kHz [*1: 10 kHz]

FRN0146 to 0432G2S-2G/FRN0085 to 1480G2□-4G: 15 kHz [*1: 10 kHz, *2: 6 kHz]

Appendix E Conversion to other than SI Units

All expressions given in Chapter 10 “SELECTING OPTIMAL MOTOR AND INVERTER CAPACITIES” are based on SI units (The International System of Units). This section explains how to convert expressions to other units.

E.1 Conversion of units

(1) Force

- 1 [kgf] ≈ 9.8 [N]
- 1 [N] ≈ 0.102 [kgf]

(2) Torque

- 1 [kgf·m] ≈ 9.8 [N•m]
- 1 [N•m] ≈ 0.102 [kgf•m]

(3) Power (energy)

- 1 [kgf•m] ≈ 9.8 [N•m] = 9.8 [J] = 9.8 [W•s]

(4) Power

- 1 [kgf•m/s] ≈ 9.8 [N•m/s] = 9.8 [J/s] = 9.8 [W]
- 1 [N•m/s] ≈ 1 [J/s] = 1 [W] ≈ 0.102 [kgf•m/s]

(5) Rotation speed

- 1 [min^{-1}] = $\frac{2\pi}{60}$ [rad/s] ≈ 0.1047 [rad/s]
- 1 [rad/s] = $\frac{60}{2\pi}$ [min^{-1}] ≈ 9.549 [min^{-1}]

(6) Inertia constant

J [kg•m^2]: moment of inertia

GD^2 [kg·m^2]: flywheel effect

- $GD^2 = 4J$
- $J = \frac{GD^2}{4}$

(7) Pressure, stress

- 1 [mmAq] ≈ 9.8 [Pa] ≈ 9.8 [N/m^2]
- 1 [Pa] ≈ 1 [N/m^2] ≈ 0.102 [mmAq]
- 1 [bar] ≈ 100000 [Pa] ≈ 1.02 [kg•cm^2]
- 1 [kg•cm^2] ≈ 98000 [Pa] ≈ 980 [mbar]
- 1 barometric pressure
  = 1013 [mbar] = 760 [mmHg]
  = 101300 [Pa] ≈ 1.033 [kg/cm^2]

E.2 Calculation formulas

(1) Torque, power, rotation speed

- $P[W] \approx \frac{2\pi}{60} \cdot N[min^{-1}] \cdot \tau\ [N \cdot m]$
- $P\ [W] \approx 1.026 \cdot N\ [min^{-1}] \cdot T\ [kgf \cdot m]$
- $\tau\ [N \cdot m] \approx 9.55 \cdot \frac{P\ [W]}{N\ [min^{-1}]}$
- $T\ [kgf \cdot m] \approx 0.974 \cdot \frac{P\ [W]}{N\ [min^{-1}]}$

(2) Kinetic energy

- $E\ [J] \approx \frac{1}{182.4} \cdot J\ [kg \cdot m^2] \cdot N^2\ [(min^{-1})^2]$
- $E\ [J] \approx \frac{1}{730} \cdot GD^2\ [kg \cdot m^2] \cdot N^2\ [(min^{-1})^2]$

(3) Linear motion load torque

[Driving mode]

- $\tau\ [N \cdot m] \approx 0.159 \frac{V\ [m/min]}{N_M\ [min^{-1}] \cdot \eta_G} \cdot F\ [N]$
- $T\ [kgf \cdot m] \approx 0.159 \frac{V\ [m/min]}{N_M\ [min^{-1}] \cdot \eta_G} \cdot F\ [kgf]$

[Braking mode]

- $\tau\ [N \cdot m] \approx 0.159 \frac{V\ [m/min]}{N_M\ [min^{-1}] / \eta_G} \cdot F\ [N]$
- $T\ [kgf \cdot m] \approx 0.159 \frac{V\ [m/min]}{N_M\ [min^{-1}] / \eta_G} \cdot F\ [kgf]$

(4) Acceleration torque

[Driving mode]

- $\tau\ [N \cdot m] \approx \frac{J\ [kg \cdot m^2]}{9.55} \cdot \frac{\Delta N\ [min^{-1}]}{\Delta t\ [s] \cdot \eta_G}$
- $T\ [kgf \cdot m] \approx \frac{GD^2\ [kg \cdot m^2]}{375} \cdot \frac{\Delta N\ [min^{-1}]}{\Delta t\ [s] \cdot \eta_G}$

[Braking mode]

- $\tau\ [N \cdot m] \approx \frac{J\ [kg \cdot m^2]}{9.55} \cdot \frac{\Delta N\ [min^{-1}] \cdot \eta_G}{\Delta t\ [s]}$
- $T\ [kgf \cdot m] \approx \frac{GD^2\ [kg \cdot m^2]}{375} \cdot \frac{\Delta N\ [min^{-1}] \cdot \eta_G}{\Delta t\ [s]}$

(5) Acceleration time

- $t_{ACC}\ [s] \approx \frac{J_1 + J_2 / \eta_G\ [kg \cdot m^2]}{\tau_M - \tau_L / \eta_G\ [N \cdot m]} \cdot \frac{\Delta N\ [min^{-1}]}{9.55}$
- $t_{ACC}\ [s] \approx \frac{GD_1^2 + GD_2^2 / \eta_G\ [kg \cdot m^2]}{T_M - T_L / \eta_G\ [kgf \cdot m]} \cdot \frac{\Delta N\ [min^{-1}]}{375}$

(6) Deceleration time

- $t_{DEC}\ [s] \approx \frac{J_1 + J_2 \cdot \eta_G\ [kg \cdot m^2]}{\tau_M - \tau_L \cdot \eta_G\ [N \cdot m]} \cdot \frac{\Delta N\ [min^{-1}]}{9.55}$
- $t_{DEC}\ [s] \approx \frac{GD_1^2 + GD_2^2 \cdot \eta_G\ [kg \cdot m^2]}{T_M - T_L \cdot \eta_G\ [kgf \cdot m]} \cdot \frac{\Delta N\ [min^{-1}]}{375}$

Appendix F Permissible Current of Insulated Wires

The tables below list the permissible current of IV wires, HIV wires, and 600 V cross-linked polyethylene insulated wires.

■ IV wire (maximum permissible temperature: 60 °C (140 °F))

Table F-1 (a) Permissible current of insulated wires

Wire size (mm^2)	Permissible current	Aerial wiring					Wire duct wiring (3 wires or less in same duct)			
	Threshold value (30 °C or less) Io (A)	35 °C (Io x 0.91) (A)	40 °C (Io x 0.82) (A)	45 °C (Io x 0.71) (A)	50 °C (Io x 0.58) (A)	55 °C (Io x 0.41) (A)	35 °C (Io x 0.64) (A)	40 °C (Io x 0.57) (A)	45 °C (Io x 0.49) (A)	50 °C (Io x 0.40) (A)
2.0	27	24	22	19	15	11	17	15	13	10
3.5	37	33	30	26	21	15	23	21	18	14
5.5	49	44	40	34	28	20	31	28	24	19
8.0	61	55	49	43	35	24	38	34	30	24
14	88	80	71	62	50	35	56	50	43	35
22	115	104	93	81	66	46	73	65	56	46
38	162	147	132	114	93	66	103	92	80	65
60	217	198	177	153	125	88	138	124	107	87
100	298	272	243	210	172	121	190	170	147	120
150	395	360	322	279	228	161	252	225	195	159
200	469	428	382	331	270	191	299	268	232	189
250	556	507	453	393	321	226	355	317	275	224
325	650	593	530	459	375	265	415	371	321	262
400	745	680	608	526	430	304	476	425	368	301
500	842	768	687	595	486	343	538	481	416	340
2 x 100	497	453	405	351	286	202	317	284	246	200
2 x 150	658	600	537	465	379	268	420	376	325	265
2 x 200	782	713	638	552	451	319	499	446	387	316
2 x 250	927	846	756	655	535	378	592	529	458	374
2 x 325	1083	988	884	765	625	442	692	618	536	437
2 x 400	1242	1133	1014	878	717	507	793	709	614	501
2 x 500	1403	1280	1145	992	810	572	896	801	694	567

■ HIV wire (maximum permissible temperature: 75 °C (167 °F))

Table F-1 (b) Permissible current of insulated wires

Wire size (mm^2)	Permissible current	Aerial wiring					Wire duct wiring (3 wires or less in same duct)			
	Threshold value (30 °C or less) Io (A)	35 °C (Io x0.94) (A)	40 °C (Io x 0.88) (A)	45 °C (Io x 0.81) (A)	50 °C (Io x0.74) (A)	55 °C (Io x 0.66) (A)	35 °C (Io x0.65) (A)	40 °C (Io x0.61) (A)	45 °C (Io x 0.57) (A)	50 °C (Io x0.52) (A)
2.0	33	31	29	26	24	21	21	20	18	17
3.5	45	42	39	36	33	29	29	27	25	23
5.5	60	56	52	48	44	39	39	36	34	31
8.0	74	69	65	59	54	48	48	45	42	38
14	107	100	94	86	79	70	69	65	60	55
22	140	131	123	113	103	92	91	85	79	72
38	198	186	174	160	146	130	128	120	112	102
60	265	249	233	214	196	174	172	161	151	137
100	364	342	320	294	269	240	236	222	207	189
150	483	454	425	391	357	318	313	294	275	251
200	574	539	505	464	424	378	373	350	327	298
250	680	639	598	550	503	448	442	414	387	353
325	796	748	700	644	589	525	517	485	453	413
400	912	857	802	738	674	601	592	556	519	474
500	1,031	969	907	835	762	680	670	628	587	536
2 x 100	608	571	535	492	449	401	395	370	346	316
2 x 150	805	756	708	652	595	531	523	491	458	418
2 x 200	957	899	842	775	708	631	622	583	545	497
2 x 250	1,135	1066	998	919	839	749	737	692	646	590
2 x 325	1,326	1246	1,166	1,074	981	875	861	808	755	689
2 x 400	1,521	1429	1,338	1,232	1,125	1,003	988	927	866	790
2 x 500	1,718	1614	1,511	1,391	1,271	1,133	1,116	1,047	979	893

■ **600 V crosslinked polyethylene insulated wire (maximum permissible temperature: 90 °C (194 °F))**

Table F-3 (c) Permissible current of insulated wires

Wire size (mm^2)	Permissible current	Aerial wiring					Wire duct wiring (3 wires or less in same duct)			
	Threshold value (30 °C or less) Io (A)	35 °C (Io x 0.95) (A)	40 °C (Io x 0.91) (A)	45 °C (Io x 0.86) (A)	50 °C (Io x 0.81) (A)	55 °C (Io x 0.76) (A)	35 °C (Io x0.67) (A)	40 °C (Io x0.63) (A)	45 °C (Io x 0.60) (A)	50 °C (Io x0.57) (A)
2.0	38	36	34	32	30	28	25	23	22	21
3.5	52	49	47	44	42	39	34	32	31	29
5.5	69	65	62	59	55	52	46	43	41	39
8.0	86	81	78	73	69	65	57	54	51	49
14	124	117	112	106	100	94	83	78	74	70
22	162	153	147	139	131	123	108	102	97	92
38	229	217	208	196	185	174	153	144	137	130
60	306	290	278	263	247	232	205	192	183	174
100	421	399	383	362	341	319	282	265	252	239
150	558	530	507	479	451	424	373	351	334	318
200	663	629	603	570	537	503	444	417	397	377
250	786	746	715	675	636	597	526	495	471	448
325	919	873	836	790	744	698	615	578	551	523
400	1,053	1,000	958	905	852	800	705	663	631	600
500	1,190	1,130	1,082	1,023	963	904	797	749	714	678
2 x 100	702	666	638	603	568	533	470	442	421	400
2 x 150	930	883	846	799	753	706	623	585	558	530
2 x 200	1,105	1,049	1,005	950	895	839	740	696	663	629
2 x 250	1,310	1,244	1,192	1,126	1,061	995	877	825	786	746
2 x 325	1,531	1,454	1,393	1,316	1,240	1,163	1,025	964	918	872
2 x 400	1,756	1,668	1,597	1,510	1,422	1,334	1,176	1,106	1,053	1,000
2 x 500	1,984	1,884	1,805	1,706	1,607	1,507	1,329	1,249	1,190	1,130

Appendix G Conformity with Standards

G.1 Compliance with European Standards (CE)

The CE marking on Fuji products indicates that they comply with the essential requirements of the Electromagnetic Compatibility (EMC) Directive, Low Voltage Directive, and Machinery Directive issued by the Council of the European Communities.

Note Keep the ambient temperature to 50°C or less to comply with European standards.
Products with no standards indicated do not comply with European Standards.

Table G.1-1 Compliance standards

	Standards
EMC Directive	EN 61800-3 Immunity: Second environment (Industrial) Emission: Category C2 or C3 (Refer to Table G.1-2. Applicable only when an optional EMC-compliant filter is attached.) : Category C3 (Applicable only to the EMC filter built-in type of inverters)
Low Voltage Directive	Adjustable speed electrical power drive systems. Part 5-1: Safety requirements. Electrical, thermal and energy EN61800-5-1
Machine Directives	EN ISO 13849-1:2015 : Cat.3 PL:e EN 60204-1 : Stop Category 0 EN 61800-5-2 : SIL3 (Functional Safety : STO) EN 62061 : SIL3

* A basic type inverter that does not have a built-in EMC filter complies with the EMC Directive by combining it with an external filter dedicated to Fuji.

Warning

Category C2 : In a domestic environment this product may cause radio interference in which case supplementary mitigation measures may be required.

Category C3: This type of PDS is not intended to be used on a low-voltage public network which supplies domestic premises ; radio frequency interference is expected if used on such a network.

Category C2 and C3 : It has a risk about other equipment malfunction or breakdown by radiated electric field strength out of frequency range that is defined EN 61800-3: 2004 + A1: 2012 2nd Environment and EN/IEC 61800-3: 2018 2nd Environment.

[1] Compliance with EMC standards

The CE marking on inverters does not ensure that the entire equipment including our CE-marked products is compliant with the EMC Directive. Therefore, CE marking for the equipment shall be the responsibility of the equipment manufacturer. For this reason, Fuji's CE mark is indicated under the condition that the product shall be used within equipment meeting all requirements for the relevant Directives. Instrumentation of such equipment shall be the responsibility of the equipment manufacturer.

Generally, machinery or equipment includes not only our products but other devices as well. Manufacturers, therefore, shall design the whole system to be compliant with the relevant Directives.

■ List of EMC-compliant filters

To comply with standards, either use an inverter with built-in EMC filter, or use an inverter with no built-in EMC filter in combination with a dedicated Fuji external filter (option). No matter what the application, please install noise filters using the following recommended installation method. It is recommended that noise filters be installed inside metal cabinets to ensure more reliable compliance with standards.

Tip Our EMC compliance test is performed under the following conditions.
Wiring length (of the shielded cable) between the inverter (EMC filter built-in type) and motor: 5 m

Note To use Fuji inverters in combination with a PWM converter, the basic type of inverters having no built-in EMC filter should be used. Use of an EMC filter built-in type may increase heat of capacitors in the inverter, resulting in damage. In addition, the effect of the EMC filter can no longer be expected.

Table G.1-2 EMC-compliant filters

Power system	Inverter type	Filter type			
		HHD specification	HND specification	HD specification	ND specification
Three-phase 200 V	FRN0003G2S-2G	EFL-0.75SP-2 (*1)	-	-	-
	FRN0005G2S-2G				
	FRN0008G2S-2G	EFL-3.7SP-2 (*1)			
	FRN0011G2S-2G				
	FRN0018G2S-2G				
	FRN0032G2S-2G	EFL-7.5SP-2 (*1)	EFL-7.5SP-2 (*1)		
	FRN0046G2S-2G		EFL-15SP-2 (*1)		
	FRN0059G2S-2G	EFL-15SP-2 (*1)			
	FRN0075G2S-2G				
	FRN0088G2S-2G	EFL-22SP-2 (*1)	EFL-22SP-2 (*1)		
	FRN0115G2S -2G		FS5536-180-40		
	FRN0146G2S-2G	FS5536-180-40	FS5536-250-99-1		
	FRN0180G2S-2G	FS5536-250-99-1			
	FRN0215G2S-2G		FS5536-400-99-1		
	FRN0288G2S-2G	FS5536-400-99-1			
	FRN0346G2S-2G				
	FRN0432G2S-2G		FN3359-600-99		
Three-phase 400 V	FRN0002G2□-4G	FS5536-5-07 (EFL-0.75G11-4)	-	-	-
	FRN0003G2□-4G				
	FRN0004G2□-4G	FS5536-12-07 (EFL-4.0G11-4)			
	FRN0006G2□-4G				
	FRN0009G2□-4G	FS21312-18-07			
	FRN0018G2□-4G	FS5536-35-07 (EFL-7.5G11-4)	FS5536-35-07 (EFL-7.5G11-4)		
	FRN0023G2□-4G				
	FRN0035G2□-4G		FS5536-50-07		
	FRN0041G2□-4G	FS5536-50-07 (EFL-15G11-4)	FS5536-72-07 (EFL-22G11-4)		
	FRN0045G2□-4G	FS5536-72-07 (EFL-22G11-4)			
	FRN0060G2□-4G		FS21312-78-07		
	FRN0085G2□-4G	FS5536-100-35	FS5536-100-35	FS5536-100-35	FS5536-180-40
	FRN0105G2□-4G		FS5536-180-40	FS5536-180-40	
	FRN0139G2□-4G	FS5536-180-40			
	FRN0179G2□-4G				
	FRN0217G2□-4G		FS5536-250-99-1		FS5536-250-99-1
	FRN0261G2□-4G			FS5536-250-99-1	
	FRN0290G2□-4G	FS5536-250-99-1	FS5536-400-99-1		FS5536-400-99-1
	FRN0376G2□-4G			FS5536-400-99-1	
	FRN0431G2□-4G	FS5536-400-99-1			
	FRN0547G2□-4G		FN3359-600-99 (*2)		FN3359-600-99 (*2)
	FRN0610G2□-4G			FN3359-600-99 (*2)	
	FRN0739G2□-4G	FN3359-600-99 (*2)	FN3359-800-99 (*2)		FN3359-800-99 (*2)
	FRN0840G2□-4G			FN3359-800-99 (*2)	
	FRN1039G2□-4G	FN3359-800-99 (*2)	FN3359-1000-99 (*2)		FN3359-1000-99 (*2)
	FRN1169G2□-4G				FN3359-1600-99 (*2)
	FRN1385G2□-4G	FN3359-1000-99 (*2)	FN3359-1600-99 (*2)	FN3359-1000-99 (*2)	
	FRN1480G2□-4G	FN3359-1600-99 (*2)		FN3359-1600-99 (*2)	

(*1) Filter type EFL-□SP-□ : Pass the EMC filter input cables (power cables and grounding cable in a bundle) through the attached ferrite ring reactor for reducing radio noise.

(*2) Emission Category C3

■ Recommended installation method

To make the machinery or equipment fully compliant with the EMC Directive, certified technicians should wire the motor and inverter in strict accordance with the procedure described below.

EMC-compliant filter (option) installation method

(1) Mount the inverter and the filter on a grounded panel or metal plate. Use shielded wires for the motor cable and route the cable as short as possible. Firmly clamp the shields to the metal plate to ground them. Furthermore, connect shields and motor grounding terminals electrically. Use wiring guides to keep the input line away from the output line as far as possible.

For inverters with a capacity of FRN0032 to 0059G2S-2G / FRN0018 to 0035G2□-4G, connect the input grounding wire to the grounding terminal at the front, left-hand side, and the output grounding wire to that on the main circuit terminal block.
(Refer to Fig. G.1-1)

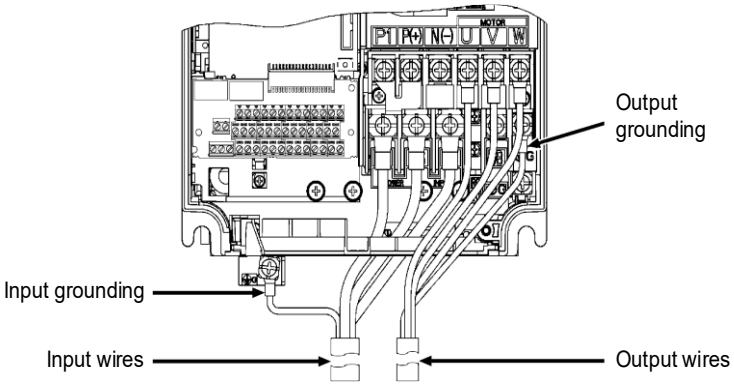

Fig. G.1-1 Wiring for the EMC Filter Built-in Type with a Capacity of FRN0032 to 0059G2S-2G / FRN0018 to 0035G2□-4G

(2) For connection to inverter's control terminals and for connection of the RS-485 communication signal cable, use shielded wires. As with the motor connections, clamp the shields firmly to a grounded panel.

(3) If noise from the inverter exceeds the permissible level, enclose the inverter and its peripherals within a metal panel as shown in Fig. G.1-2.

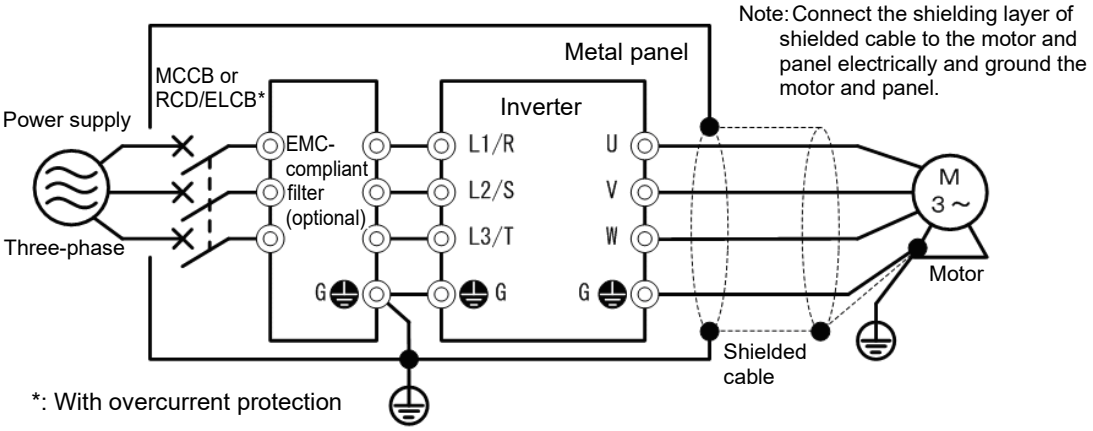

Fig. G.1-2 EMC-compliant filter (option) installation method

In case of EMC filter built-in type inverter

(1) Mount the inverter on a grounded panel or metal plate. Use shielded wires for the motor cable and route the cable as short as possible. Firmly clamp the shields to the metal plate to ground them. Further, connect the shielding layers electrically to the grounding terminal of the motor. Use a wiring guide, etc., and try as best as possible to keep input wires and output wires separate from one another.

(2) For connection to inverter's control terminals and for connection of the RS-485 communication signal cable, use shielded wires. As with the motor connections, clamp the shields firmly to a grounded panel.

(3) If noise from the inverter exceeds the permissible level, enclose the inverter and its peripherals within a metal panel as shown in Fig. G.1-3.

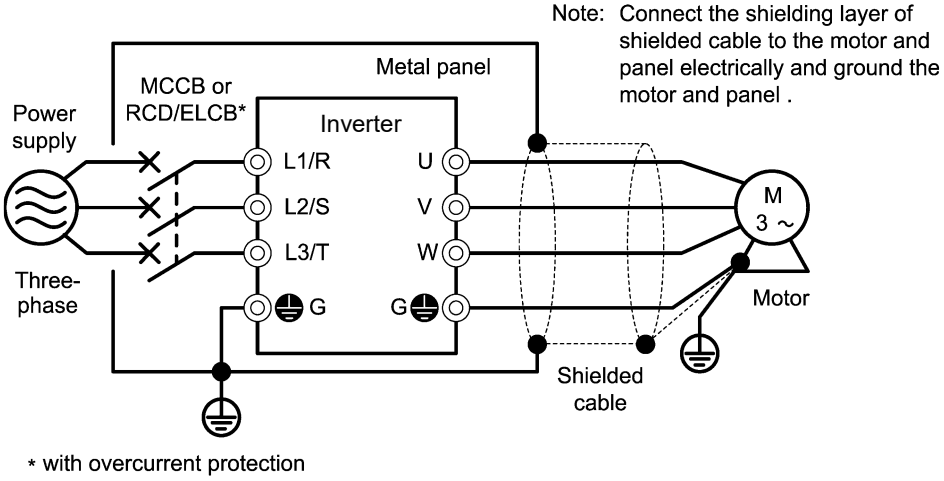

Fig. G.1-3 Installation method for built-in type EMC-compliant filter

■ Leakage current of EMC-filter built-in type of inverters

An EMC filter uses grounding capacitors for noise suppression which increase leakage current. The use of grounding capacitors leads to an increase in leakage current, and therefore a check should be carried out to ensure that the power supply system has not been affected.

⚠CAUTION⚠

As the touch current (leakage current) of inverters with EMC-filter is relatively high, it is of essential importance to always assure a reliable connection to Protective Earth (PE). (Current values are shown in Table G.1-3.)
In Table G.1-3, for the inverter types whose leakage currents are equal to or exceed the critical value of 3.5 mA AC or 10 mA DC (IEC 61800-5-1), the minimum cross sectional area of the PE-conductor should be:

- 10 mm^2 (Cu-conductors)
- 16 mm^2 (Al-conductors)

Failure to observe this could result in electric shock.

Table G.1-3 Leakage current of EMC filter built-in type of inverters

Power system	Inverter type	Leakage current (mA)
Three-phase 400 V *1)	FRN0002G2E-4G	3
	FRN0003G2E-4G	
	FRN0004G2E-4G	
	FRN0006G2E-4G	
	FRN0009G2E-4G	
	FRN0018G2E-4G	7
	FRN0023G2E-4G	
	FRN0035G2E-4G	
	FRN0041G2E-4G	5
	FRN0045G2E-4G	
	FRN0060G2E-4G	
	FRN0085G2E-4G	11
	FRN0105G2E-4G	
	FRN0139G2E-4G	
	FRN0179G2E-4G	5
	FRN0217G2E-4G	
	FRN0261G2E-4G	
	FRN0290G2E-4G	
	FRN0376G2E-4G	
	FRN0431G2E-4G	
	FRN0547G2E-4G	
	FRN0610G2E-4G	
	FRN0739G2E-4G	
	FRN0840G2E-4G	
	FRN1039G2E-4G	
	FRN1169G2E-4G	
	FRN1385G2E-4G	
	FRN1480G2E-4G	

*1) Calculated based on these measuring conditions: 480 V/60 Hz, neutral grounding, interphase voltage unbalance ratio of 2%.

[2] Compliance with European Low Voltage Directive

General-purpose inverters are subject to compliance with the European Low Voltage Directive. The CE marking on inverters represents a self-declaration that the product complies with the Low Voltage Directive.

■ Note

If using as a European Low Voltage Directive compatible product, compatibility with Low Voltage Directive 2014/35/EU is achieved by installing the product as follows.

Compliance with European standards

Adjustable speed electrical power drive systems.

Part 5-1: Safety requirements. Electrical, thermal and energy EN61800-5-1

Compliance with European Low Voltage Directive

⚠WARNING⚠

1. Always ground the grounding terminal ⏚G, and do not attempt to provide electric shock protection simply with an earth leakage circuit breaker* (RCD (Residual-current-operated protective) or ELCB (Earth Leakage Circuit Breaker).
   * With overcurrent protection function
2. This offers protection against the risk of high voltage or accidents that may result in inverter damage, and therefore a fuse of specification indicated in the following table must be installed at the power supply side.
   • Breaking capacity of 10 kA or higher, rated voltage of 500 V or lower

Power supply system	Standard applicable motor (kW)	Inverter type	Specification	Fuse rating (A)
Three-phase 200 V	0.4	FRN0003G2S-2G	HHD	50(IEC 60269-4)
	0.75	FRN0005G2S-2G		
	1.5	FRN0008G2S-2G		80(IEC 60269-4)
	2.2	FRN0011G2S-2G		125(IEC 60269-4)
	3.7	FRN0018G2S-2G		
	5.5	FRN0032G2S-2G	HHD	160 (IEC60269-4)
	7.5		HND	
		FRN0046G2S-2G	HHD	200(IEC 60269-4)
	11		HND	
		FRN0059G2S-2G	HHD	
	15		HND	
		FRN0075G2S-2G	HHD	250(IEC 60269-4)
	18.5		HND	
		FRN0088G2S-2G	HHD	
	22		HND	
		FRN0115G2S -2G	HHD	315(IEC 60269-4)
	30		HND	
		FRN0146G2S-2G	HHD	450(IEC 60269-4)
	37		HND	
		FRN0180G2S-2G	HHD	500(IEC 60269-4)
	45		HND	
		FRN0215G2S-2G	HHD	550(IEC 60269-4)
	55		HND	
		FRN0288G2S-2G	HHD	
	75		HND	
		FRN0346G2S-2G	HHD	
	90		HND	
		FRN0432G2S-2G	HHD	700(IEC 60269-4)
	110		HND	

(cont.)

Compliance with European Low Voltage Directive (cont.)

Note) The ☐ in the inverter type is replaced by a letter of the alphabet indicating the type.

Power supply system	Standard applicable motor (kW)	Inverter type	Specification	Fuse rating (A)
Three-phase 400 V	0.4	FRN0002G2☐-4G	HHD	50(IEC 60269-4)
	0.75	FRN0003G2☐-4G		
	1.5	FRN0004G2☐-4G		
	2.2	FRN0006G2☐-4G		63(IEC 60269-4)
	3.7	FRN0009G2☐-4G		
	5.5	FRN0018G2☐-4G	HHD	100(IEC 60269-4)
	7.5		HND	
		FRN0023G2☐-4G	HHD	
	11		HND	
		FRN0035G2☐-4G	HHD	125 (IEC60269-4)
	15		HND	
		FRN0041G2☐-4G	HHD	160(IEC 60269-4)
	18.5		HND	
		FRN0045G2☐-4G	HHD	
	22		HND	
		FRN0060G2☐-4G	HHD	200(IEC 60269-4)
	30		HND	
		FRN0085G2☐-4G	HHD	315(IEC 60269-4)
	37		HD/HND	
		FRN0105G2☐-4G	HHD	
	45	FRN0085G2☐-4G	ND	
		FRN0105G2☐-4G	HD/HND	
		FRN0139G2☐-4G	HHD	350(IEC 60269-4)
	55	FRN0105G2☐-4G	ND	315(IEC 60269-4)
		FRN0139G2☐-4G	HD/HND	350(IEC 60269-4)
		FRN0179G2☐-4G	HHD	400(IEC 60269-4)
	75	FRN0139G2☐-4G	ND	350(IEC 60269-4)
		FRN0179G2☐-4G	HD/HND	400(IEC 60269-4)
		FRN0217G2☐-4G	HHD	350(IEC 60269-4)
	90	FRN0179G2☐-4G	ND	400(IEC 60269-4)
		FRN0217G2☐-4G	HD	350(IEC 60269-4)
		FRN0261G2☐-4G	HHD	
	110	FRN0217G2☐-4G	HND/ND	
		FRN0261G2☐-4G	HD	
		FRN0290G2☐-4G	HHD	400(IEC 60269-4)
	132	FRN0261G2☐-4G	HND/ND	350(IEC 60269-4)
		FRN0290G2☐-4G	HD	450(IEC 60269-4)
		FRN0376G2☐-4G	HHD	500(IEC 60269-4)
	160	FRN0290G2☐-4G	HND/ND	450(IEC 60269-4)
		FRN0376G2☐-4G	HD	500(IEC 60269-4)
		FRN0431G2☐-4G	HHD	550(IEC 60269-4)
	200	FRN0376G2☐-4G	HND/ND	500(IEC 60269-4)
		FRN0431G2☐-4G	HD	630(IEC 60269-4)
		FRN0547G2☐-4G	HHD	700(IEC 60269-4)
	220	FRN0431G2☐-4G	HND/ND	630(IEC 60269-4)
		FRN0547G2☐-4G	HD	700(IEC 60269-4)
		FRN0610G2☐-4G	HHD	800(IEC 60269-4)
	250	FRN0610G2☐-4G	HD	800(IEC 60269-4)
	280	FRN0547G2☐-4G	HND/ND	700(IEC 60269-4)
		FRN0739G2☐-4G	HHD	1000(IEC 60269-4)
	315	FRN0610G2☐-4G	HND/ND	800(IEC 60269-4)
		FRN0739G2☐-4G	HD	1000(IEC 60269-4)
		FRN0840G2☐-4G	HHD	1100(IEC 60269-4)
	355	FRN0739G2☐-4G	HND	1000(IEC 60269-4)
		FRN0840G2☐-4G	HD	1100(IEC 60269-4)
		FRN1039G2☐-4G	HHD	1250(IEC 60269-4)
	400	FRN0739G2☐-4G	ND	1000(IEC 60269-4)
		FRN0840G2☐-4G	HND	1100(IEC 60269-4)
		FRN1039G2☐-4G	HD	1250(IEC 60269-4)
		FRN1169G2☐-4G	HHD	1500(IEC 60269-4)
	450	FRN0840G2☐-4G	ND	1100(IEC 60269-4)
		FRN1169G2☐-4G	HD	1500(IEC 60269-4)
	500	FRN1039G2☐-4G	HND	1250(IEC 60269-4)
		FRN1385G2☐-4G	HHD	2000(IEC60269-4)
	560	FRN1039G2☐-4G	ND	1400(IEC 60269-4)
		FRN1169G2☐-4G	HND	1500(IEC 60269-4)
		FRN1385G2☐-4G	HD	2000(IEC60269-4)

	630	FRN1169G2□-4G	ND	1600(IEC 60269-4)
		FRN1385G2□-4G	HND	2000(IEC60269-4)
		FRN1480G2□-4G	HHD	2000(IEC60269-4)
	710	FRN1385G2□-4G	ND	2000(IEC60269-4)
		FRN1480G2□-4G	HD/HND	
	800		ND	

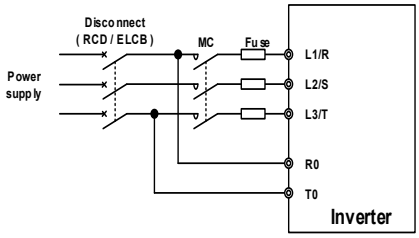

(cont.)

Compliance with European Low Voltage Directive (cont.)

⚠ WARNING ⚠

3. When used with the inverter, a molded case circuit breaker (MCCB), residual-current-operated protective device (RCD)/earth leakage circuit breaker (ELCB) or magnetic contactor (MC) should conform to the EN or IEC standards.

4. When you use a residual-current-operated protective device (RCD)/earth leakage circuit breaker (ELCB) for protection from electric shock in direct or indirect contact power lines or nodes, be sure to install type B of RCD/ELCB on the input (primary) of the inverter.

Power supply voltage	Nominal applied motor (kW)	Inverter type	HHD / HND	MCCB *1		RCD / ELCB *1			
				Rated current		Rated current		Sensitivity current *2	Maximum Fault Loop Impedance
				w/ DCR	w/o DCR	w/ DCR	w/o DCR		
Three-phase 200V	0.4	FRN0003G2S-2G	HHD	5	5	5	5	30mA	200Ω
	0.75	FRN0005G2S-2G	HHD		10		10	30mA	200Ω
	1.5	FRN0008G2S-2G	HHD	10	15	10	15	30mA	200Ω
	2.2	FRN0011G2S-2G	HHD		20		20	30mA	200Ω
	3.7	FRN0018G2S-2G	HHD	20	30	20	30	30mA	200Ω
	5.5	FRN0032G2S-2G	HHD	30	50	30	50	30mA	200Ω
	7.5		HND	40	75	40	75		
		FRN0046G2S-2G	HHD					30mA	200Ω
	11		HND	50	100	50	100		
		FRN0059G2S-2G	HHD					30mA	200Ω
	15		HND	75	125	75	125		
		FRN0075G2S-2G	HHD					30mA	200Ω
	18.5		HND	100	150	100	150		
		FRN0088G2S-2G	HHD					30mA	200Ω
	22		HND		175		175		
		FRN0115G2S-2G	HHD					30mA	200Ω
	30		HND	150	200	150	200		
		FRN0146G2S-2G	HHD					100mA	200Ω
	37		HND	175	250	175	250		
		FRN0180G2S-2G	HHD					100mA	200Ω
	45		HND	200	300	200	300		
		FRN0215G2S-2G	HHD					100mA	200Ω
	55		HND	250	350	250	350		
		FRN0288G2S-2G	HHD					100mA	200Ω
	75		HND	350	–	350	–		
		FRN0346G2S-2G	HHD					100mA	200Ω
	90		HND	400		400			
		FRN0432G2S-2G	HHD					100mA	200Ω
	110		HND	500		500			

Note:

*1 The frame size and model of the MCCB or RCD/ELCB (with overcurrent protection) will vary, depending on the power transformer capacity. Refer to the related technical documentation for details.

*2 Sensitivity current settings in the TT-system vary each country, so follow the instructions of the authorities.

(cont.)

Compliance with European Low Voltage Directive (cont.)

⚠WARNING⚠

Power supply voltage	Nominal applied motor (kW)	Inverter type	HHD/ HND/HD/ ND	MCCB*1 Rated current w/ DCR	MCCB*1 Rated current w/o DCR	RCD / ELCB*1 Rated current w/ DCR	RCD / ELCB*1 Rated current w/o DCR	Sensitivity current *2	Maximum Fault Loop Impedance
Three-phase 400V	0.4	FRN0002G2□-4G	HHD	5	5	5	5	30mA	20Ω
	0.75	FRN0003G2□-4G	HHD						
	1.5	FRN0004G2□-4G	HHD		10		10		
	2.2	FRN0006G2□-4G	HHD	10	15	10	15		
	3.7	FRN0009G2□-4G	HHD		20		20		
	5.5	FRN0018G2□-4G	HHD	15	30	15	30		
	7.5		HND	20	40	20	40		
		FRN0023G2□-4G	HHD					100mA	
	11		HND	30	50	30	50		
		FRN0035G2□-4G	HHD						
	15		HND	40	60	40	60		
		FRN0041G2□-4G	HHD						
	18.5		HND		75		75		
		FRN0045G2□-4G	HHD						
	22		HND	50	100	50	100		
		FRN0060G2□-4G	HHD						
	30		HND	75	125	75	125		
		FRN0085G2□-4G	HHD						
	37		HD/HND	100		100			
		FRN0105G2□-4G	HHD						
	45	FRN0085 G2□-4G	ND		150		150		
		FRN0105G2□-4G	HD/HND						
		FRN0139G2□-4G	HHD						
	55	FRN0105G2□-4G	ND	125	200	125	200		
		FRN0139G2□-4G	HD/HND						
		FRN0179G2□-4G	HHD						
	75	FRN0139G2□-4G	ND	175		175	–		
		FRN0179G2□-4G	HD/HND						
		FRN0217G2□-4G	HHD						
	90	FRN0179G2□-4G	ND	200		200			
		FRN0217G2□-4G	HD						
		FRN0261G2□-4G	HHD						
	110	FRN0217G2□-4G	HND/ ND	250		250		200mA	
		FRN0261G2□-4G	HD						
		FRN0290G2□-4G	HHD						
	132	FRN0261G2□-4G	HND/ ND	300		300			
		FRN0290G2□-4G	HD						
		FRN0376G2□-4G	HHD						
	160	FRN0290G2□-4G	HND/ ND	350		350			
		FRN0376G2□-4G	HD						
		FRN0431G2□-4G	HHD						
	200	FRN0376G2□-4G	HND/ ND	500		500			
		FRN0431G2□-4G	HD						
		FRN0547G2□-4G	HHD						
	220	FRN0431G2□-4G	HND/ ND						
		FRN0547G2□-4G	HD						
		FRN0610G2□-4G	HHD						
	250	FRN0610G2□-4G	HD	600		600		500mA	
	280	FRN0547G2□-4G	HND/ ND						
		FRN0739G2□-4G	HHD						
	315	FRN0610G2□-4G	HND/ ND	800		800			
		FRN0739G2□-4G	HD						
		FRN0840G2□-4G	HHD						
	355	FRN0739G2□-4G	HND						
		FRN0840G2□-4G	HD						
		FRN1039G2□-4G	HHD						
	400	FRN0739G2□-4G	ND	1200		1200			
		FRN0840G2□-4G	HND						
		FRN1039G2□-4G	HD						
		FRN1169G2□-4G	HHD						

	450	FRN0840G2□-4G	ND	1200		1200			
		FRN1169G2□-4G	HD					500mA	20Ω
	500	FRN1039G2□-4G	HND						
		FRN1385G2□-4G	HHD						
	560	FRN1039G2□-4G	ND						
		FRN1169G2□-4G	HND						
		FRN1385G2□-4G	HD						
	630	FRN1169G2□-4G	ND	1400		1400			
		FRN1385G2□-4G	HND						
		FRN1480G2□-4G	HHD						
	710	FRN1385G2□-4G	ND	1600		1600			
		FRN1480G2□-4G	HD/HND						
	800	FRN1480G2□-4G	ND	2000		2000			

Note: A box (□) in the above table replaces S (Basic type) or E (EMC filter built-in type) depending on the enclosure.

*1 The frame size and model of the MCCB or RCD/ELCB (with overcurrent protection) will vary, depending on the power transformer capacity. Refer to the related technical documentation for details.

*2 Sensitivity current settings in the TT-system vary each country, so follow the instructions of the authorities.

Compliance with European Low Voltage Directive (cont.)

⚠WARNING⚠

5. The inverter should be used in an environment that does not exceed Pollution Degree 2 requirements. If the environment has a Pollution Degree 3 or 4, install the inverter in an enclosure of IP54 or higher.
6. Install the inverter, AC or DC reactor, input or output filter in an enclosure with minimum degree of protection of IP2X (Top surface of enclosure shall be minimum IP4X when it can be easily accessed), to prevent human body from touching directly to live parts of these equipment.
7. Do not connect any copper wire directly to grounding terminals. Use crimp terminals with tin or equivalent plating to connect them.
8. When you use an inverter at an altitude of more than 2000 m, you should apply basic insulation for the control circuits of the inverter. The inverter cannot be used at altitudes of more than 3000 m.
9. Use the wires indicated in IEC60364-5-52.

Power supply voltage	Nominal applied motors	Inverter type	HHD / HND mode	Recommended wire size (mm^2)								
				Main terminal *2							Control circuit terminal	Aux.control power supply R0,T0
				Main power supply input [L1/R, L2/S, L3/T]		Grounding for inverter [⏚] *3		Inverter output [U, V, W]	DC reactor [P1, P(+)]	Braking resistor [P(+), DB]		
				With DC reactor	Without DC reactor	With DC reactor	Without DC reactor					
Three-phase 200 V	0.4	FRN0003G2S-2G	HHD	2.5	2.5	2.5	2.5	2.5	2.5	2.5	0.75	-
	0.75	FRN0005G2S-2G										2.5
	1.5	FRN0008G2S-2G										
	2.2	FRN0011G2S-2G										
	3.7	FRN0018G2S-2G			4		4					
	5.5	FRN0032G2S-2G	HHD	4	6	4	6	4	4			
	7.5		HND	6	10	6	10	6	6			
		FRN0046G2S-2G	HHD					10				
	11		HND	10	16	10	16		16			
		FRN0059G2S-2G	HHD									
	15		HND	16	25	16	16	16	25			
		FRN0075G2S-2G	HHD									
	18.5		HND	25	35	16	16	25	35			
		FRN0088G2S-2G	HHD									
	22		HND	35	50	16	25	35				
		FRN0115G2S -2G	HHD									
	30		HND	50	70	25	35	50	70			
		FRN0146G2S-2G	HHD									
	37		HND	70	95	35	50	70	95			
		FRN0180G2S-2G	HHD									
	45		HND	70	50 x 2	35	50	95	35×2	4		
		FRN0215G2S-2G	HHD									
	55		HND	35×2	70 x 2	35	70	35×2	50×2	6		
		FRN0288G2S-2G	HHD									
	75		HND	70×2	-	70	-	70×2	95 x 2	10		
		FRN0346G2S-2G	HHD									
	90		HND	70×2		70		95×2	120 x 2	-		
		FRN0432G2S-2G	HHD									
	110		HND	120×2		120		120×2	150 x 2			

Note:

*1 The frame size and type of a MCCB or RCD/ELCB (with overcurrent protection) vary with the capacity of the power supply transformer. Refer to the related technical documents for detailed selection.

*2 The recommended wire sizes for the main circuit terminals are examples of using a PVC wire (for 70ºC, 600 V) at a surrounding temperature of 40ºC.

*3 Only one piece of wire with a recommended size can be connected to a ground terminal.

(cont.)

Compliance with European Low Voltage Directive (cont.)

⚠WARNING⚠

Power supply voltage	Nominal applied motors	Inverter type	HHD/HND/HD/ND mode	Recommended wire size (mm²)								
				Main terminal *2							Control circuit terminal	Aux.control power supply R0,T0
				Main power supply input [L1/R, L2/S, L3/T]		Grounding for inverter [⏚] *3		Inverter output [U, V, W]	DC reactor [P1, P(+)]	Braking resistor [P(+), DB]		
				With DC reactor	Without DC reactor	With DC reactor	Without DC reactor					
Three-phase 400 V	0.4	FRN0002G2□-4G	HHD	2.5	2.5	2.5	2.5	2.5	2.5	2.5	0.75	-
	0.75	FRN0003G2□-4G										2.5
	1.5	FRN0004G2□-4G										
	2.2	FRN0006G2□-4G										
	3.7	FRN0009G2□-4G										
	5.5	FRN0018G2□-4G	HHD									
	7.5		HND		4		4					
		FRN0023G2□-4G	HHD									
	11		HND	4	6	4	6	4	4			
		FRN0035G2□-4G	HHD									
	15		HND	6	10	6	10	6	6			
		FRN0041G2□-4G	HHD									
	18.5		HND		16		16	10	10			
		FRN0045G2□-4G	HHD									
	22		HND	10		10			16			
		FRN0060G2□-4G	HHD									
	30		HND	16	25	16	16	16	25			
		FRN0085G2□-4G	HHD									
	37		HD/HND	25	35	16	16	25				
		FRN0105G2□-4G	HHD									
	45	FRN0085G2□-4G	ND		50		25	35	35			
		FRN0105G2□-4G	HD/HND									
		FRN0139G2□-4G	HHD									
	55	FRN0105G2□-4G	ND	35	70	16	35	50	50			
		FRN0139G2□-4G	HD/HND									
		FRN0179G2□-4G	HHD									
	75	FRN0139G2□-4G	ND	70	-	35	-	70	95			
		FRN0179G2□-4G	HD/HND									
		FRN0217G2□-4G	HHD							4		
	90	FRN0179G2□-4G	ND	70		35		95		2.5		
		FRN0217G2□-4G	HD							4		
		FRN0261G2□-4G	HHD							-		
	110	FRN0217G2□-4G	HND/ND	95		50		35×2	50×2	4		
		FRN0261G2□-4G	HD							-		
		FRN0290G2□-4G	HHD									
	132	FRN0261G2□-4G	HND/ND	50×2		50		50×2	70×2			
		FRN0290G2□-4G	HD									
		FRN0376G2□-4G	HHD						185			
	160	FRN0290G2□-4G	HND/ND	70x2		70		70x2	95x2			
		FRN0376G2□-4G	HD	185		95		240	300			
		FRN0431G2□-4G	HHD									
	200	FRN0376G2□-4G	HND/ND	300		150		300	120 x 2			
		FRN0431G2□-4G	HD									
		FRN0547G2□-4G	HHD									
	220	FRN0431G2□-4G	HND/ND					120×2	150 x 2			
		FRN0547G2□-4G	HD									
		FRN0610G2□-4G	HHD									
	250	FRN0610G2□-4G	HD	120×2		150		150×2	185×2			

Note: A box (□) in the above table replaces S (Basic type) or E (EMC filter built-in type) depending on the enclosure.

*1 The frame size and type of a MCCB or RCD/ELCB (with overcurrent protection) vary with the capacity of the power supply transformer. Refer to the related technical documents for detailed selection.

*2 The recommended wire sizes for the main circuit terminals are examples of using a PVC wire (for 70ºC, 600 V) at a surrounding temperature of 40ºC.

*3 Only one piece of wire with a recommended size can be connected to a ground terminal.

(cont.)

Compliance with European Low Voltage Directive (cont.)

⚠WARNING⚠

Power supply voltage	Nominal applied motors	Inverter type	HHD/HND/HD/ND mode	Recommended wire size (mm²) Main terminal *2: Main circuit power inputs [L1/R, L2/S, L3/T] With DC reactor	Main circuit power inputs [L1/R, L2/S, L3/T] Without DC reactor	Grounding for inverter[⏚]*3 With DC reactor	Grounding for inverter[⏚]*3 Without DC reactor	Inverter outputs [U,V,W]	DC reactor connection [P1,P(+)]	Braking resistor [P(+),DB]	Control circuit terminal	Aux.control power supply R0,T0
Three-phase 400V	280	FRN0547G2□-4G	HND/ND	150×2	–	150	–	185×2	240×2	–	0.75	2.5
		FRN0739G2□-4G	HHD					150×2				
	315	FRN0610G2□-4G	HND/ND	185×2		185		240×2	240×2			
		FRN0739G2□-4G	HD					185×2				
		FRN0840G2□-4G	HHD									
	355	FRN0739G2□-4G	HND	240×2		240		240×2	300×2			
		FRN0840G2□-4G	HD									
		FRN1039G2□-4G	HHD									
	400	FRN0739G2□-4G	ND	300×2		300		300×2	240×3			
		FRN0840G2□-4G	HND									
		FRN1039G2□-4G	HD									
		FRN1169G2□-4G	HHD									
	450	FRN0840G2□-4G	ND	300×2		300		240×3	300×3			
		FRN1169G2□-4G	HD									
	500	FRN1039G2□-4G	HND	240×3		185x2		300×3	240×4			
		FRN1385G2□-4G	HHD									
	560	FRN1039G2□-4G	ND	300×3		240x2		240×4	300×4			
		FRN1169G2□-4G	HND									
		FRN1385G2□-4G	HD									
	630	FRN1169G2□-4G	ND	300×4		300x2		300×4	300×3 *4			
		FRN1385G2□-4G	HND						300×5 (300×3) *4			
		FRN1480G2□-4G	HHD									
	710	FRN1385G2□-4G	ND					300×5 (300×3) *4	300×6 (300×4) *4			
		FRN1480G2□-4G	HD/HND									
	800		ND	240x4 *4		240x2 *4		300×6 (240×4) *4	300×4 *4			

Note: A box (□) in the above table replaces S (Basic type) or E (EMC filter built-in type) depending on the enclosure.

*1 The frame size and type of a MCCB or RCD/ELCB (with overcurrent protection) vary with the capacity of the power supply transformer. Refer to the related technical documents for detailed selection.

*2 The recommended wire sizes for the main circuit terminals are examples of using a PVC wire (for 70ºC, 600 V) at a surrounding temperature of 40ºC.

*3 Only one piece of wire with a recommended size can be connected to a ground terminal.

*4 In case of using a XLPE wire (for 90ºC, 600 V) at a surrounding temperature of 40ºC.

10. An IEC61800-5-1 5.2.3.6.3 Short-circuit Current Test has been carried out on this inverter under the following conditions.

Current when shorted: 10,000 A

240 V or less (200V series, FRN0003 to 0115G2S-2G)

230 V or less (200V series, FRN0146 to 0432G2S-2G)

480 V or less (400V series, FRN****G2□-4G)

11. Use this inverter at the following power supply system.

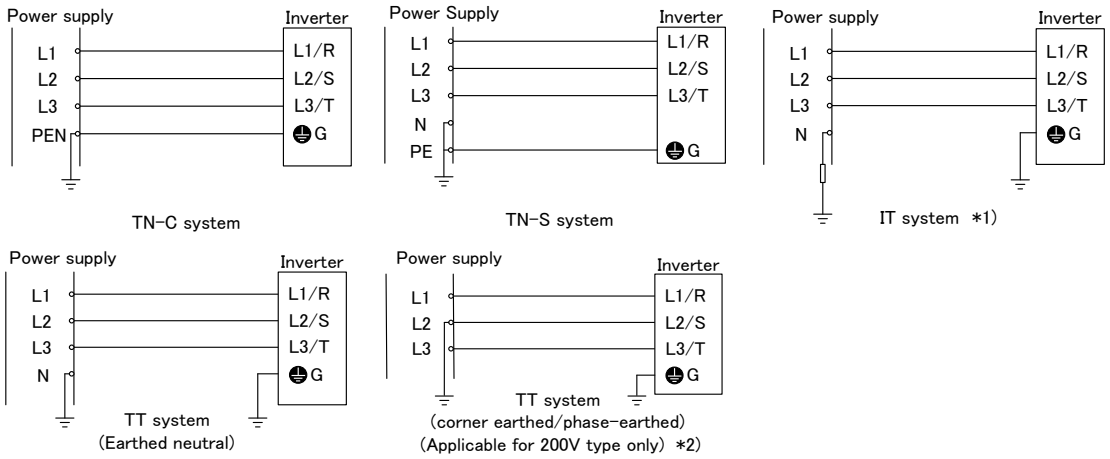

*1 Use this inverter at the following IT system.

Non-earthed (isolated from earth) IT system	Can be used. In this case the insulation between the control interface and the main circuit of the inverter is basic insulation. Thus do not connect SELV circuit from external controller directly (make connection using a supplementary insulation). Use an earth fault detector able to disconnect the power within 5s after the earth fault occurs.
IT system which earthed neutral by an impedance	
Corner earthed / Phase-earthed IT system by an impedance	Cannot be used.

*2 Cannot apply to Corner earthed / Phase-earthed TT system of 400V type

12. Solid state motor overload protection (motor protection by electronic thermal overload relay) is provided in each model. Use function codes F10 to F12 to set the protection level.

(Finished)

■ Compatibility with Revised EMC and Low Voltage Directive

In the revised EMC Directive (2014/30/EU) and Low Voltage Directive (2014/35/EU), it is necessary to clearly state the name and the address of manufacturers and importers to enhance traceability. Importers shall be indicated as follows when exporting products from Fuji Electric to Europe.

(Manufacturer)
Fuji Electric Co., Ltd.
5520, Minami Tamagaki-cho, Suzuka-city, Mie 513-8633, Japan

(Importer in Europe)
Fuji Electric Europe GmbH
Goethering 58, 63067 Offenbach / Main, Germany

<Precaution when exporting to Europe>

- Not all Fuji Electric products in Europe are necessarily imported by the above importer. If any Fuji Electric products are exported to Europe via another importer, please ensure that the importer is clearly stated by the customer.

G.2 Harmonic Component Regulations in EU

[1] General comments

When you use general-purpose industrial inverters in the EU, the harmonics emitted from the inverter to power lines are strictly regulated as stated below.

If an inverter whose rated input is 1 kW or less is connected to public low-voltage power supply, it is regulated by the harmonics emission regulations from inverters to power lines (with the exception of industrial low-voltage power lines). (Refer to Fig. G.2-1.)

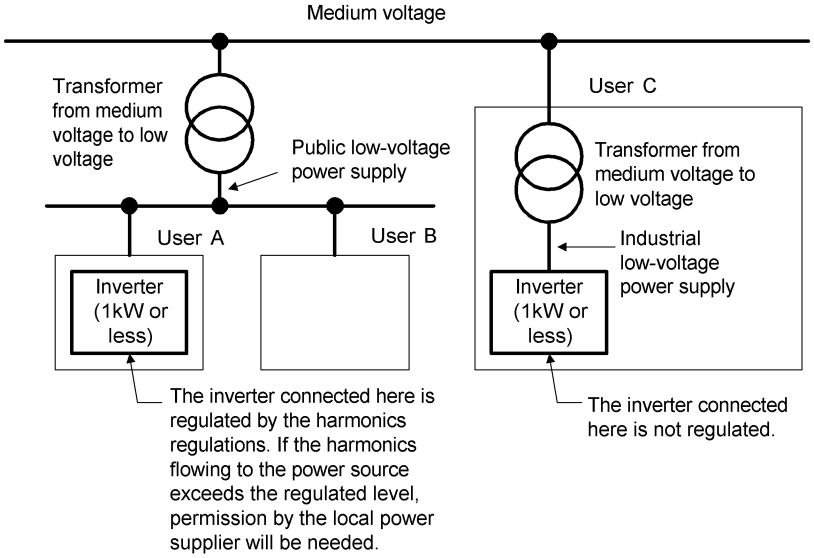

Fig. G.2-1 Power supply system

[2] Compliance with the harmonic component regulation

Table G.2-1 Compliance with harmonic component regulations

Power supply voltage	Inverter type *1	w/o DCR	w/ DCR	Applicable DC reactor type
Three-phase 200 V	FRN0003G2S-2G	Y *2	Y *2	DCR2-0.4
	FRN0005G2S-2G	Y *2	Y *2	DCR2-0.75
Three-phase 400 V	FRN0002G2□-4G	N	Y	DCR4-0.4
	FRN0003G2□-4G	N	Y	DCR4-0.75

Y: Meets EN61000-3-2 (+A14) standard, and therefore the product may be connected to a commercial voltage power supply.

N: Does not meet EN61000-3-2 (+A14) standard. If connecting the product to a commercial low voltage power supply, it will be necessary to obtain the permission of the local power company. When harmonic current data is necessary, consult your Fuji Electric representative.

*1: The □ in the inverter type is replaced by a letter of the alphabet indicating the type.

*2: Evaluated by the level of harmonics flow to the 400 VAC line when three-phase 200 VAC power is supplied from the three-phase 400 VAC power via a step-down transformer.

G.3 Compliance with UL Standards and Canadian Standards (cUL certification)

[1] General comments

UL Standards (Underwriters Laboratories Inc. standards) are North American safety standards used to prevent fire and other such accidents, and offer protection to users, service technicians, and the general public.

cUL indicates that products which comply with CSA standards are certified by UL. cUL certified products are as effective as those certified as complying with CSA standards.

[2] UL Standards and Canadian Standards (cUL Certification) Compatibility

Compatibility with UL Standards and Canadian Standards (cUL certification) is ensured by installing inverters with UL/cUL marking in accordance with the following. (Products with no standards indicated do not comply with European Standards.)

⚠WARNING⚠

High available fault current – damage warning:
The opening of the branch-circuit protective device may be an indication that a fault current has been interrupted. To reduce the risk of fire or electric shock, current-carrying parts and other components of the controller should be examined and replaced if damaged. If burnout of the current element of an overload relay occurs, the complete overload relay must be replaced.

⚠CAUTION

1. Solid state motor overload protection (motor protection by electronic thermal overload relay) is provided in each model.
   Use function codes F10 to F12 to set the protection level. Refer to the description below.

2. Use Cu wire only.

3. Use Class 1 wire only for control circuits.

4. Short circuit current rating
   200 volts class models are suitable for use on a circuit of delivering not more than 100,000 rms symmetrical amperes, 240 volts maximum when protected by appropriate protection device (refer to the below tables of 8.) having the short circuit current rating (SCCR) not less than 100,000 rms symmetrical amperes, 240 volts maximum.
   400 volts class models are suitable for use on a circuit of delivering not more than 100,000 rms symmetrical amperes, 480 volts maximum when protected by appropriate protection device (refer to the below tables of 8.) having the short circuit current rating (SCCR) not less than 100,000 rms symmetrical amperes, 480 volts maximum.
   If the branch circuit devices with less than the short circuit current rating 100,000 A is used, the short circuit current rating will be limited to the short circuit current rating of the protection device.
   Integral solid state short circuit protection does not provide branch circuit protection. Branch circuit protection must be provided in accordance with the National Electrical Code and any additional local codes.

5. Field wiring connections must be made by a UL Listed and CSA Certified closed-loop terminal connector sized for the wire gauge involved. Connector must be fixed using the crimp tool specified by the connector manufacturer.
   When wiring terminals, refer to the recommended wire sizes, and use UL/CSA certified round crimp terminals. Crimp terminals should be crimped using the crimping tool recommended by the manufacturer.

(cont.)

UL Standards and Canadian Standards (cUL Certification) Compatibility (cont.)

⚠CAUTION

6.All circuits with terminals L1/R, L2/S, L3/T, R0, T0 must have a common disconnect and be connected to the same pole of the disconnect if the terminals are connected to the power supply.

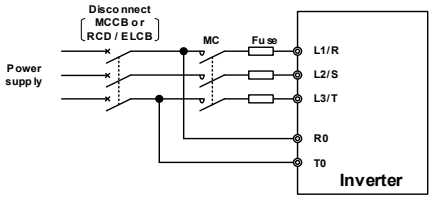

7.Environmental requirements

・ Surrounding/ambient temperature

Maximum surrounding air temperature 50 °C

・ Atmosphere

For use in pollution degree 2 environments. (for Open-Type models)

(cont.)

UL Standards and Canadian Standards (cUL Certification) Compatibility (cont.)

⚠CAUTION

8. Install UL certified protection devices between the power supply and the inverter, referring to the table below.

Power supply	Inverter type	HHD/HND mode	Short circuit current rating (SCCR) 100kA			
			Semiconductor fuse Cat No.		Class CC,J,T,L fuse	Inverse time circuit breaker
			Manufacturer: Mersen	Manufacturer: Bussmann (Eaton)	Maximum Current (A)	Maximum Current (A)
Three-phase 200V	FRN0003G2S-2G	HHD	PC30UD69V50■	170M3458	10	15
	FRN0005G2S-2G		PC30UD69V50■	170M3460	15	15
	FRN0008G2S-2G		PC30UD69V80■	170M3462	20	15
	FRN0011G2S-2G		PC30UD69V125■	170M3462	30	20
	FRN0018G2S-2G		PC30UD69V125■	170M3463	40	40
	FRN0032G2S-2G	HHD	PC30UD69V160■	170M3464	60	50
		HND			80	80
	FRN0046G2S-2G	HHD	PC30UD69V200■	170M3465	80	80
		HND			100	100
	FRN0059G2S-2G	HHD	PC30UD69V200■	170M3465	100	100
		HND			150	125
	FRN0075G2S-2G	HHD	PC30UD69V250■	170M3466	150	125
		HND			175	150
	FRN0088G2S-2G	HHD	PC30UD69V250■	170M3466	175	150
		HND			200	175
	FRN0115G2S-2G	HHD	PC30UD69V315■	170M3467	200	175
		HND			250	250
	FRN0146G2S-2G	HHD	PC30UD69V450■	170M3469	250	250
		HND			350	300
	FRN0180G2S-2G	HHD	PC30UD69V500■	170M3470	350	300
		HND			400	400
	FRN0215G2S-2G	HHD	PC30UD69V550■	170M3472	400	400
		HND			450	500
	FRN0288G2S-2G	HHD	PC30UD69V550■	170M3473	450	500
		HND			500	500
	FRN0346G2S-2G	HHD	PC30UD69V550■	170M3473	500	500
		HND			600	600
	FRN0432G2S-2G	HHD	PC31UD69V700■	170M4467	600	600
		HND			700	800

Note: ■ is replaced by a letter of the alphabet indicating the fuse type.

*1 The fuses listed are representative parts. Refer to additional material "INR-SI47-2587□-JEC" for the alternative parts.

(cont.)

UL Standards and Canadian Standards (cUL Certification) Compatibility (cont.)

⚠CAUTION

Power supply voltage	Inverter type	HHD/HND/HD/ND mode	Short circuit current rating (SCCR) 100kA			
			Semiconductor fuse Cat. No.		Class CC,J,T,L fuse	Inverse time circuit breaker
			Manufacturer: Mersen	Manufacturer: Bussmann (Eaton)	Maximum Current (A)	Maximum Current (A)
Three-phase 400 V	FRN0002G2□-4G	HHD	PC30UD69V50■	170M3458	3	15
	FRN0003G2□-4G	HHD	PC30UD69V50■	170M3458	6	15
	FRN0004G2□-4G	HHD	PC30UD69V50■	170M3459	10	15
	FRN0006G2□-4G	HHD	PC30UD69V63■	170M3460	15	15
	FRN0009G2□-4G	HHD	PC30UD69V63■	170M3461	20	20
	FRN0018G2□-4G	HHD	PC30UD69V100■	170M3462	30	30
		HND			40	40
	FRN0023G2□-4G	HHD	PC30UD69V100■	170M3462	40	40
		HND			60	50
	FRN0035G2□-4G	HHD	PC30UD69V125■	170M3463	60	50
		HND			70	70
	FRN0041G2□-4G	HHD	PC30UD69V160■	170M34664	70	70
		HND			90	80
	FRN0045G2□-4G	HHD	PC30UD69V160■	170M3464	90	80
		HND			100	100
	FRN0060G2□-4G	HHD	PC30UD69V200■	170M3465	100	100
		HND			125	125
	FRN0085G2□-4G	HHD	PC30UD69V315■	170M3467	125	125
		HD/HND			175	150
		ND			200	175
	FRN0105G2□-4G	HHD	PC30UD69V315■	170M3468	175	150
		HD/HND			200	175
		ND			250	225
	FRN0139G2□-4G	HHD	PC30UD69V350■	170M3469	200	175
		HD/HND			250	225
		ND			250	225
	FRN0179G2□-4G	HHD	PC30UD69V400■	170M3469	250	225
		HD/HND			250	225
		ND			300	250
	FRN0217G2□-4G	HHD	PC30UD69V350■	170M3469	250	225
		HD			300	250
		HND/ND			350	400
	FRN0261G2□-4G	HHD	PC30UD69V350■	170M3469	300	250
		HD			350	400
		HND/ND			400	400
	FRN0290G2□-4G	HHD	PC30UD69V400■	170M3470	350	400
		HD			400	400
		HND/ND	PC30UD69V450■		500	500
	FRN0376G2□-4G	HHD	PC30UD69V500■	170M3472	400	400
		HD			500	500
		HND			600	600
		ND			600	600
	FRN0431G2□-4G	HHD	PC30UD69V550■	170M3473	500	500
		HD	PC30UD69V630■		600	600
		HND/ND			700	600

(□:S,E)

Note: ■ is replaced by a letter of the alphabet indicating the fuse type.

*1 The fuses listed are representative parts. Refer to additional material "INR-SI47-2587□-JEC" for the alternative parts.

(cont.)

UL Standards and Canadian Standards (cUL Certification) Compatibility (cont.)

⚠CAUTION

Power supply voltage	Inverter type	HHD/HND/HD/ND mode	Short circuit current rating (SCCR) 100kA			
			Semiconductor fuse Cat. No.		Class CC,J,T,L fuse	Inverse time circuit breaker
			Manufacturer: Mersen	Manufacturer: Bussmann (Eaton)	Maximum Current (A)	Maximum Current (A)
Three-phase 400 V	FRN0547G2□-4G	HHD	PC31UD69V700■	170M4467	600	600
		HD			700	600
		HND/ND			1000	800
	FRN0610G2□-4G	HHD	PC31UD69V800■	170M4468	700	600
		HD			800	800
		HND/ND			1000	1000
	FRN0739G2□-4G	HHD	PC32UD69V1000■	170M5466	1000	800
		HD			1000	900
		HND			1200	1000
		ND			1200	1200
	FRN0840G2□-4G	HHD	PC32UD60V1100■	170M5467	1000	1000
		HD			1200	1000
		HND			1200	1200
		ND			1600	1200
	FRN1039G2□-4G	HHD	PC33UD69V1250■	170M5468	1200	1000
		HD			1200	1200
		HND		-	1600	1600
		ND	PC33UD69V1400■	-	1800	1600
	FRN1169G2□-4G	HHD	PC33UD60V1500■	170M5468	1200	1200
		HD			1400	1200
		HND		-	1800	1600
		ND	PC33UD60V1600■	-	2000	2000
	FRN1385G2□-4G	HHD	PC33UD55V2000■	170M6469	1600	1600
		HD			1800	1600
		HND		-	2000	2000
		ND		-	2200	2000
	FRN1480G2□-4G	HHD	PC33UD55V2000■	–	2000	2000
		HD/HND		–	2200	2000
		ND		–	2500	2500

(□:S,E)

Note: ■ is replaced by a letter of the alphabet indicating the fuse type.

*1 The fuses listed are representative parts. Refer to additional material "INR-SI47-2587□-JEC" for the alternative parts.

(cont.)

UL Standards and Canadian Standards (cUL Certification) Compatibility (cont.)

⚠CAUTION

9. Refer to the table below for field wiring.

Power supply voltage	Nominal applied motor	Inverter type	HHD/HND mode	Required torque lb-in (N・m)		Wire size AWG (mm^2)						
						Main terminal Cu Wire						
						L1/R, L2/S, L3/T			U, V, W			
				Main terminal	Aux. control power supply	60°C wire	75 °C wire	Remarks	60°C wire	75 °C wire	Remarks	Aux. control power supply
Three-phase 200V	0.4	FRN0003G2S-2G	HHD	10.6 (1.2)	–	14 (2.1)	14 (2.1)	*1 *3	14 (2.1)	14 (2.1)	*1 *3	–
	0.75	FRN0005G2S-2G										
	1.5	FRN0008G2S-2G		15.9 (1.8)	10.6 (1.2)							14 (2.1) *1 *2
	2.2	FRN0011G2S-2G										
	3.7	FRN0018G2S-2G				10 (5.3)	10 (5.3)		12 (3.3)	12 (3.3)		
	5.5	FRN0032G2S-2G	HHD	30.9 (3.5)		–	8 (8.4)	*1 *2 *3	–	8 (8.4)	*1 *2 *3	
			HND									
	7.5	FRN0046G2S-2G	HHD									
			HND				6 (13.3)	*2 *3				
	11	FRN0059G2S-2G	HHD									
			HND									
	15	FRN0075G2S-2G	HHD	51.3 (5.8)		3 (26.7)	4 (21.2)	*3	4 (21.2)	6 (13.3)	*2 *3	
			HND			1 (42.4)	3 (26.7)		3 (26.7)	4 (21.2)	*3	
	18.5	FRN0088G2S-2G	HHD			–	2 (33.6)	*2 *3	2 (33.6)	3 (26.7)		
			HND									
	22	FRN0115G2S-2G	HHD									
			HND				2/0 (67.4)		–	2 (33.6)	*2 *3	
	30	FRN0146G2S-2G	HHD	119.4 (13.5)						1 (42.4)		
			HND				3/0 (85)			1/0 (53.5)		
	37	FRN0180G2S-2G	HHD	238.9 (27)			4/0 (107.2)			3/0 (85)		
			HND									
	45	FRN0215G2S-2G	HHD									
			HND				2/0×2 (67.4×2)			4/0 (107.2)		
	55	FRN0288G2S-2G	HHD									
			HND				3/0×2 (85×2)			3/0×2 (85×2)		
	75	FRN0346G2S-2G	HHD	424.7 (48)								
			HND				4/0×2 (107.2×2)			4/0×2 (107.2×2)		
	90	FRN0432G2S-2G	HHD									
	110		HND				300×2 (152×2)			300×2 (152×2)		

Note 1) Control circuit terminal tightening torque: 6.1 lb-in (0.7 N·m), recommended wire size: AWG18 (0.8 mm^2)

*1 No terminal end treatment is required for connection.

*2 Use 75 °C (167 °F) Cu wire only.

*3 The wire size of UL Open Type and Enclosed Type are common. Please contact us if UL Open Type exclusive wire is necessary.

(cont.)

UL Standards and Canadian Standards (cUL Certification) Compatibility (cont.)

⚠CAUTION

Power supply voltage	Nominal applied motor	Inverter type	HHD/HND/HD/ND mode	Required torque lb-in (N・m) Main terminal	Required torque lb-in (N・m) Aux. control power supply	Wire size AWG (mm²) Main terminal Cu Wire L1/R, L2/S, L3/T 60°C wire	L1/R, L2/S, L3/T 75 °C wire	L1/R, L2/S, L3/T Remarks	U, V, W 60°C wire	U, V, W 75 °C wire	U, V, W Remarks	Aux. control power supply
Three-phase 400 V	0.4	FRN0002G2□-4G	HHD	10.6 (1.2)	–	14 (2.1)	14 (2.1)	*1 *3	14 (2.1)	14 (2.1)	*1 *3	–
	0.75	FRN0003G2□-4G										14 (2.1) *1 *2
	1.5	FRN0004G2□-4G		15.9 (1.8)	10.6 (1.2)							
	2.2	FRN0006G2□-4G										
	3.7	FRN0009G2□-4G										
	5.5	FRN0018G2□-4G	HHD	30.9 (3.5)		–	12 (3.3)	*1 *2 *3	–	12 (3.3)	*1 *2 *3	
	7.5		HND				10 (5.3)					
		FRN0023G2□-4G	HHD									
			HND				8 (8.4)			10 (5.3)		
	11	FRN0035G2□-4G	HHD									
	15		HND							8 (8.4)		
		FRN0041G2□-4G	HHD	51.3 (5.8)		6 (13.3)	6 (13.3)	*3	6 (13.3)	6 (13.3)	*3	
	18.5		HND									
		FRN0045G2□-4G	HHD									
	22		HND			4 (21.2)						
		FRN0060G2□-4G	HHD									
	30		HND			3 (26.7)	4 (21.2)		4 (21.2)			
		FRN0085G2□-4G	HHD	119.4 (13.5)								
	37		HD/HND			2 (33.6)	3 (26.7)		3 (26.7)	4 (21.2)		
		FRN0105G2□-4G	HHD			–	2 (33.6)	*2 *3	2 (33.6)	3 (26.7)		
	45		HD/HND									
		FRN0085G2□-4G	ND						3 (26.7)	4 (21.2)		
		FRN0139G2□-4G	HHD						2 (33.6)	3 (26.7)		
	55		HD/HND				1/0 (53.5)		–	2 (33.6)	*2 *3	
		FRN0105G2□-4G	ND						1 (42.4)			
		FRN0179G2□-4G	HHD						–			
	75		HD/HND							1/0 (53.5)		
		FRN0139G2□-4G	ND									
		FRN0217G2□-4G	HHD	238.9 (27)								
	90		HD				2/0 (67.4)			3/0 (85)		
		FRN0179G2□-4G	ND	119.4 (13.5)								
		FRN0261G2□-4G	HHD	238.9 (27)								
	110		HD				4/0 (107.2)			4/0 (107.2)		
		FRN0217G2□-4G	HND/ND									
		FRN0290G2□-4G	HHD							1/0×2 (53.5×2)		
	132		HD				1/0×2 (53.5×2)			2/0×2 (67.4×2)		
		FRN0261G2□-4G	HND/ND									
	160	FRN0376G2□-4G	HHD	424.7 (48)			3/0×2 (85×2)			4/0×2 (107.2×2)		
			HD									
		FRN0290G2□-4G	HND/ND	238.9 (27)						3/0×2 (85×2)		
		FRN0431G2□-4G	HHD	424.7 (48)						4/0×2 (107.2×2)		

(□:S,E)

Note 1) Control circuit terminal tightening torque: 6.1 lb-in (0.7 N·m), recommended wire size: AWG18 (0.8 mm²)

*1 No terminal end treatment is required for connection.

*2 Use 75 °C (167 °F) Cu wire only.

*3 The wire size of UL Open Type and Enclosed Type are common. Please contact us if UL Open Type exclusive wire is necessary.

(cont.)

UL Standards and Canadian Standards (cUL Certification) Compatibility (cont.)

⚠CAUTION

Power supply voltage	Nominal applied motor	Inverter type	HHD/HND/HD/ND mode	Required torque lb-in (N・m) Main terminal	Required torque lb-in (N・m) Aux. control power supply	Wire size AWG (mm²) Main terminal Cu Wire L1/R, L2/S, L3/T 60°C wire	L1/R, L2/S, L3/T 75°C wire	L1/R, L2/S, L3/T Remarks	U, V, W 60°C wire	U, V, W 75°C wire	U, V, W Remarks	Aux. control power supply
Three-phase 400 V	200	FRN0431G2□-4G	HD	424.7 (48)	10.6 (1.2)	–	4/0×2 (107.2×2)	*2 *3	–	250×2 (127×2)	*2 *3	14 (2.1) *1 *2
		FRN0376G2□-4G	HND							4/0×2 (107.2×2)		
			ND							250×2 (127×2)		
		FRN0547G2□-4G	HHD									
			HD				250×2 (127×2)			300×2 (152×2)		
	220	FRN0431G2□-4G	HND/ND									
		FRN0610G2□-4G	HHD									
	250		HD				300×2 (152×2)			350×2 (177×2)		
	280	FRN0547G2□-4G	HND/ND				400×2 (203×2)			500×2 (253×2)		
		FRN0739G2□-4G	HHD				250×2 (127×2)	*2 *4		300×2 (152×2)	*2 *4	
	315		HD				300×2 (152×2)			350×2 (177×2)		
		FRN0610G2□-4G	HND/ND				500×2 (253×2)	*2 *3		600×2 (304×2)	*2 *3	
		FRN0840G2□-4G	HHD				300×2 (152×2)	*2 *4		350×2 (177×2)	*2 *4	
	355		HD				400×2 (203×2)			400×2 (203×2)		
		FRN0739G2□-4G	HND									
		FRN1039G2□-4G	HHD									
	400		HD				500×2 (253×2)			500×2 (253×2)		
		FRN0739G2□-4G	ND									
		FRN0840G2□-4G	HND									
		FRN1169G2□-4G	HHD									
	450		HD				600×2 (304×2)			600×2 (304×2)		
		FRN0840G2□-4G	ND									
	500	FRN1039G2□-4G	HND				350×3 (177×3)			400×3 (203×3)		
		FRN1385G2□-4G	HHD									
	560		HD				400×3 (203×3)			500×3 (253×3)		
		FRN1039G2□-4G	ND									
		FRN1169G2□-4G	HND									
	630		ND				500×3 (253×3)			600×3 (304×3)		
		FRN1385G2□-4G	HND									
		FRN1480G2□-4G	HHD									
	710		HD/HND				600×3 (304×3)			500×4 (253×4)		
		FRN1385G2□-4G	ND									
	800	FRN1480G2□-4G	ND				500×4 (253×4)					

(.□:S,E)

Note 1) Control circuit terminal tightening torque: 6.1 lb-in (0.7 N·m), recommended wire size: AWG18 (0.8 mm²)

*1 No terminal end treatment is required for connection.

*2 Use 75 °C (167 °F) Cu wire only.

*3 The wire size of UL Open Type and Enclosed Type are common. Please contact us if UL Open Type exclusive wire is necessary.

*4 It is showing the wire size for UL Open Type.
See the additional material "INR-SI47-2433□" for UL Enclosed Type (Pack with TYPE1 kit).

(Finished)

G.4 Compliance with Functional Safety Standards

[1] General

With FRENIC-MEGA Series, the motor coasts to a stop by turning off (opening) the connection between terminals [EN1]-[PLC] or [EN2]-[PLC]. This is a safe shutdown function of Cat. 0 (uncontrolled stop) specified in IEC 60204-1 and complies with the functional safety standards.

When constructing a safety system, a safety shut-off device was required outside the inverter, but using safe torque-off (STO) eliminates the need for an external safety shut-off device.

Table G.4-1 Functional safety performance

EN ISO 13849-1:2015 / ISO 13849-1:2015		
	Category	3
	Performance Level	e
	Average Diagnostic Coverage	Medium (DCavg)
	Response time	50 ms or less (Response time)
	Mean dangerous failure time for each channel	>62 years (MTTFd)
EN 61508-1 to -7 / IEC 61508-1 to -7 EN 61800-5-2 / UL 61800-5-2		
	Safety function	Safe Torque Off (STO)
	Safety integrity level	SIL3
	Hardware Fault Tolerance	1 (HFT)
	Safe failure fraction	90 % or more (SFF)
	Average probability of failure of a hazardous function upon request for actuation	1.58E-05 (PFDavg)
	Mean frequency of hazardous failures [h^{-1}]	2.60E-09 (PFH)
	Mission time	10 yeres

⚠WARNING⚠

- Although the specified STO is used for EN 61800-5-2 / UL 61800-5-2 for the output breaker-off function of this inverter, it does not completely shut off the power supply and the motor electrically. Therefore, depending on the application of the inverter, for the safety of the final user, for example, a mechanically locking brake and motor terminal protection to prevent electric shock are required.
- The output breaker-off function of this inverter does not completely shut off the power supply and the motor electrically. Therefore, turn off the power supply of the inverter securely and wait at least 5 minutes (FRN0003 to 0115G2S-2G/FRN0002 to 0060G2□-4G) / 10 minutes (FRN0146 to 0432G2S-2G/FRN0085 to 1480G2□-4G) before wiring or maintenance work.
- For the synchronous motor (synchronous motor), voltage is generated at the terminal during coasting with the output shut-off function. Make sure that the synchronous motor is stopped securely before performing maintenance, inspection, and wiring.

Caution, risk of electric shock

Pin [EN1][EN2] and Peripheral Circuit and Internal Circuit Configuration

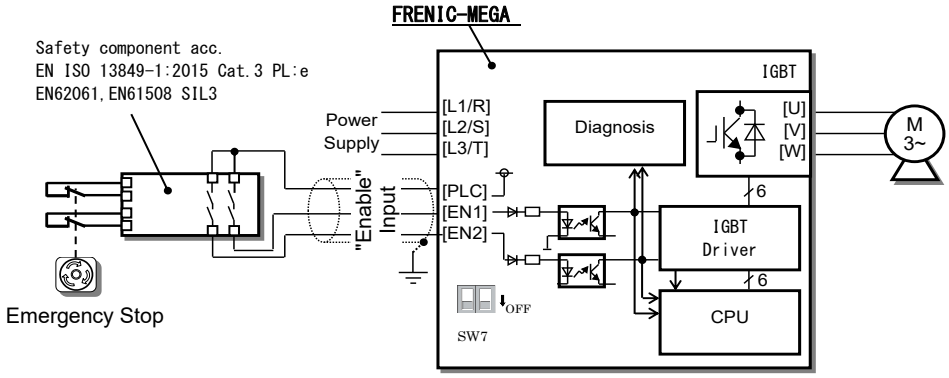

Fig. G.4-1 FRENIC-MEGA

Note When the terminal [EN1] and [EN2] are used as functional safety, turn off both SW7 on the control PCB.

Table G.4-2 State of terminals [EN1][EN2]-[PLC] and inverters

Digital input signal		ECF alarm *	Inverter status	Remarks
[EN1]	[EN2]			
ON (short circuit)	ON (short circuit)	None	Completion of operation preparation	
		Yes	Output shutdown (STO)	Logical mismatch detection *
OFF (open circuit)	OFF (open circuit)	None	Output shutdown (STO)	
		Yes	Output shutdown (STO)	Logical mismatch detection *
ON (short circuit)	OFF (open circuit)	Yes	Output shutdown (STO)	Logical mismatch detection *
OFF (open circuit)	ON (short circuit)	Yes	Output shutdown (STO)	Logical mismatch detection *

*See G.4.[4]

[2] Notes for compliance with functional safety standards

1) Safety Requirements

All of the following requirements must be met in order to comply with functional safety.

1-1) Installation

- Turn off both SW7 on the control PCB.
- Install the inverter in a cabinet with a protective enclosure IP54 or higher.
- To comply with European standard EN 61800-5-2, also comply with the European standard EN 61800-5-1 and EN 61800-3 as inverters or mechanical equipment. For details, refer to “G.1 Compliance with European Standards (CE).”
- To comply with North American standard UL 61800-5-2, also comply with UL 61800-5-1 and IEC 61800-3 as inverters or mechanical equipment. For details on UL 61800-5-1, refer to “G.3 Compliance with UL Standards and Canadian Standards (cUL certification).” For details on IEC 61800-3, refer to “G.1 [1] Compliance with EMC standards.”
- To ensure redundancy, wire the terminals [EN1] and [EN2] independently.
- For ON/OFF of terminals [EN1] and [EN2], use a safety component with EN ISO 13849-1:2015 / ISO 13849-1:2015 Cat.3 PL：e or higher.
- When using an external power supply, use a SELV power supply.

1-2) STO test

- Check that STO operates properly once every three months.

2) Notes for using STO

- When constructing a product safety system in STO, the machinery manufacturer is responsible for the product safety system required by the machinery manufacturer to conduct a risk assessment of the entire machinery equipment, including other equipment, devices, and wires, as well as the external equipment and wires connected to the terminals [EN1][EN2], to ensure that the entire machinery equipment conforms to that product safety system. Also, for preventive maintenance, be sure to perform periodic inspections to confirm that the product safety system operates properly.
- Input short pulses to terminal [EN1] and [EN2] for less than 1 ms when performing a diagnosis with the safety PLC.

  If a single fault is detected in the inverter, an alarm is output to the external device and the inverter coasts the motor even if the terminal [EN1] and [EN2] are ON. (The alarm outputting function is not guaranteed to be outputted with all single faults, but can be adapted to EN ISO 13849-1:2015 / ISO 13849-1:2015 Cat.3 PL:e.)
- The logical discrepancy due to the signal delay between the terminals [EN1] and [EN2] should be 50ms or less. Outputs an ECF alarm when it exceeds 50 ms.

3) Wiring for terminal [EN1], [EN2]

- The terminal [EN1] and [EN2] are used to wire the safety circuitry. Since the reliability is obtained by connecting each signal independently, be careful not to short-circuit the signal in the middle of wiring.

[3] Inverter output status when STO is activated

When the terminal [EN1] and [EN2] are turned OFF, the inverter enters the STO state.

Fig. G.4-2 shows the inverter output status when terminal [EN1] and [EN2] are turned OFF while the inverter is stopped.

The inverter ready status will be complete when the terminal [EN1] and [EN2] inputs turn ON.

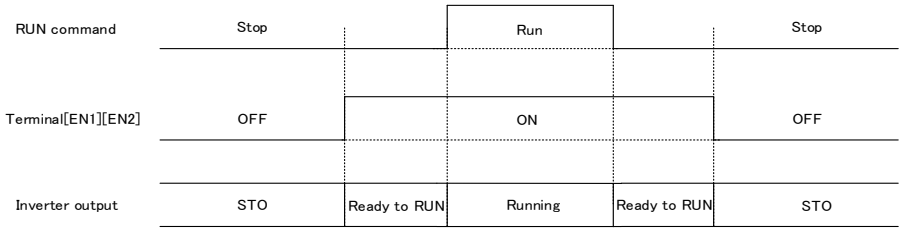

Fig. G.4-2 Inverter output status when terminal [EN1], [EN2] is turned OFF while the inverter is stopped

Fig. G.4-3 shows the timing chart when terminal [EN1] and [EN2] are turned OFF while the inverter is running. Input to terminal [EN1] and [EN2] turns OFF, the inverter enters the STO condition, and the motor coasts to a stop.

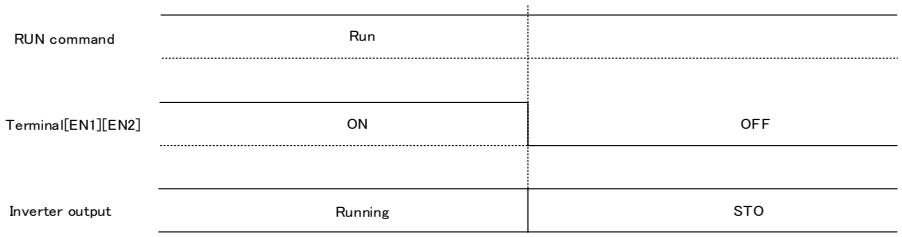

Fig. G.4-3 Inverter output status when terminal [EN1], [EN2] is turned OFF during inverter operation

[4] ECF alarm and inverter-output status

FRENIC-MEGA monitors the logical discrepancy of the signal input to the terminal [EN1] and [EN2], and continuously diagnoses the failure of the safety circuit.

Fig. G.4-4 shows the timing chart for the ECF alarm following a terminal [EN1] or [EN2] input mismatch. A STO condition occurs at the inverter when terminal [EN1] and [EN2] are turned OFF. If the terminal [EN1] and [EN2] input mismatch lasts longer than 50 ms, the inverter will interpret that there is an abnormality with the safely system and output an ECF alarm.

To operate the EN terminal circuit correctly by operating the terminal [EN1] and [EN2], hold ON/OFF of [EN1] and [EN2] for 2 s or more. If it is not held for more than 2 s, an ECF alarm may occur.

In the event of an ECF alarm, it will be necessary the power supply shut off or the alarm reset to cancel the safety status.

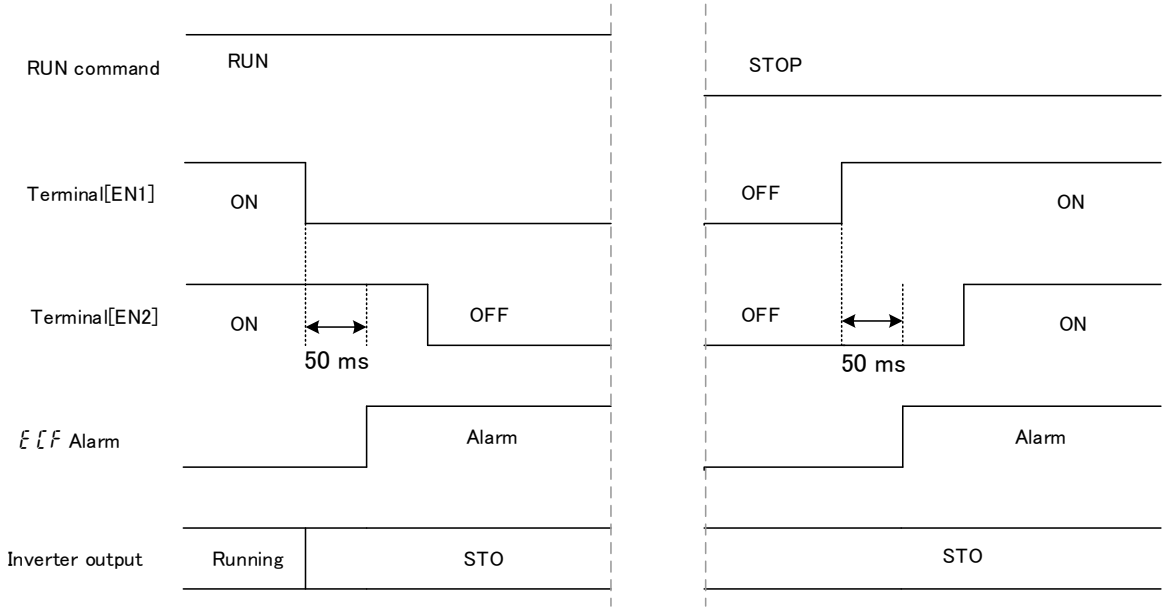

Fig. G. 4-4 ECF alarm (logical mismatch) and inverter-output status

[5] Precautions for releasing STO

If the terminal [EN1] and [EN2] are turned OFF during inverter operation, the inverter forcibly coasts to a stop.

After that, if [EN1] and [EN2] are turned ON with the operation command being input, the inverter restarts the output. Be careful when resetting the safety components. (Fig. G.4-5)

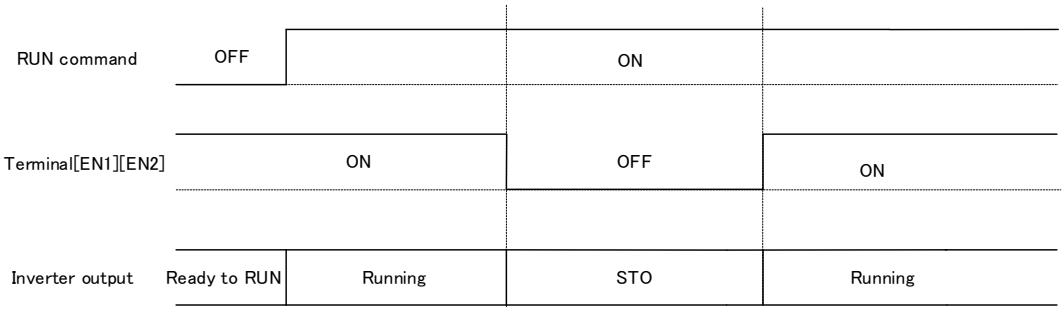

Figure G.4-5 When STO is released

Appendix H Inverter Replacement Precautions (When Using PWM Converter (RHC series))

If using the RHC series and replacing the following inverters, it is necessary to change the connection method for the inverter control power auxiliary input terminals (R0, T0). The replaced inverter may not function normally if the connection method is not changed. Be sure to change the connection method.

H.1 Applicable inverters

Table H.1-1

Applicable inverter (before change)	Replacement inverter (after change)
<FRENIC5000G11S series> · FRN30G11S-2, FRN30P11S-2 inverter or higher · FRN30G11S-4, FRN30P11S-4 inverter or higher <FRENIC-VG7S series> · FRN18.5VG7S-2, FRN18.5VG7S-4 inverter or higher	FRENIC-MEGA series (FRENIC-VG series) (FRENIC-Eco series) (FRENIC-Ace series) (FRENIC-Lift series)

H.2 Changing the connection method (inverter control power auxiliary input terminals (R0, T0))

(1) RHC series: if using ■ RHC7.5-2C to RHC90-2C, ■ RHC7.5-4C to RHC220-4C

Applicable inverter (before change) connection diagram

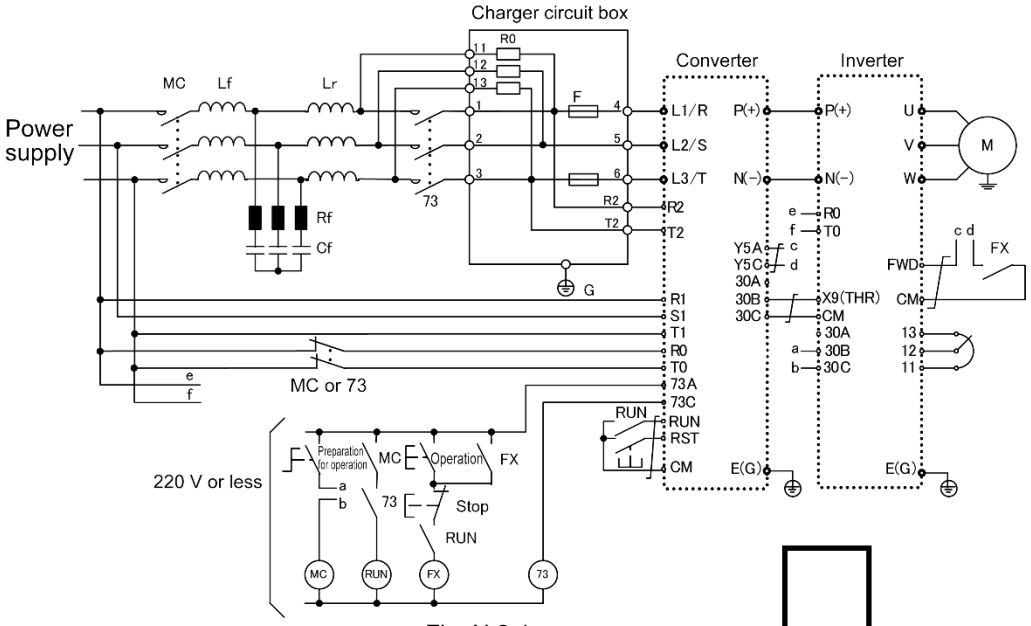

Fig. H.2-1

Replacement inverter (after change) connection diagram

Change the [- - -] section.

1) Inverter control power auxiliary input terminals (R0, T0)
   Be sure to connect to the main power supply via contact b on the power supply circuit electromagnetic contactor (73 or MC).
2) Fan power auxiliary input terminals (R1, T1) * Only on models equipped with R1, T1 terminals
   Be sure to connect to the main power supply without going via contact b on the power supply circuit electromagnetic contactor (73 or MC).

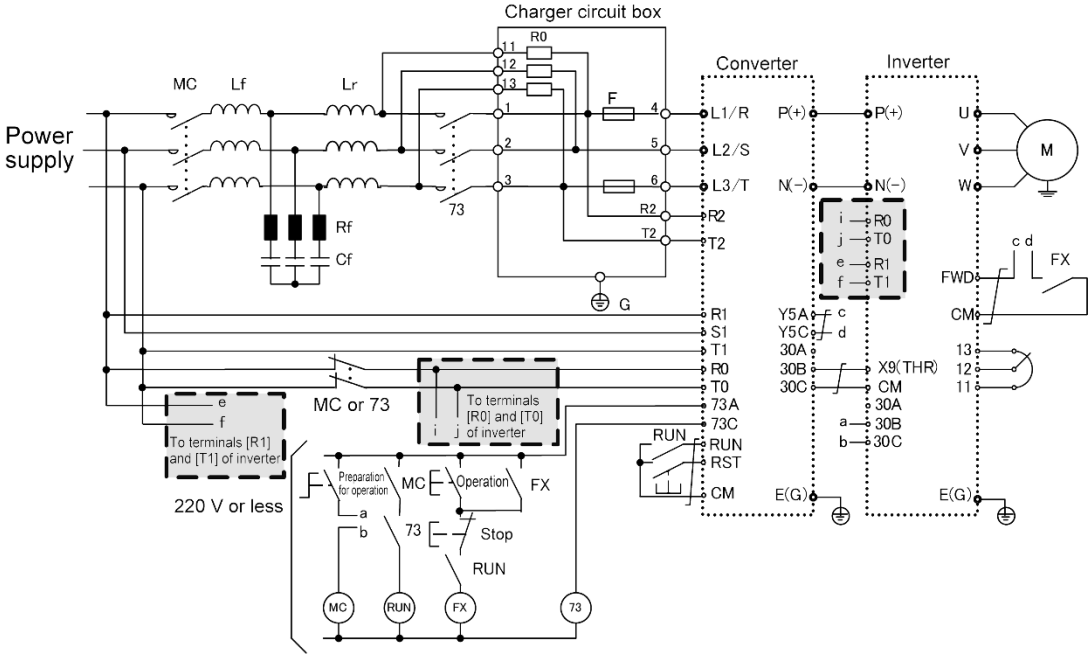

Fig. H.2-2

(2) RHC series: If using when ■ RHC280-4C to RHC630-4C, ■ RHC400-4C VT specification applied
If using ■RHC500B to RHC800B-4C

Applicable inverter (before change) connection diagram

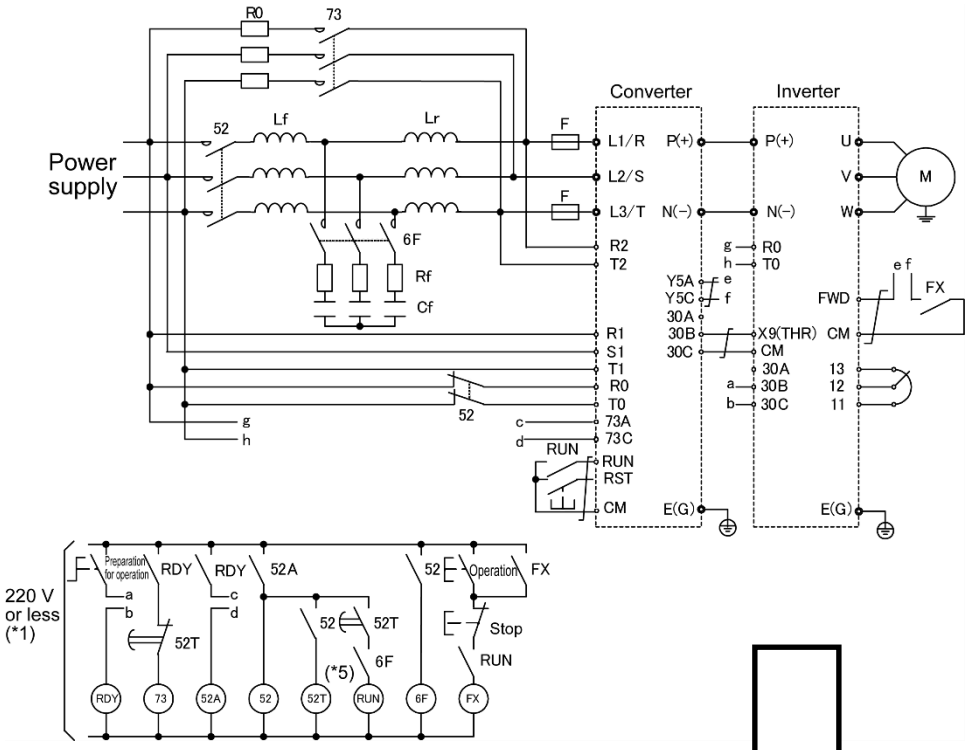

Fig. H.2-3

Replacement inverter (after change) connection diagram

Change the [ ] section.

1) Inverter control power auxiliary input terminals (R0, T0)
Be sure to connect to the main power supply via contact b on the power supply circuit electromagnetic contactor (52).

2) Fan power auxiliary input terminals (R1, T1) * Only on models equipped with R1, T1 terminals
Be sure to connect to the main power supply without going via contact b on the power supply circuit electromagnetic contactor (73 or 52).

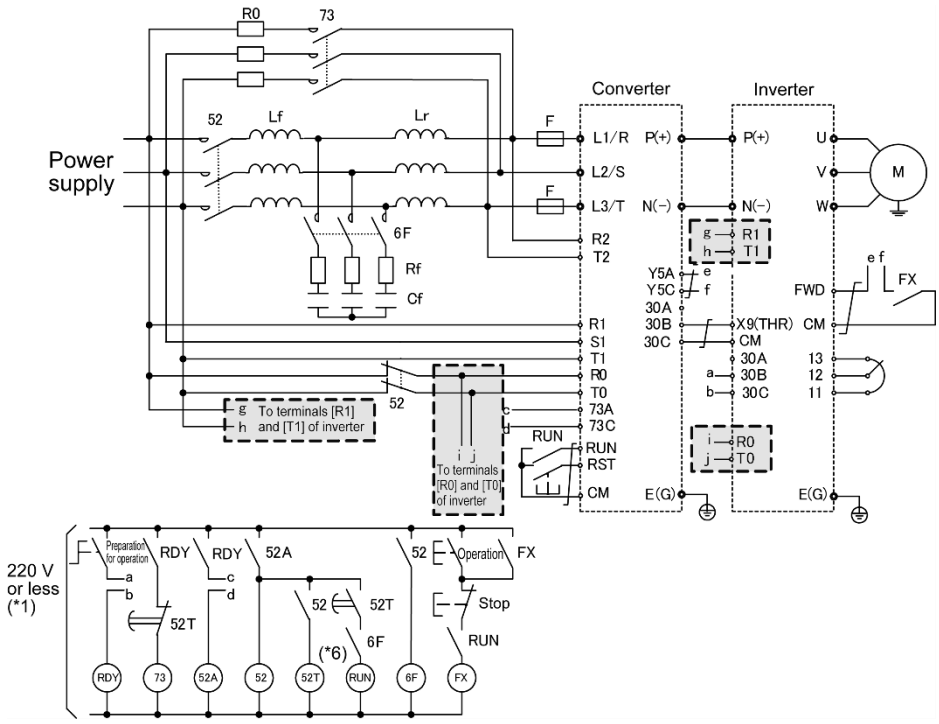

Fig. H.2-4

High-Performance Multi-Function Inverter

FRENIC-MEGA (G2) Series

User's Manual

First Edition February 2022
Third Edition August 2024

Fuji Electric Co., Ltd.

- No part of this manual may be reproduced or copied without prior written permission from Fuji Electric Co., Ltd.
- The content of this manual may be subject to change without notice.
- Every effort has been made to ensure the accuracy of the content of this instruction manual. However, please contact Fuji Electric if there is anything that is unclear, or if any errors or omissions and so on are found.
- Notwithstanding the above, Fuji Electric accepts no responsibility for any adverse effects occurring through the use of this product.

Fuji Electric Co., Ltd.

Gate City Ohsaki, East Tower, 11-2, Osaki 1-chome, Shinagawa-ku, Tokyo, 141-0032, Japan
Phone: +81 3 5435 7058 Fax: +81 3 5435 7420

URL www.fujielectric.com/

2024-08 (H24b/B22) MS 00 FOLS